ARMY TM 9-2355-106-23-4

AIR FORCE TO 36A12-1C-2400-2-4

TECHNICAL MANUAL

FIELD MAINTENANCE MANUAL
FOR

MINE RESISTANT AMBUSH PROTECTED (MRAP)

M1224
(NSN 2355-01-553-4634) (EIC 1XF)

M1224A1
(NSN 2355-01-561-0281) (EIC 1XM)

*

DISCLOSURE NOTICE – This information is furnished upon the condition that it will not be released to another nation without the specific authority of the Department of the Army of the United States, that it will be used for military purposes only, that individual or corporate rights originating in the information, whether patented or not, will be respected, that the recipient will report promptly to the United States, any known or suspected compromise, and that the information will be provided substantially the same degree of security afforded it by the Department of Defense of the United States. Also, regardless of any other markings on the document, it will not be downgraded or declassified without written approval of the originating United States agency.

DISTRIBUTION STATEMENT C – Distribution authorized to U.S. Government Agencies and their contractors only for Specific Authority as determined on 01 August 2012. Other requests for this document shall be referred to TACOM Life Cycle Management Command, ATTN: AMSTA-LCC-MMK, Warren, MI 48397–5000..

WARNING – This document contains technical data whose export is restricted by the Arms Export Control Act (Title 22, U.S.C., Sec 2751, et seq) or the Export Administration Act of 1979, as amended, Title 50, U.S.C., App. 2401 et seq. Violations of these export laws are subject to severe criminal penalties. Disseminate in accordance with provisions of DoD Directive 5230.25.

DESTRUCTION NOTICE – Destroy by any method that will prevent disclosure of contents or reconstruction of contents.

HEADQUARTERS, DEPARTMENTS OF THE ARMY AND AIR FORCE

19 NOVEMBER 2012

WARNING SUMMARY

EXPLANATION OF WARNING ICONS

This warning summary contains general safety warnings and hazardous materials warnings that must be understood and applied during operation and maintenance of this equipment. Failure to observe these precautions could result in serious injury or death to personnel. Also included are explanations of safety and hazardous materials icons used within the technical manual.

FIRST AID

First aid is the emergency care given to the sick, injured, or wounded before being treated by medical personnel. First aid data can be found in FM 4-25.11. This manual contains procedures for all types of casualties and the measures described are for use by all service members. Service members may be able to save a life, prevent permanent disability, or reduce long periods of hospitalization by knowing WHAT to do, WHAT NOT to do, and WHEN to seek medical assistance.

WARNING SUMMARY – (Continued)

EXPLANATION OF GENERAL SAFETY ICONS

EAR PROTECTION – headphones over ears shows that noise level will harm ears.

ELECTRICAL – electrical wire to arm with electricity symbol running through body shows that shock hazard is present.

ELECTRICAL – electrical wire to hand with electricity symbol running through body shows that shock hazard is present.

FALLING PARTS – arrow bouncing off human shoulder and head shows that failing parts present a danger to life or limb.

FLYING PARTICLES – arrows bouncing off face shows that particles flying through air will harm face.

FLYING PARTICLES – arrows bouncing off face with face shield shows that particles flying through the air will harm face.

HEAVY OBJECT – human figure stooping over heavy object shows physical injury potential from improper lifting technique.

HEAVY PARTS – foot with heavy object on top shows that heavy parts can crush and harm.

HEAVY PARTS – heavy object on human figure shows that heavy parts present a danger to life or limb.

WARNING SUMMARY – (Continued)

HEAVY PARTS – heavy object pinning human figure against wall shows that heavy, moving parts present a danger to life or limb.

HELMET PROTECTION – arrow bouncing of head with helmet shows that falling parts present a danger.

HOT AREA – hand over object radiating heat shows that part is hot and can burn.

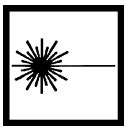

LASER LIGHT – laser light hazard symbol indicates extreme danger for eyes from laser beams and reflections.

MOVING PARTS – human figure with an arm caught between gears shows that the moving parts of the equipment present a danger to life or limb.

MOVING PARTS – hand with fingers caught between gears shows that the moving parts of the equipment present a danger to life or limb.

MOVING PARTS – hand with fingers caught between rollers shows that the moving parts of the equipment present a danger to life or limb.

SHARP OBJECT – pointed object in hand shows that a sharp object presents a danger to life or limb.

SHARP OBJECT – pointed object in hand shows that a sharp object presents a danger to life or limb.

WARNING SUMMARY – (Continued)

SHARP OBJECT – pointed object in foot shows that a sharp object presents a danger to life or limb.

SLICK FLOOR – wavy line on floor with legs prone shows that slick floor presents a danger for falling.

EYE PROTECTION – person with goggles shows that the material will injure the eyes.

GENERAL WARNINGS

WARNING

Before performing any maintenance procedure, ensure vehicle is parked on level surface, engine is off, parking brake is applied, transmission is in NEUTRAL (N), and wheels are chocked. Wear eye protection and stay clear of rotating parts and hot surfaces. Make sure all electrical tools are grounded. Use extreme caution when working under vehicle. Use hydraulic jack to raise vehicle, and place jackstands under frame rails to support axle. Keep first-aid and fire-control equipment available during all operation and maintenance procedures. Failure to comply may result in damage to equipment and serious injury or death to personnel.

WARNING

A/C

Do not install or remove air-conditioning testing or charging equipment while engine is running. Failure to comply may result in serious injury or death to personnel.

WARNING

AIR DRAIN VALVES

WARNING SUMMARY – (Continued)

Air drain valves are under pressure. Wear protective goggles and do not place face in front of air drain valves while draining air reservoirs. Open air drain valves slowly to release air pressure gradually. Failure to comply may result in serious injury or death to personnel.

WARNING

AIR LINES

Do not disconnect any air line or fitting until system pressure has been relieved. Hoses may whip and injure personnel, and air under pressure can penetrate skin. Failure to comply may result in serious injury or death to personnel.

Do not operate vehicle with air pressure system loss. Vehicle has reduced or no braking capability and may not stop. Failure to comply may result in damage to equipment and serious injury or death to personnel.

WARNING

BATTERIES

Wear protective eye goggles, face shield, and long sleeves when working on or near batteries. Batteries contain corrosive acid and can produce explosive gases. Batteries supply electrical current that can cause burns and electrical shock. Always check electrolyte level with engine off. Avoid leaning over or onto battery. Do not wear jewelry and do not smoke or have open flame or spark near battery. Do not allow tools to contact battery box or battery terminals. Failure to comply may result in damage to equipment and serious injury or death to personnel.

Battery acid must not contact eyes, skin, or clothing. If battery acid contacts eyes or skin, flush area with large amounts of water for 15 minutes and seek immediate medical care. If swallowed, do not induce vomiting. Drink large amounts of water or milk. Follow with milk of magnesia, beaten egg, or vegetable oil. Seek immediate medical attention. Failure to comply may result in serious injury or death to personnel.

Disconnect battery ground cable or power source prior to working on electrical components. If electrical shock occurs, administer first aid and seek medical assistance immediately. Failure to comply may result in serious injury or death to personnel.

Ensure batteries are disconnected before removing ESC. Failure to comply may result in serious injury or death to personnel.

WARNING SUMMARY – (Continued)

WARNING

BRAKES (ALSO SEE HAZARDOUS MATERIALS WARNINGS)

Before working on air brake system or any auxiliary pressurized system, make sure air pressure has been drained from all reservoirs. Failure to comply may result in serious injury or death to personnel.

If springs are missing or damaged, replace with new spring hardware kit before installing new brake shoes. Replace brake shoes if there are any signs of overheating, if step on center wear tab of brake shoe lining is not visible, or if thickness on any part of brake shoe is ¼ in. (6 mm) or less. Drums must be turned or replaced if there were any signs of overheating on old brake shoes. Failure to comply may result in damage to equipment and serious injury or death to personnel.

Do not allow grease or oil to contact brake linings. Linings can absorb grease and oil, causing early glazing and reduced braking action. Failure to comply may result in serious injury or death to personnel.

Before removing ABS Control Module, disconnect battery disconnect switch and disconnect batteries. Failure to comply may result in damage to equipment and serious injury or death to personnel.

WARNING

CAB DOOR WINCH STRAPS

Cab doors must be secured in the open position by using heavy duty winch straps to prevent accidental closure during vehicle maintenance. Failure to comply may result in serious injury or death to personnel.

WARNING

COMPRESSED AIR

Do not use compressed air exceeding 30 psi (207 kPa) for cleaning purposes. Use only with effective chip-guarding and personal protective equipment, including goggles or face shield and gloves. Failure to comply could result in serious injury or death to personnel.

WARNING

COOLING SYSTEM/RADIATOR

WARNING SUMMARY – (Continued)

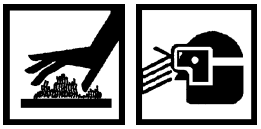

Cooling system components become pressurized and extremely hot during normal operation. To prevent serious injury from hot coolant or scalding steam, use the following safety procedure when removing radiator cap, surge tank cap, or deaeration cap:

- Allow engine to cool for 15 minutes.
- Wrap a thick cloth around cap to be removed.
- Loosen cap slowly one-quarter to one-half turn counterclockwise, and pause to allow pressure to release.
- Continue to turn cap counterclockwise to remove.

Ensure all personnel stay clear of radiator while engine is running. Air in radiator will be released, which may cause hot coolant to spray out. Failure to comply may result in serious injury to personnel.

WARNING

DMM (DIGITAL MULTIMETER)

Ensure power is off before cutting, soldering, or removing a circuit component to insert the Digital Multi-meter (DMM) for current measurements. Even small amounts of current can be dangerous. Failure to comply may result in serious injury to personnel.

When routing DMM leads, do not crimp leads, run leads too close to moving parts, or let leads touch hot engine surfaces. Failure to comply may result in serious injury to personnel.

WARNING

ELECTRICAL

Turn off ignition switch and main power switch before performing electrical system maintenance. Failure to comply may result in serious injury or death to personnel.

Disconnect negative ground cable from batteries before removing any electrical component. Failure to comply may result in serious injury or death to personnel.

Never attempt a voltage measurement with test probe lead in current jack (10A or 300mA). Failure to comply may result in serious injury to personnel.

Shut engine down before performing voltage checks for injector solenoids. When engine is running, injector circuits have high voltage and amperage. Failure to comply may result in serious injury to personnel.

WARNING SUMMARY – (Continued)

Do not use a circuit breaker, fuse, or relay with higher amperage rating than listed for a particular application. Using higher amperage will overheat the electrical circuit, causing melted components and possible fire. Failure to comply may result in damage to equipment and serious injury or death to personnel.

WARNING

ENGINE (ALSO SEE HAZARDOUS MATERIALS WARNINGS.)

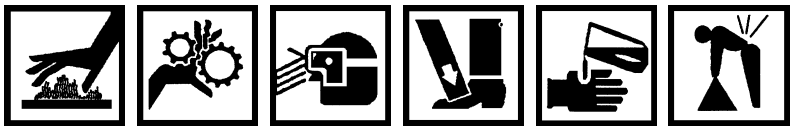

Engine components become extremely hot during normal operation. Allow engine to cool completely prior to performing maintenance. Use extreme care when working in close quarters in engine compartment. Stay clear of rotating parts. Wear safety goggles, work gloves, and long sleeves or shop coat. Failure to comply may result in serious injury or death to personnel.

Some engine components are heavy and bulky and require assistance for lifting. Use assistance of crewmember or lifting device as required. Failure to comply may result in damage to equipment and serious injury to personnel.

Do not rotate diesel engine when priming with oil. This may cause engine to accidentally start. Failure to comply may result in serious injury or death to personnel.

Prior to performing work on crossmember, place wooden block between crossmember and front engine mount. Failure to comply may result in damage to equipment and serious injury to personnel.

WARNING

EMERGENCY HATCH

Emergency hatch door is extremely heavy. Use caution and keep arms, hands, and head clear of hatch when opening or closing. Ensure hatch door is properly secured in both the open or closed position. Do not operate vehicle with emergency roof hatch open. Failure to comply may result in serious injury or death to personnel.

Use lifting device capable of lifting 1000 lbs to lift emergency hatch from vehicle. Clear all nonessential personnel from area when lifting hatch from vehicle. Do not stand directly under hatch door while lowering to floor. Failure to comply may result in damage to equipment and serious injury or death to personnel.

WARNING

EXHAUST

WARNING SUMMARY – (Continued)

Exhaust system components can be hot. Do not touch with bare hands or allow contact with other skin surface. Wear protective work gloves and long sleeves. Do not use exhaust tailpipe as a step. Failure to comply may result in damage to equipment and serious injury or death to personnel.

WARNING

FAN BLADE

Do not attempt to restrict fan blade rotation during engine operation. Improper use of application or modification of fan drive or fan can damage fan drive. Do not operate vehicle with malfunctioning or damaged fan drive or fan blades. Failure to comply may result in damage to equipment and serious injury to personnel.

WARNING

FSS (FIRE SUPPRESSION SYSTEM)

Before installing FSS extinguisher, verify correct part number is being installed. Check for visible damage to the canister, such as dents, cracked plastic, chips, or scratches where hoses connect. If damage is visible anywhere, do not use; contact your supervisor. Failure to comply may result in damage to equipment and serious injury or death to personnel.

Prior to servicing FSS, make sure FSS power is off, main power switch is off, unless otherwise instructed. If damage is visible, anywhere, do not use. Contact your supervisor. Failure to comply may result in discharging of system and serious injury or death to personnel.

Before handling extinguisher, make sure anti-recoil plug is installed in valve outlet port and mechanical lever lockpin is installed in lever lock holes. Failure to comply may result in damage to equipment and serious injury or death to personnel.

Some fire suppression systems have a safety pin to install before disconnecting lines. Check to see if system uses a safety pin and install it before disconnecting lines. When disconnecting the extinguisher lines, use extreme caution. Do not disturb the pyrotechnic actuator and pressure switch; this will cause the extinguisher to discharge automatically. Failure to comply may result in damage to equipment and serious injury or death to personnel.

WARNING SUMMARY – (Continued)

Do not drop or strike FSS extinguisher. Extinguisher can discharge accidentally and chemical agent can escape through holes in side of ant-recoil plug. Failure to comply may result in damage to equipment and serious injury or death to personnel.

Do not release extinguisher bottle band clamps unless anti-recoil plug is installed in valve outlet port and mechanical lever lockpin is installed in lever lock holes. Failure to comply may result in personal injury or death, or damage to equipment.

FSS extinguisher can move violently when discharging. Ensure extinguisher is properly secured during use. Failure to comply may result in damage to equipment and serious injury or death to personnel.

Replace fire extinguisher immediately after use, even if only partly used. Failure to comply may result in serious injury or death to personnel.

Exposure to large quantities of dry chemical fire extinguisher in cab may result in temporary breathing difficulty during and immediately after discharge. If possible, discharge fire extinguisher from outside cab. Ventilate and wash cab thoroughly prior to reentry. If respiratory irritation or distress occurs, move victim to fresh air. Seek medical attention if irritation persists.

Chemical fire suppression agents are refrigerants and can freeze skin. Extinguisher will be extremely cold after discharging. Avoid contact with chemical agent and do not touch extinguisher after use. Failure to comply may result in serious personal injury.

WARNING

FUEL LINES/PUMP

Do not loosen fuel lines at filter housing to bleed fuel system. Periodic loosening of fittings will result in increased thread wear. Failure to comply may result in damage to equipment and serious injury or death to personnel.

Do not overtighten bolts for fuel pump or cross-thread connections on fuel lines. This will interfere with sealing and operation of fuel pump. If seal is not complete or lines leak due to cross-threads, fuel pump will not operate properly and vehicle may not run. Starting vehicle without fuel pressure in lines or pump may result in damage to equipment and serious injury or death to personnel.

WARNING

GUNNER HATCH

WARNING SUMMARY – (Continued)

Gunner hatch is extremely heavy. Use caution when opening and closing. Wear safety goggles when removing, installing, or working on interior of gunner hatch. Keep arms and hands clear of gunner hatch when closing. Failure to comply may result in damage to equipment and serious injury or death to personnel.

Gunner sliding hatch can only be opened or closed when vehicle is stationary and on level surface. Do not attempt to open or close the hatch when vehicle is in motion. Make sure latch locks are secured into place in the open or closed positions before vehicle starts moving. Failure to comply may result in damage to equipment and serious injury or death to personnel.

Ensure gunner hatch is completely locked in open position before moving vehicle with gunner in position. Use extreme caution when standing in gunner hatch while vehicle is in motion. Gunner should be holding onto weapon or other support to maintain stability at all times. Failure to comply may result in serious injury or death to personnel.

WARNING

HEATSHRINK TUBING

Never use open flame to apply heat to heatshrink tubing. Allow heatshrink tubing to cool before handling. Failure to comply may result in serious injury to personnel.

WARNING

HEAVY LIFTING

Prior to moving heavy components with lifting device, clear path of travel and clear personnel from area. Use extreme caution if lifting objects overhead or backing up. Stop and lower load as soon as possible. Failure to comply may result in damage to equipment and serious injury or death to personnel.

WARNING

HOOD

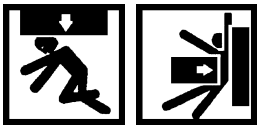

Hood is extremely heavy. Ensure there is adequate space to open hood completely without pinning personnel between hood and another structure. Use extreme care when working under hood and make sure it is properly supported. Failure to comply may result in serious injury or death to personnel.

WARNING SUMMARY – (Continued)

WARNING

INSTRUMENT PANEL

The instrument panel is bulky and heavy and cannot be removed by one person. Before removing the side A-pillar mounting bolts, obtain assistance for remainder of removal. Failure to comply may result in damage to equipment and serious injury or death to personnel.

WARNING

JACKS

Before lifting vehicle off ground, make sure it is parked on level surface. Set parking brake and chock wheels. Use hydraulic jack to lift vehicle. Do not use jack alone to support vehicle. Never work under or near a vehicle supported only by jack or lifting device. Use rated jackstands under frame rails to properly support vehicle. Do not support vehicle under front and rear axles. Use additional jackstands as necessary to support vehicle components during removal and installation procedures. Failure to comply may result in damage to equipment and serious injury or death to personnel.

WARNING

LITTER

Keep personnel clear of litter-lift moving parts. Ensure litters and patients are properly secured and clear of rear door/ramp and all other obstacles during litter-lift movement. Failure to comply may result in serious injury or death to personnel.

Hold litter stub and connector plate up while removing or installing hex-head screws from bracket. If connector plate and stub fall and slide down stainless sliding rail, serious damage to parts may occur. Failure to comply may result in serious injury or death to personnel.

WARNING

PITMAN ARM

Pitman arm will be extremely tight. Do not pound on pitman arm or apply heat to pitman arm or sector shaft. Never weld pitman arm or sector shaft. Failure to comply may result in damage to equipment and serious injury or death to personnel.

WARNING SUMMARY – (Continued)

Proper installation of pitman is critical to vehicle safety. Install pitman arm after steering gear is mounted on vehicle so proper torque can be applied to pitman arm. Otherwise, pitman arm could loosen and cause an accident. If pitman arm is loose, replace pitman arm and sector shaft. Always use a new tab lock retainer. If tabs and notches do not line up, tighten beyond specified torque value until two tabs align. Never back off retainer to align retaining tabs. Failure to comply may result in damage to equipment and serious injury or death to personnel.

When installing new cotter pin, tighten nut until slot appears and insert cotter pin. Never back off nut to install cotter pin. Failure to comply may result in damage to equipment and serious injury or death to personnel.

WARNING

REAR CABIN DOOR/RAMP

Rear cabin door/ramp is heavy. Make sure door/ramp /is secured so it will not move. Failure to comply may result in serious personal injury or death to personnel.

Ensure no one is behind vehicle when lowering rear door/ramp. Use extreme caution when using emergency rear door/ramp release, to ensure no one is struck by door as it falls open. Keep arms and legs clear of rear door/ramp when closing. Do not operate rear door/ramp when vehicle is in motion. Failure to comply may result in serious injury or death to personnel.

Attach a lifting device and sling to rear door/ramp prior to removing mounting bolts. Failure to comply may result in damage to equipment and serious injury or death to personnel.

Rear door/ramp is heavy. Ensure lifting device and sling are in place prior to removing rear door/ramp mounting bolts. Failure to comply may result in serious injury or death to personnel.

WARNING

RIFLES

Remove rifles from rifle racks being worked on. Ensure rifles are not loaded and store in safe manner. Failure to comply may result in serious injury or death to personnel.

WARNING

TOWING EYES

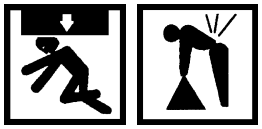

Do not remove both rear towing eyes at the same time, Entire rear frame crossmember assembly will fall. Replace one towing eye at a time. Failure to comply may result in damage to equipment and serious injury or death to personnel.

WARNING SUMMARY – (Continued)

WARNING

TRANSFER CASE

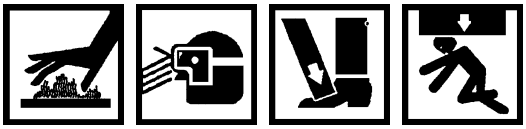

During normal vehicle operation, transfer case and oil cooler can become very hot. Allow transfer case and oil cooler to cool prior to servicing oil cooler. Wear safety goggles, work gloves, and protective clothing. Use extreme caution when opening drain valves and removing bolts. Failure to comply may result in serious injury to personnel.

WARNING

TRANSMISSION

Use care when working with hot transmission and fluid during maintenance procedures. Wear protective goggles, work gloves, and long sleeves to avoid injury. Avoid contact with hot transmission oil or sump when draining transmission oil. If transmission oil temperature is above 220°F (104°C), allow transmission oil to cool before removing dipstick. Failure to comply may result in serious injury or death to personnel.

WARNING

WHEELS/TIRES

Wheel and tire assemblies are heavy. Do not attempt to lift wheel and tire assemblies without assistance from crewmember. Wear safety goggles and work gloves. Failure to comply may result in damage to equipment and serious injury or death to personnel.

Ensure vehicle is parked on hard, level surface before changing wheel and tire assembly. Soft or uneven ground may cause jack or jackstand to slip, resulting in damage to equipment and serious injury or death to personnel.

EXPLANATION OF HAZARDOUS MATERIALS ICONS

WARNING SUMMARY – (Continued)

BIOLOGICAL – abstract symbol bug shows that a material may contain bacteria or viruses that present a danger to life or health.

CHEMICAL – drops of liquid on hand shows that the material will cause burns or irritation to human skin or tissue.

CRYOGENIC – hand in block of ice shows that the material is extremely cold and can injure human skin or tissue.

EXPLOSION – rapidly expanding symbol shows that the material may explode if subjected to high temperatures, sources of ignition or high pressure.

FIRE – flame shows that a material may ignite and cause burns.

POISON – skull and crossbones shows that a material is poisonous or is a danger to life.

RADIATION – three circular wedges shows that the material emits radioactive energy and can injure human tissue.

VAPOR – human figure in a cloud shows that material vapors present a danger to life or health.

WARNING

ANTI-SEIZE COMPOUND

WARNING SUMMARY – (Continued)

Anti-seize compound is flammable and toxic. Container may explode from excessive heat. Vapors can cause headache, dizziness, unconsciousness, corneal injury, and respiratory tract irritation. Use only in well-ventilated area. Use approved respirator with dual organic vapor/mist and particulate cartridge. Wear chemical safety goggles and full-face shield when using. Avoid contact with skin and wear rubber or plastic, solvent-resistant gloves. In case of contact, remove contaminated clothing and immediately wash area with soap and water. If compound contacts eyes, flush eyes with large amounts of water for at least 15 minutes and obtain immediate medical attention. If swallowed, do not induce vomiting; obtain immediate medical attention. Failure to comply may result in serious injury or death to personnel.

WARNING

ASBESTOS

Brake dust contains asbestos, a known health hazard. Always wear safety goggles and an approved respirator during all brake service procedures. Wear respirator during removal of wheels through assembly. Handle all brake parts with care; brake dust covers all brake parts. Failure to comply may result in serious injury or death to personnel.

Never use compressed air or dry brushing to clean brake parts or assemblies. Use an industrial vacuum cleaner with a HEPA filter system to clean dust from brake drums, backing plates, and other brake parts. After vacuuming, remove any remaining dust with a rag soaked in water and wrung until nearly dry. Carefully clean parts in a well-ventilated or open-air area. During brake disassembly, carefully place all parts on the floor to avoid getting dust into the air. Do not use compressed air to clean clothing after working on brakes; use vacuum with HEPA filter system. Failure to comply may result in serious injury or death to personnel.

WARNING

CARBON MONOXIDE

Carbon monoxide is a colorless, odorless, and dangerous gas that deprives the body of oxygen and causes suffocation. Use the following precautions to avoid carbon monoxide poisoning. Failure to comply may result in permanent brain damage or death to personnel.

- Do not idle engine for long periods of time.
- If necessary to run engine in confined area during vehicle service, use proper equipment to vent exhaust gasses outside work area.
- Do not operate personnel heater in enclosed area without adequate ventilation.
- Turn auxiliary diesel heater switch off before filling any fuel tank on vehicle.
- Do not sleep in vehicle with heater operating or engine idling.
- Notify Field Maintenance if exhaust fumes are detected in crew compartment while operating the vehicle.
- Be alert at all times for exhaust odors and symptoms of exposure to carbon monoxide, such as headaches, dizziness, loss of muscular control, apparent drowsiness, and coma. If symptoms are evident, move affected personnel to fresh air, keep them warm, do not permit physical exercise, administer artificial respiration (if necessary), and seek immediate medical attention.

WARNING

WARNING SUMMARY – (Continued)

CARC (CHEMICAL AGENT RESISTANT COATING)

Vehicles are finished with a chemical agent resistant coating (CARC). CARC contains isocyanates, which are highly irritating to skin and respiratory system. Breathing CARC vapor or dried paint dust can cause coughing, shortness of breath, burning sensation in throat and nose, watering of eyes, pain during respiration, and chest tightness. Skin contact with particulates can cause itching or redness of skin. Sensitivity to isocyanates may increase from repeated exposure. Use the following precautions to prevent injury from exposure. Failure to comply may result in serious injury to personnel.

• Never weld or cut CARC coated surfaces. Grinding or sanding CARC coated surfaces will create harmful dust.

• Personnel who have lung or breathing problems or who have had a reaction to isocyanates must not be in any area where CARC painting operations are performed or CARC dust particles are present.

• CARC painting operations must be performed only by qualified painters wearing protective gear and respirators and working in fully equipped facilities. All personnel in the area must wear high-efficiency air purifying respirators, protective goggles, gloves, and other protective clothing. Thoroughly wash all clothing before reuse.

WARNING

CLEANING SOLVENTS

Adhesives, solvents, and sealing compounds can burn easily, can give off harmful vapors, and are harmful to skin and clothing. Wear goggles and protective clothing. Keep away from open flame and use in well-ventilated area. If adhesive, solvent, or sealing compound get on skin or clothing, wash immediately with soap and water. Failure to comply may result in injury or death to personnel.

WARNING

CONNECTOR LUBRICANT

Connector lubricant is harmful to skin and eyes. If lubricant contacts eyes, rinse thoroughly and contact physician if irritation persists. If skin is contacted, wash thoroughly with soap and water. Failure to comply may result in serious injury to personnel.

WARNING

CORROSION PREVENTIVE COMPOUND

WARNING SUMMARY – (Continued)

Corrosion preventive compound is toxic. Use only in well-ventilated area. Use approved respirator with dual organic vapor/mist and particulate cartridge. Do not get in eyes; wear chemical safety goggles and full-face shield when using. Avoid contact with skin and wear rubber or plastic, solvent-resistant gloves. In case of contact, remove contaminated clothing and immediately wash area with soap and water. If compound contacts eyes, flush eyes with large amounts of water for at least 15 minutes and get immediate medical attention. If swallowed, do not induce vomiting; contact a physician immediately. Failure to comply may result in serious injury or death to personnel.

WARNING

DIELECTRIC GREASE

Dielectric grease is harmful to skin and eyes. If grease contacts eyes, rinse thoroughly and contact physician if irritation persists. If skin is contacted, wash thoroughly with soap and water. Failure to comply may result in serious injury to personnel.

WARNING

ETHER CANISTER

Ether canisters contain hazardous, combustible and flammable materials. Handle with care and dispose of in accordance with standard operating procedures. Use approved respirator with dual organic vapor/mist and particulate cartridge. Avoid contact with skin and eyes, and avoid breathing fumes. If swallowed, do not induce vomiting. Obtain immediate medical attention. Failure to comply may result in serious injury or death to personnel.

Ether canisters are pressurized, combustible and flammable. Keep away from flames and sparks. Do not incinerate or puncture canister. Do not expose to temperatures above 120°F (49°C). Do not store spare canister in vehicle cab. Failure to comply may result in serious injury or death to personnel.

WARNING

ENGINE FLUIDS

Engine fluids (oil, fuel, and coolant) may flammable and may be hazardous to human health and the environment. Handle all fluids and other contaminated materials (such as filters and rags) in accordance with standard operating procedures. Recycle or dispose of engine fluids, filters, and other contaminated materials in accordance with standard operating procedures. Failure to comply may result in environmental damage and injury to personnel.

WARNING

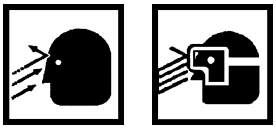

WARNING SUMMARY – (Continued)

FIBERGLASS

Direct contact with fiberglass materials or exposure to airborne fiberglass dust may irritate skin, eyes, nose, and throat. Minimize exposure to fiberglass particles by wearing long sleeves and long pants, work gloves, hat, and face shield or safety goggles with side shields. Personnel who experience irritation or have a known sensitivity should wear an approved particulate respirator. After working with fiberglass materials, wash skin with soap and running water and change clothing before touching eyes. Failure to comply may result in injury to personnel.

WARNING

FUEL

Fuel is flammable and can explode. Keep all open flames, flammable materials, ignition sources, and sparks away from diesel fuel and keep fire extinguisher nearby. Do not smoke when working with fuel. Do not work on fuel system when engine is hot. Fuel can be ignited by hot engine. Failure to comply may result in serious injury or death to personnel.

Be alert at all times for the smell of fuel. Hot engines and components can ignite fuel. If fuel smell is detected while operating vehicle, shut down vehicle immediately. Failure to comply may result in damage to equipment and serious injury or death to personnel.

Store diesel fuel in an approved container clearly marked DIESEL FUEL or JP-8, accordingly. Dispose of fuel in an approved container clearly marked DIESEL FUEL or JP-8, accordingly, in accordance with standard operating procedures.

Never use diesel fuel or JP-8 to clean parts. Fuel is highly flammable. Failure to comply may result in damage to equipment and serious injury or death to personnel.

WARNING

HYDRAULIC FLUID

Hydraulic fluid is flammable and harmful to skin and eyes. Wear work gloves and eye protection when handling fluids. Do not perform maintenance while smoking or near flame or sparks. If fluid contacts skin, wash affected area immediately. In case of eye contact, flush with water for 15 minutes and seek medical care immediately. Dispose of hydraulic fluid in accordance with standard operating procedures. Failure to comply may result in serious injury to personnel.

WARNING

NBC (NUCLEAR, BIOLOGICAL, and CHEMICAL) SYSTEM

NBC system maintenance procedures require at least two personnel due to risk of medical emergency from possible exposure to NBC agents. Maintenance must be performed by properly trained, authorized personnel with proper safety equipment and protective clothing. Make sure batteries are disconnected and

WARNING SUMMARY – (Continued)

area is well ventilated. Do not smoke or allow open flame near vehicle. Never operate system with cover or panel removed. Failure to comply may result in serious injury or death to personnel.

WARNING

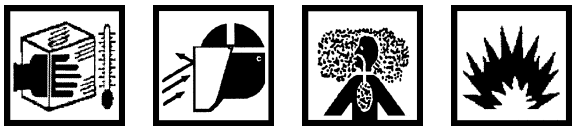

REFRIGERANT

Do not expose refrigerant containers, empty or full, to open flames or temperatures above 125°F (52°C). Do not discard empty containers where they may be subject to heat from a trash burner; containers may explode. Failure to comply may result in damage to equipment and serious injury or death to personnel.

The temperature of liquid refrigerant is -20°F (-29°C). Wear full face shield, protective rubberized gloves, and protective clothing when working with refrigerant. If refrigerant contacts skin, remove all contaminated clothing. Treat skin as though it were frostbitten or frozen and seek immediate medical attention. If refrigerant contacts eyes, do not rub them. Flush eyes with cold water for at least 15 minutes to gradually increase temperature above freezing point. Seek immediate medical attention. Failure to comply may result in serious injury or death to personnel.

Refrigerant becomes a poisonous gas in the presence of heat. Do not smoke or allow any type of flame in immediate area while servicing air conditioning system. Never weld, solder, steam clean, or use excessive heat on any part of the air conditioning system while charged/pressurized. Failure to comply may result in damage to equipment and serious injury or death to personnel.

R-134a refrigerant must not be mixed with air and then pressurized. When mixed with large quantities of air and pressurized, R-134a becomes combustible. Failure to comply may result in damage to equipment and environment, and serious injury or death to personnel.

Refrigerant evaporates very quickly and may displace oxygen surrounding work area, especially in a small or enclosed area. This can cause suffocation or brain damage. If leak occurs, avoid breathing refrigerant vapor and thoroughly ventilate area before continuing service. If personnel breathe refrigerant vapors, obtain immediate medical assistance. Failure to comply may result in serious injury or death to personnel.

Federal and state laws require that refrigerant be recovered and recycled. Refrigerant must be recovered from system with authorized recommended equipment before any work can be performed on unit. Always use approved recycling equipment to prevent accidental discharge. Failure to comply may result in damage to equipment and environment, and serious injury or death to personnel.

WARNING

HVAC SYSTEM

Do not check compressor oil level when HVAC system is charged with refrigerant. Never open the high side hand valve of the manifold gauge set while HVAC system is operating. If hot, high pressure refrigerant is forced through gauge to refrigerant supply cylinder, which could rupture. Do not disconnect HVAC lines from compressor. Release of refrigerant may cause damage to equipment or environment and serious injury or death to personnel.

Do not use parts other than those specified for the system being serviced. Failure to comply may result in damage to equipment and serious injury or death to personnel.

Accidental or intentional introduction of liquid contaminants into the environment is a violation of state, federal, and military regulations. Store, install, and dispose of containers in accordance with standard operating procedures.

WARNING SUMMARY – (Continued)

Refer to Army POL (para. 1-8) for information concerning storage, use, and disposal of liquid contaminants. Failure to comply may result in damage to environment and serious injury or death to personnel.

WARNING

SILICONE GASKET MATERIAL

Silicone gasket material emits a small amount of acid vapor. Ensure work area is well ventilated. Read and carefully follow manufacturer's instructions before use. If silicone gasket material contacts eyes, follow manufacturer's emergency procedures. Seek medical assistance as soon as possible. Failure to comply may result in serious injury to personnel.

WARNING

SILICONE GREASE

Silicone grease is harmful to skin and eyes. If silicone grease contacts eyes, rinse thoroughly and contact physician if irritation persists. If skin is contacted, wash thoroughly with soap and water. Failure to comply may result in serious injury to personnel.

WARNING

THREAD SEALING COMPOUND

Thread sealing compound is harmful to skin and eyes. If thread sealing compound contacts eyes, rinse thoroughly and contact physician if irritation persists. If skin is contacted, wash thoroughly with soap and water. Failure to comply may result in serious injury to personnel.

LIST OF EFFECTIVE PAGES/WORK PACKAGES

NOTE:

Zero in the “Change No.” column indicates an original page or work package.

Date of issue for original manual is:

Original 19 November 2012

THE TOTAL NUMBER OF FRONT AND REAR PAGES IS 78, AND THE TOTAL NUMBER OF WORK PACKAGES IS 213, CONSISTING OF THE FOLLOWING:

LIST OF EFFECTIVE PAGES/WORK PACKAGES

LIST OF EFFECTIVE PAGES/WORK PACKAGES

C/blank

HEADQUARTERS, DEPARTMENTS OF THE ARMY AND AIR FORCE
WASHINGTON, D.C., 19 NOVEMBER 2012

TECHNICAL MANUAL

FIELD MAINTENANCE MANUAL
FOR
MINE RESISTANT AMBUSH PROTECTED (MRAP)

M1224
(NSN 2355-01-553-4634) (EIC 1XF)

M1224A1
(NSN 2355-01-561-0281) (EIC 1XM)

REPORTING ERRORS AND RECOMMENDING IMPROVEMENTS

(A) Army - You can help improve this publication. If you find any errors, or if you would like to recommend any improvements to the procedures in this publication, please let us know. The preferred method is to submit your DA Form 2028 (Recommended Changes to Publications and Blank Forms) through the Internet, on the TACOM unique Logistics Support Applications (TULSA) Web site. The Internet address is https://tulsa.tacom.army.mil. Access to all applications requires CAC authentication, and you must complete the Access Request form the first time you use it. The DA Form 2028 is located under the TULSA Applications on the left-hand navigation bar. Fill out the form and click on SUBMIT. Using this form on the TULSA Web site will enable us to respond more quickly to your comments and to better manage the DA Form 2028 program. You may also mail, e-mail, or fax your comments or DA Form 2028 directly to the U.S. Army TACOM Life Cycle Management Command. The postal mail address is U.S. Army TACOM Life Cycle Management Command, ATTN: AMSTA-LCL-MPP/ TECH PUBS, MS 727, 6501 East 11 Mile Road, Warren, MI 48397–5000. The e-mail address is tacomlcmc.daform2028@us.army.mil. The fax number is DSN 786-1856 or Commercial (586) 282-1856. A reply will be furnished to you.

(F) Air Force - By Air Force AFTO Form 22 directly to Warner Robins, Tech Data Home office, 584 CBSS/GBHDE, 480 Richard Ray Blvd Ste 200, Robins AFB GA 31098-1640. You may also send in your recommended changes via electronic mail or by fax. Our fax number is DSN 472-3104 or Commercial (478) 222-3104. Forward all electronic AFTO 22 submissions to the following mail account: Robins.ce.afto22@robins.af.mil. Recommendations concerning changes to this manual shall be submitted in accordance with TO 00-5-1-WA-1.

DISCLOSURE NOTICE – This information is furnished upon the condition that it will not be released to another nation without the specific authority of the Department of the Army of the United States, that it will be used for military purposes only, that individual or corporate rights originating in the information, whether patented or not, will be respected, that the recipient will report promptly to the United States, any known or suspected compromise, and that the information will be provided substantially the same degree of security afforded it by the Department of Defense of the United States. Also, regardless of any other markings on the document, it will not be downgraded or declassified without written approval of the originating United States agency.

DISTRIBUTION STATEMENT C – Distribution authorized to U.S. Government Agencies and their contractors only for Specific Authority as determined on 01 August 2012. Other requests for this document shall be referred to TACOM Life Cycle Management Command, ATTN: AMSTA-LCC-MMK/TECH PUBS, Warren, MI 48397–5000.

WARNING – This document contains technical data whose export is restricted by the Arms Export Control Act (Title 22, U.S.C., Sec 2751, et seq) or the Export Administration Act of 1979, as amended, Title 50, U.S.C., App. 2401 et seq. Violations of these export laws are subject to severe criminal penalties. Disseminate in accordance with provisions of DoD Directive 5230.25.

DESTRUCTION NOTICE – Destroy by any method that will prevent disclosure of contents or reconstruction of contents.

TABLE OF CONTENTS

Page No.
WP Sequence No.

VOLUME 4

TABLE OF CONTENTS – (Continued)

TABLE OF CONTENTS – (Continued)

TABLE OF CONTENTS – (Continued)

TABLE OF CONTENTS – (Continued)

TABLE OF CONTENTS – (Continued)

TABLE OF CONTENTS – (Continued)

TABLE OF CONTENTS – (Continued)

TABLE OF CONTENTS – (Continued)

TABLE OF CONTENTS – (Continued)

TABLE OF CONTENTS – (Continued)

TABLE OF CONTENTS – (Continued)

TABLE OF CONTENTS – (Continued)

TABLE OF CONTENTS – (Continued)

TABLE OF CONTENTS – (Continued)

TABLE OF CONTENTS – (Continued)

TABLE OF CONTENTS – (Continued)

TABLE OF CONTENTS – (Continued)

TABLE OF CONTENTS – (Continued)

TABLE OF CONTENTS – (Continued)

TABLE OF CONTENTS – (Continued)

TABLE OF CONTENTS – (Continued)

TABLE OF CONTENTS – (Continued)

TABLE OF CONTENTS – (Continued)

TABLE OF CONTENTS – (Continued)

TABLE OF CONTENTS – (Continued)

TABLE OF CONTENTS – (Continued)

TABLE OF CONTENTS – (Continued)

TABLE OF CONTENTS – (Continued)

TABLE OF CONTENTS – (Continued)

TABLE OF CONTENTS – (Continued)

TABLE OF CONTENTS – (Continued)

TABLE OF CONTENTS – (Continued)

TABLE OF CONTENTS – (Continued)

TABLE OF CONTENTS – (Continued)

TABLE OF CONTENTS – (Continued)

0394

CHAPTER 8

MAINTENANCE INSTRUCTIONS

FOR

MINE RESISTANT AMBUSH PROTECTED (MRAP)

FIELD MAINTENANCE

TRANSFER CASE VEHICLE SPEED SENSOR (VSS) REMOVAL AND INSTALLATION

INITIAL SETUP:

Tools and Special Tools
General Mechanic's Tool Kit (GMTK) (WP 0795, Item 37)

Materials/Parts
Grease (WP 0794, Item 22)

References
TM 9-2355-106-10
TM 9-2355-106-23P
WP 0786
WP 0782

Equipment Condition
Parking brake set (TM 9-2355-106-10)
Transmission set in NEUTRAL (N) (TM 9-2355-106-10)
Engine off (TM 9-2355-106-10)
MAIN POWER switch off (TM 9-2355-106-10)
Wheels chocked (TM 9-2355-106-10)
Belly armor removed (WP 0606)

WARNING

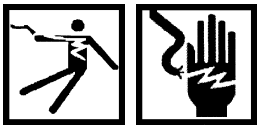

Use extreme caution when testing or working on or around electrical circuits. Always assume that electrical circuits are live. Electrical shock can occur upon contact with voltage high enough to cause current flow through muscles or nerves. On Direct Current (DC) systems, generally 1 milliamp of current can be felt, 5 milliamps can cause severe pain, 15 milliamps can cause loss of muscle control, and 70 milliamps can be fatal. Wear protective clothing; ensure skin, clothing, and surrounding areas are dry; do not wear jewelry; and touch only the insulated, nonmetallic parts of electrical components and testing equipment. To prevent electrical arcing, avoid shorting electrical test probes and jumper wires. Electrical arcing can cause bright flashes of light, capable of causing temporary blindness. If electrical injury occurs, immediately shut off power supply and seek medical assistance. Failure to comply may result in serious injury or death to personnel.

TRANSFER CASE VEHICLE SPEED SENSOR (VSS) REMOVAL AND INSTALLATION - (CONTINUED)

REMOVAL

1. Disconnect transfer case VSS harness connector (Figure 1, Item 5) from VSS (Figure 1, Item 3) located on top of transfer case (Figure 1, Item 4).

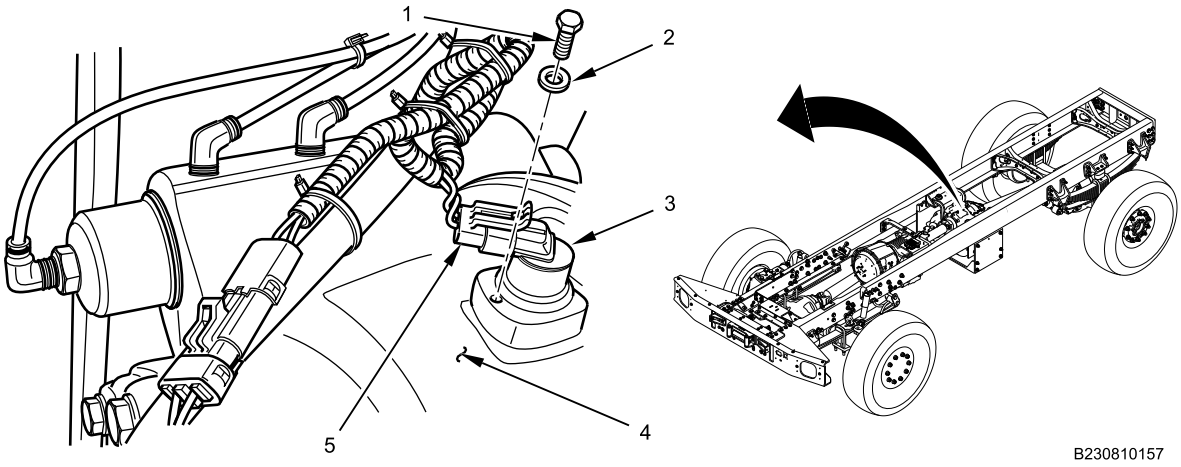

Figure 1. Transfer Case VSS Removal.

2. Remove retaining bolt (Figure 1, Item 1) and flat washer (Figure 1, Item 2) from transfer case (Figure 1, Item 4).
3. Remove transfer case VSS (Figure 1, Item 3) from transfer case (Figure 1, Item 4).

END OF TASK

TRANSFER CASE VEHICLE SPEED SENSOR (VSS) REMOVAL AND INSTALLATION - (CONTINUED)

INSTALLATION

1. Install transfer case VSS (Figure 2, Item 3) on transfer case (Figure 2, Item 4).

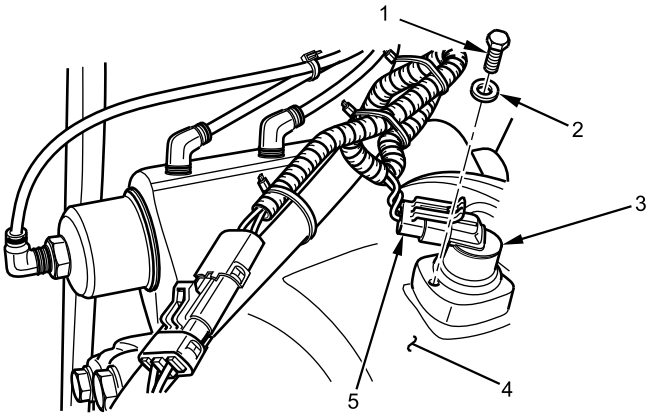

B230810158

Figure 2. Transfer Case VSS Installation.

WARNING

Dielectric grease is harmful to skin and eyes. If grease contacts eyes, rinse thoroughly and contact physician if irritation persists. If skin is contacted, wash thoroughly with soap and water. Failure to comply may result in serious injury to personnel.

2. Apply dielectric grease to electrical connections.
3. Install washer (Figure 2, Item 2) and bolt (Figure 2, Item 1) on transfer case (Figure 2, Item 4). Tighten bolt securely.
4. Connect transfer case VSS harness connector (Figure 2, Item 5) to transfer case VSS (Figure 2, Item 3).

END OF TASK

FOLLOW-ON MAINTENANCE

1. Turn MAIN POWER switch on (TM 9-2355-106-10).
2. Verify proper VSS operation (TM 9-2355-106-10).
3. Turn MAIN POWER switch off (TM 9-2355-106-10).
4. Install belly armor (WP 0606).
5. Remove wheel chocks (TM 9-2355-106-10).

END OF TASK

END OF WORK PACKAGE

FIELD MAINTENANCE

INJECTION PRESSURE REGULATOR (IPR) SENSOR REMOVAL AND INSTALLATION

INITIAL SETUP:

Tools and Special Tools
General Mechanic's Tool Kit (GMTK) (WP 0795, Item 37)
Drain pan (WP 0795, Item 75)
Wrench, torque, 20-100 lb-ft, 3/8-inch drive (WP 0795, Item 141)
Adapter, socket wrench, 3/8-inch drive female - 1/2-inch male (WP 0795, Item 2)
Socket, impact, deep, 1/2-inch drive, 6 pt, 1-1/8 inch (WP 0795, Item 105)

Materials/Parts
Grease (WP 0794, Item 22)
Sealing compound (WP 0794, Item 44)
Locknut (WP 0796, Item 81)
O-ring (WP 0796, Item 82)
O-ring (WP 0796, Item 83)
Backup ring (WP 0796, Item 84)

References
TM 9-2355-106-10
TM 9-2355-106-23P
WP 0782

Equipment Condition
Parking brake set (TM 9-2355-106-10)
Transmission set in NEUTRAL (N) (TM 9-2355-106-10)
Engine off (TM 9-2355-106-10)
MAIN POWER switch off (TM 9-2355-106-10)
Wheels chocked (TM 9-2355-106-10)
Engine hood open and secured (TM 9-2355-106-10)
Left engine armor plate removed (WP 0597)
Air cleaner assembly removed (WP 0257)
Charge Air Cooler (CAC) hose removed (WP 0264)
High pressure oil pump hose removed from high pressure pump (WP 0252)

WARNING

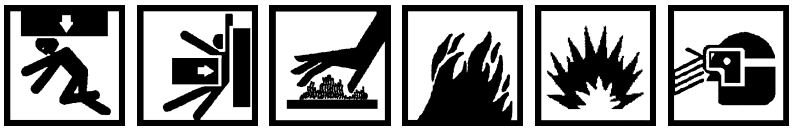

Engine hood is extremely heavy and requires two-person lift. Ensure that there is adequate space in front of the vehicle to open hood completely without pinning or pinching personnel between hood and any other structure. Use extreme care when working under hood and make sure it is properly supported. Failure to comply may result in serious injury or death to personnel.

Do not replace sensors while engine is hot. Removing sensors while engine is hot may damage internal threads on engine block and cause sensor to break or crack in engine block, engine block to crack, or hot coolant or oil to spill out. Allow engine to cool before performing maintenance. Failure to comply may result in damage to equipment and serious injury or death to personnel.

Fuel is flammable and can explode. Keep all open flames, flammable materials, ignition sources, and sparks away from diesel fuel and keep fire extinguisher nearby. Do not smoke when working with fuel. Do not work on fuel system when engine is hot. Fuel can be ignited by hot engine. Failure to comply may result in serious injury or death to personnel.

When bleeding fuel pressure from fuel filter header, wear safety goggles and cover priming valve with rag to keep fuel from spraying personnel. Failure to comply may result in serious injury to personnel.

INJECTION PRESSURE REGULATOR (IPR) SENSOR REMOVAL AND INSTALLATION - (CONTINUED)

REMOVAL

1. Position drain pan under engine block.

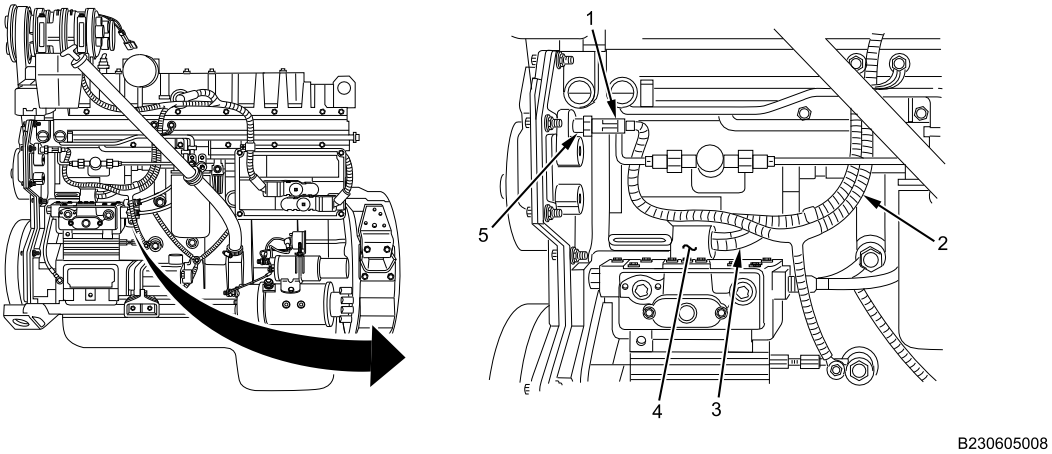

Figure 1. IPR Sensor and Electrical Connector.

2. Disconnect electrical connector (Figure 1, Item 3) from IPR sensor solenoid (Figure 1, Item 4).
3. Disconnect electrical connector (Figure 1, Item 1) from oil temperature sensor (Figure 1, Item 5) and position wire harness (Figure 1, Item 2) aside.
4. Remove locknut (Figure 2, Item 2), sleeve (Figure 2, Item 3), and solenoid (Figure 2, Item 4) from IPR sensor (Figure 2, Item 5). Discard locknut .

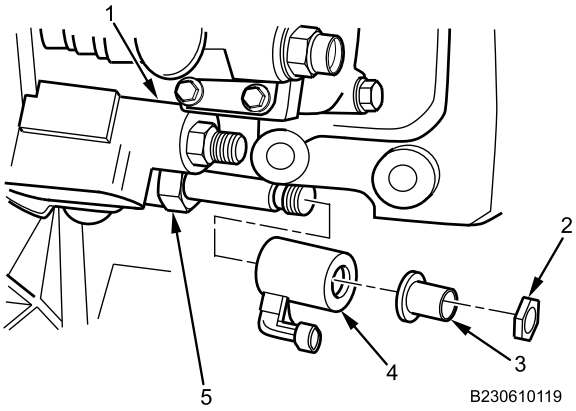

Figure 2. IPR Sensor.

5. Remove IPR sensor (Figure 2, Item 5) from high pressure pump (Figure 2, Item 1).
6. Remove and discard O-ring (Figure 3, Item 4) from IPR sensor (Figure 3, Item 3).

INJECTION PRESSURE REGULATOR (IPR) SENSOR REMOVAL AND INSTALLATION - (CONTINUED)

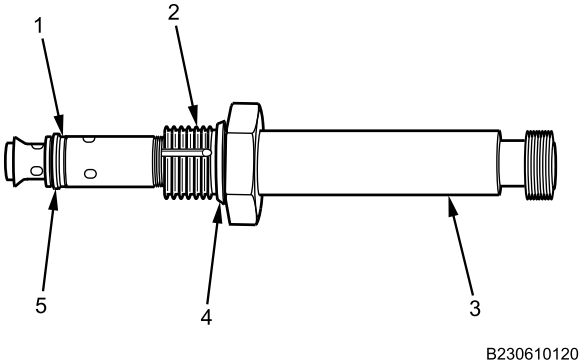

Figure 3. IPR Sensor and O-Rings.

7. Remove and discard O-ring (Figure 3, Item 5) and backup O-ring (Figure 3, Item 1) from IPR sensor (Figure 3, Item 3).
8. Remove old thread sealing compound from IPR threads (Figure 3, Item 2).

END OF TASK

INJECTION PRESSURE REGULATOR (IPR) SENSOR REMOVAL AND INSTALLATION - (CONTINUED)

INSTALLATION

1. Install new O-ring (Figure 4, Item 4) on IPR sensor (Figure 4, Item 3).

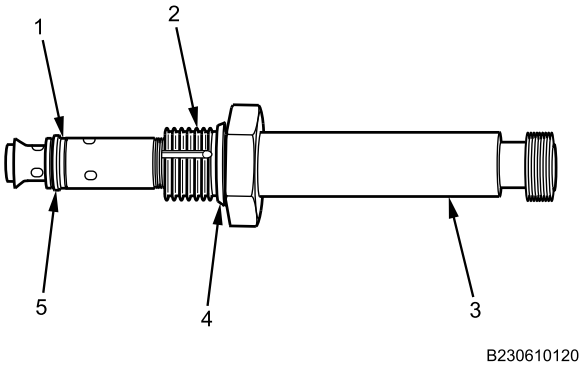

Figure 4. IPR Sensor and O-Rings.

2. Install new backup O-ring (Figure 4, Item 1) and O-ring (Figure 4, Item 5) on IPR sensor (Figure 4, Item 3).

WARNING

Thread sealing compound is harmful to skin and eyes. If thread sealing compound contacts eyes, rinse thoroughly and contact physician if irritation persists. If skin is contacted, wash thoroughly with soap and water. Failure to comply may result in serious injury to personnel.

NOTE

Do not allow thread sealing compound to contact O-rings.

3. Apply thread sealing compound on IPR sensor threads (Figure 4, Item 2).
4. Install IPR sensor (Figure 5, Item 5) in high pressure pump (Figure 5, Item 1). Torque sensor to 35 lb-ft (47 N•m).

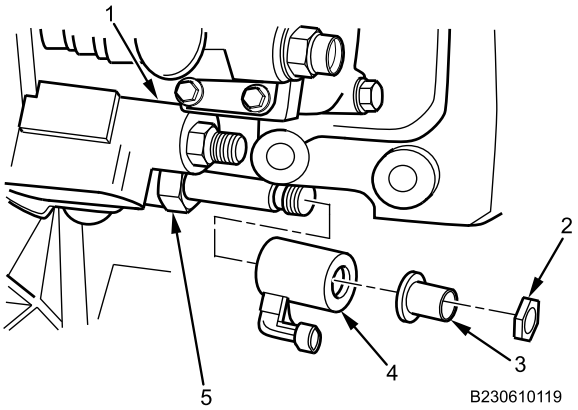

Figure 5. ICP Sensor.

INJECTION PRESSURE REGULATOR (IPR) SENSOR REMOVAL AND INSTALLATION - (CONTINUED)

5. Install solenoid (Figure 5, Item 4), sleeve (Figure 5, Item 3), and new locknut (Figure 5, Item 2) on IPR sensor (Figure 5, Item 5). Torque nut to 60 lb-in. (6.8 N•m).
6. Position wire harness (Figure 6, Item 2) in original position.

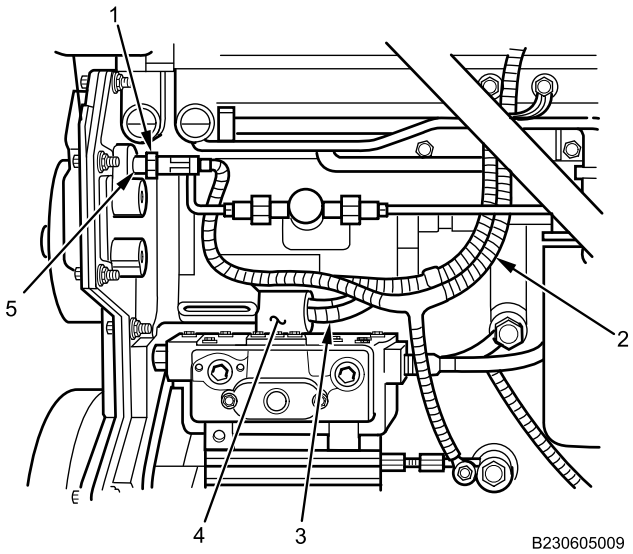

Figure 6. IPR Sensor and Electrical Connector.

WARNING

Dielectric grease is harmful to skin and eyes. If grease contacts eyes, rinse thoroughly and contact physician if irritation persists. If skin is contacted, wash thoroughly with soap and water. Failure to comply may result in serious injury to personnel.

7. Apply dielectric grease in electrical connector (Figure 6, Item 3) and connect on IPR sensor solenoid (Figure 6, Item 4).
8. Apply dielectric grease in electrical connector (Figure 6, Item 1) and connect on oil temperature sensor (Figure 6, Item 5).
9. Remove drain pan.

END OF TASK

FOLLOW-ON MAINTENANCE

1. Install high pressure oil pump hose on high pressure pump (WP 0252).
2. Install CAC hose (WP 0264).
3. Install air cleaner assembly (WP 0257).
4. Turn MAIN POWER switch on (TM 9-2355-106-10).
5. Start engine; run to operating temperature (TM 9-2355-106-10).
6. Checks for leaks (TM 9-2355-106-10).

INJECTION PRESSURE REGULATOR (IPR) SENSOR REMOVAL AND INSTALLATION - (CONTINUED)

7. Check instrument panel cluster to ensure no engine lights are illuminated (TM 9-2355-106-10).
8. Turn engine off (TM 9-2355-106-10).
9. Turn MAIN POWER switch off (TM 9-2355-106-10).
10. Check engine oil level and fill as needed (TM 9-2355-106-10).
11. Install left engine armor plate (WP 0597).
12. Close engine hood (TM 9-2355-106-10).
13. Remove wheel chocks (TM 9-2355-106-10).

END OF TASK

END OF WORK PACKAGE

FIELD MAINTENANCE

ACCELERATOR PEDAL SENSOR (APS) REMOVAL AND INSTALLATION

INITIAL SETUP:

Tools and Special Tools
General Mechanic's Tool Kit (GMTK) (WP 0795, Item 37)

Materials/Parts
Compound (WP 0794, Item 13)
Grease (WP 0794, Item 22)
Gloves (WP 0794, Item 18)
Face shield, industrial (WP 0794, Item 16)
Goggles, industrial (WP 0794, Item 20)

References
TM 9-2355-106-10
TM 9-2355-106-23P
WP 0786
WP 0782

Equipment Condition
Parking brake set (TM 9-2355-106-10)
Transmission set in NEUTRAL (N) (TM 9-2355-106-10)
Engine off (TM 9-2355-106-10)
MAIN POWER switch off (TM 9-2355-106-10)
Wheels chocked (TM 9-2355-106-10)
Cabin door secured safely open (WP 0608)

WARNING

Use extreme caution when testing or working on or around electrical circuits. Always assume that electrical circuits are live. Electrical shock can occur upon contact with voltage high enough to cause current flow through muscles or nerves. On Direct Current (DC) systems, generally 1 milliamp of current can be felt, 5 milliamps can cause severe pain, 15 milliamps can cause loss of muscle control, and 70 milliamps can be fatal. Wear protective clothing; ensure skin, clothing, and surrounding areas are dry; do not wear jewelry; and touch only the insulated, nonmetallic parts of electrical components and testing equipment. To prevent electrical arcing, avoid shorting electrical test probes and jumper wires. Electrical arcing can cause bright flashes of light, capable of causing temporary blindness. If electrical injury occurs, immediately shut off power supply and seek medical assistance. Failure to comply may result in serious injury or death to personnel.

Cabin door must be secured in the open position by using heavy duty straps to prevent accidental closure during vehicle maintenance. Pull check link retaining pin prior to securing door open. Failure to comply may result in serious injury or death to personnel.

ACCELERATOR PEDAL SENSOR (APS) REMOVAL AND INSTALLATION - (CONTINUED)

REMOVAL

1. Disconnect electrical connector (Figure 1, Item 4) from APS (Figure 1, Item 3).

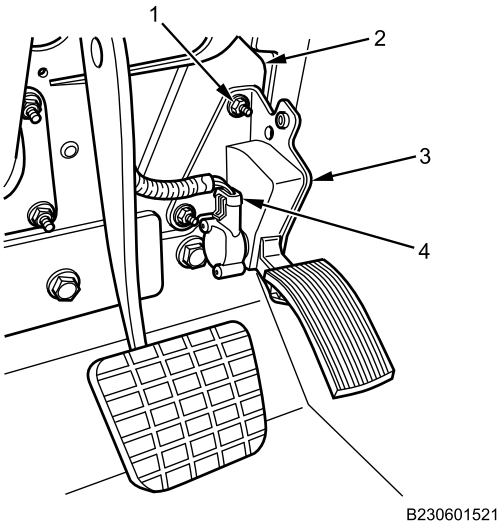

Figure 1. APS.

2. Remove two nuts (Figure 1, Item 1) and APS (Figure 1, Item 3) from bracket (Figure 1, Item 2).

END OF TASK

INSTALLATION

WARNING

Corrosion preventive compound is toxic. Use only in well-ventilated area. Do not get in eyes; wear chemical safety goggles and full-face shield when using. Avoid contact with skin and wear rubber or plastic, solvent-resistant gloves. In case of contact, remove contaminated clothing and immediately wash area with soap and water. If compound contacts eyes, flush eyes with large amounts of water for at least 15 minutes and get immediate medical attention. If swallowed, do not induce vomiting; contact a physician immediately. Failure to comply may result in serious injury or death to personnel.

Dielectric grease is harmful to skin and eyes. If grease contacts eyes, rinse thoroughly and contact physician if irritation persists. If skin is contacted, wash thoroughly with soap and water. Failure to comply may result in serious injury to personnel.

NOTE

Apply corrosion preventive compound to all nuts, screws, and bolts before installation.

Apply dielectric grease to all electrical connectors before installation.

1. Install APS (Figure 2, Item 3) on bracket (Figure 2, Item 2) with two nuts (Figure 2, Item 1). Tighten and secure.

ACCELERATOR PEDAL SENSOR (APS) REMOVAL AND INSTALLATION - (CONTINUED)

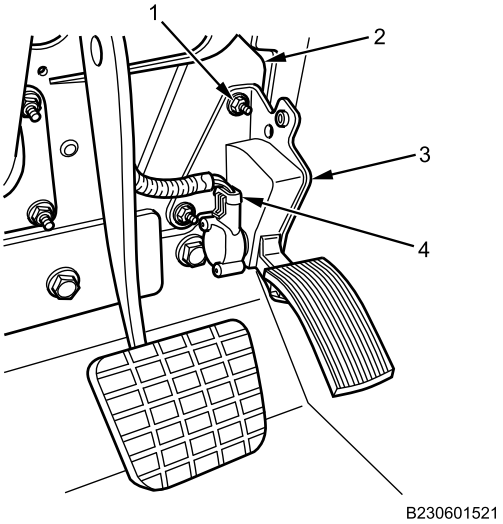

Figure 2. APS.

2. Connect electrical connector (Figure 2, Item 4) on APS (Figure 2, Item 3).

END OF TASK

FOLLOW-ON MAINTENANCE

1. Turn MAIN POWER switch on (TM 9-2355-106-10).
2. Start engine; run to operating temperature (TM 9-2355-106-10).
3. Check dash to make sure no engine lights are illuminated (TM 9-2355-106-10).
4. Verify accelerator pedal operation (TM 9-2355-106-10).
5. Turn engine off (TM 9-2355-106-10).
6. Turn MAIN POWER switch off (TM 9-2355-106-10).
7. Close cabin door (WP 0608).
8. Remove wheel chocks (TM 9-2355-106-10).

END OF TASK

END OF WORK PACKAGE

FIELD MAINTENANCE

BAROMETRIC PRESSURE SENSOR REMOVAL AND INSTALLATION

INITIAL SETUP:

Tools and Special Tools
General Mechanic's Tool Kit (GMTK) (WP 0795, Item 37)

Materials/Parts
Grease (WP 0794, Item 22)

References
TM 9-2355-106-10
TM 9-2355-106-23P
WP 0782

Equipment Condition
Parking brake set (TM 9-2355-106-10)
Transmission set in NEUTRAL (N) (TM 9-2355-106-10)
Engine off (TM 9-2355-106-10)
MAIN POWER switch off (TM 9-2355-106-10)
Wheels chocked (TM 9-2355-106-10)
Left door open and secured (WP 0608)
Instrument panel cluster removed (WP 0297)

WARNING

Cabin door must be secured in the open position by using heavy duty winch straps to prevent accidental closure during vehicle maintenance. Pull check link retaining pin prior to securing door open. Failure to comply may result in serious injury or death to personnel.

NOTE

The barometric pressure sensor is located behind the instrument panel cluster on the left side.

REMOVAL

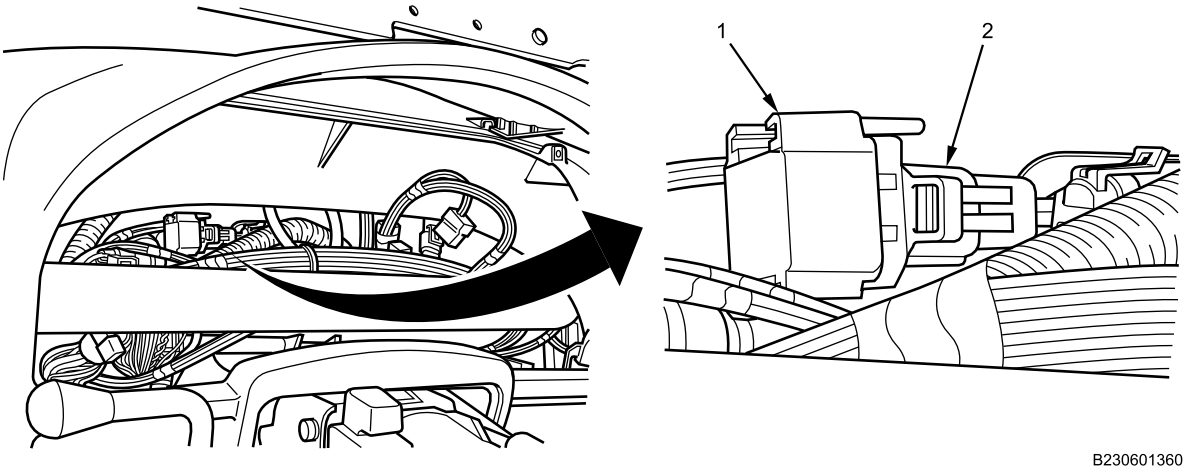

Figure 1. Barometric Pressure Sensor.

1. Disconnect electrical connector (Figure 1, Item 2) from barometric pressure sensor (Figure 1, Item 1) and remove barometric pressure sensor.

END OF TASK

BAROMETRIC PRESSURE SENSOR REMOVAL AND INSTALLATION - (CONTINUED)

INSTALLATION

WARNING

Dielectric grease is harmful to skin and eyes. If grease contacts eyes, rinse thoroughly and contact physician if irritation persists. If skin is contacted, wash thoroughly with soap and water. Failure to comply may result in serious injury to personnel.

1. Apply dielectric grease in electrical connector (Figure 2, Item 2) and connect onto barometric pressure sensor (Figure 2, Item 1).

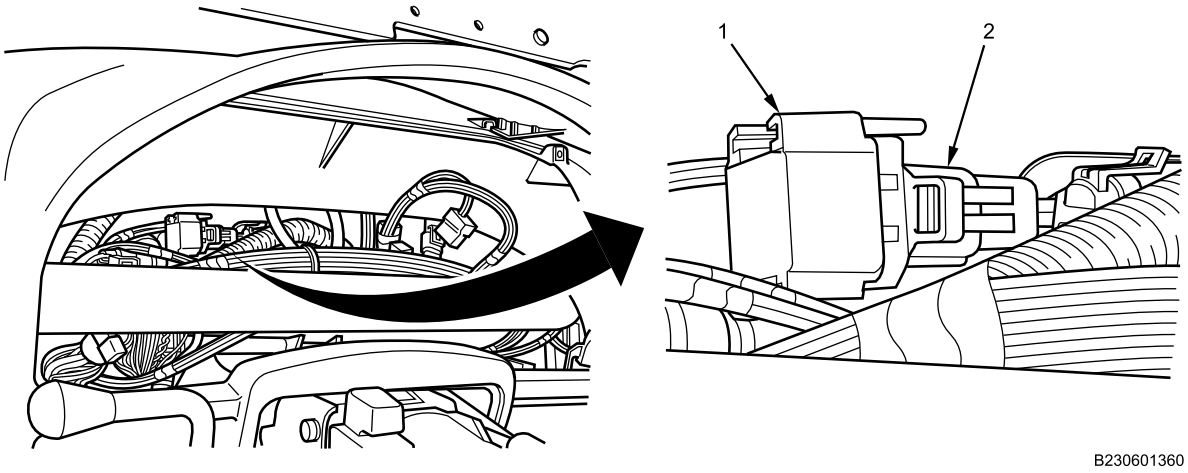

Figure 2. Barometric Pressure Sensor.

END OF TASK

FOLLOW-ON MAINTENANCE

1. Install instrument panel cluster (WP 0297).
2. Turn MAIN POWER switch on (TM 9-2355-106-10).
3. Start engine; run to operating temperature (TM 9-2355-106-10).
4. Check dash to make sure no engine lights are illuminated (TM 9-2355-106-10).
5. Turn engine off (TM 9-2355-106-10).
6. Turn MAIN POWER switch off (TM 9-2355-106-10).
7. Close left door (WP 0608).
8. Remove wheel chocks (TM 9-2355-106-10).

END OF TASK

END OF WORK PACKAGE

FIELD MAINTENANCE

INTAKE AIR TEMPERATURE (IAT) SENSOR REMOVAL AND INSTALLATION

INITIAL SETUP:

Tools and Special Tools
General Mechanic's Tool Kit (GMTK) (WP 0795, Item 37)

Materials/Parts
Compound (WP 0794, Item 13)
Grease (WP 0794, Item 22)
Gloves (WP 0794, Item 18)
Goggles, industrial (WP 0794, Item 20)
Faceshield, industrial (WP 0794, Item 16)

References
TM 9-2355-106-10
TM 9-2355-106-23P
WP 0786
WP 0782

Equipment Condition
Parking brake set (TM 9-2355-106-10)
Transmission set in NEUTRAL (N) (TM 9-2355-106-10)
Engine off (TM 9-2355-106-10)
MAIN POWER switch off (TM 9-2355-106-10)
Wheels chocked (TM 9-2355-106-10)
Engine hood open and secured (TM 9-2355-106-10)

WARNING

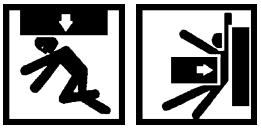

Engine hood is extremely heavy and requires two-person lift. Ensure that there is adequate space in front of the vehicle to open hood completely without pinning or pinching personnel between hood and any other structure. Use extreme care when working under hood and make sure it is properly supported. Failure to comply may result in serious injury or death to personnel.

REMOVAL

1. Disconnect electrical connector (Figure 1, Item 1) from IAT sensor (Figure 1, Item 2).

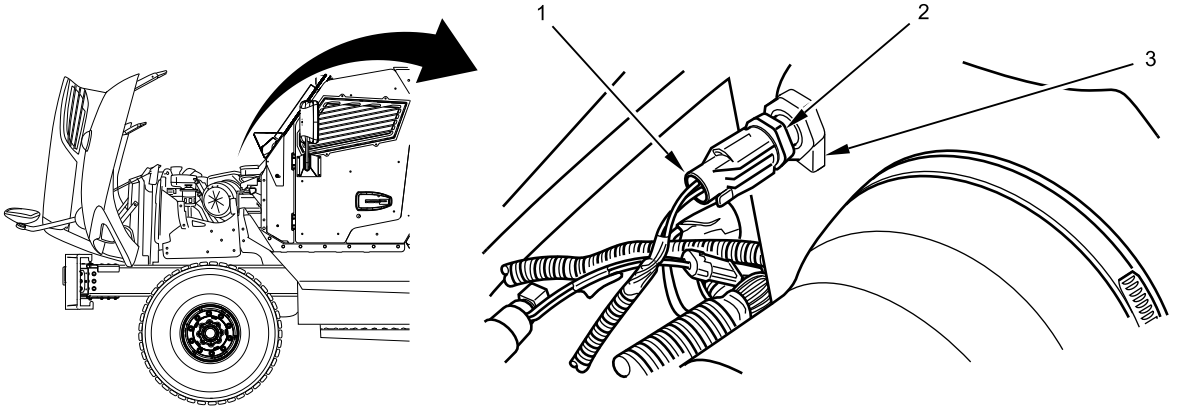

Figure 1. IAT Sensor.

2. Remove intake air temperature sensor (Figure 1, Item 2) from air cleaner assembly (Figure 1, Item 3).

END OF TASK

INTAKE AIR TEMPERATURE (IAT) SENSOR REMOVAL AND INSTALLATION - (CONTINUED)

INSTALLATION

WARNING

Corrosion preventive compound is toxic. Use only in well-ventilated area. Do not get in eyes; wear chemical safety goggles and full-face shield when using. Avoid contact with skin and wear rubber or plastic, solvent-resistant gloves. In case of contact, remove contaminated clothing and immediately wash area with soap and water. If compound contacts eyes, flush eyes with large amounts of water for at least 15 minutes and get immediate medical attention. If swallowed, do not induce vomiting; contact a physician immediately. Failure to comply may result in serious injury or death to personnel.

Dielectric grease is harmful to skin and eyes. If grease contacts eyes, rinse thoroughly and contact physician if irritation persists. If skin is contacted, wash thoroughly with soap and water. Failure to comply may result in serious injury to personnel.

1. Apply corrosion preventive compound on IAT sensor (Figure 2, Item 2) threads.

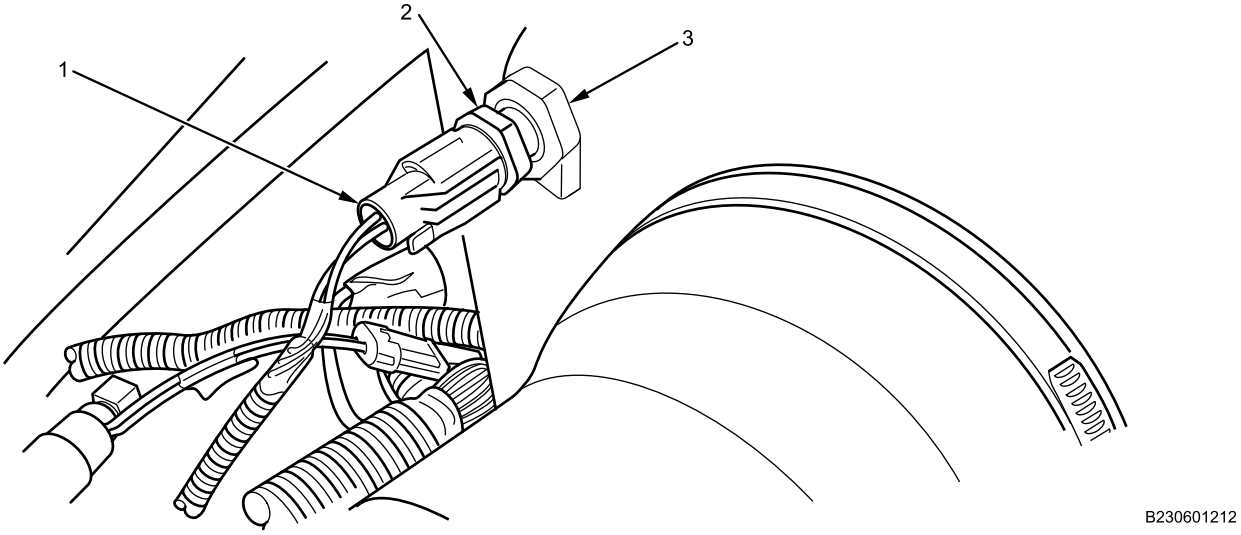

Figure 2. IAT Sensor.

2. Install IAT sensor (Figure 2, Item 2) into air cleaner assembly (Figure 2, Item 3). Tighten sensor securely.
3. Apply dielectric grease in electrical connector (Figure 2, Item 1) and connect onto IAT sensor (Figure 2, Item 2).

END OF TASK

INTAKE AIR TEMPERATURE (IAT) SENSOR REMOVAL AND INSTALLATION - (CONTINUED)

FOLLOW-ON MAINTENANCE

1. Turn MAIN POWER switch on (TM 9-2355-106-10).
2. Start engine; run to operating temperature (TM 9-2355-106-10).
3. Check instrument panel cluster to ensure no engine lights are illuminated (TM 9-2355-106-10).
4. Turn engine off (TM 9-2355-106-10).
5. Turn MAIN POWER switch off (TM 9-2355-106-10).
6. Close engine hood (TM 9-2355-106-10).
7. Remove wheel chocks (TM 9-2355-106-10).

END OF TASK

END OF WORK PACKAGE

FIELD MAINTENANCE

FUEL LEVEL SENDING UNIT REMOVAL AND INSTALLATION

INITIAL SETUP:

Tools and Special Tools
General Mechanic's Tool Kit (GMTK) (WP 0795, Item 37)

Materials/Parts
Sealant (WP 0794, Item 40)
Gloves (WP 0794, Item 18)
Goggles, industrial (WP 0794, Item 20)
Faceshield, industrial (WP 0794, Item 16)
Gasket (WP 0796, Item 141)

References
TM 9-2355-106-10
TM 9-2355-106-23P
WP 0786
WP 0782

Equipment Condition
Parking brake set (TM 9-2355-106-10)
Transmission set in NEUTRAL (N) (TM 9-2355-106-10)
Engine off (TM 9-2355-106-10)
MAIN POWER switch off (TM 9-2355-106-10)
Wheels chocked (TM 9-2355-106-10)
Belly armor removed (WP 0606)
Fuel tank removed (WP 0265)

FUEL LEVEL SENDING UNIT REMOVAL AND INSTALLATION - (CONTINUED)

WARNING

Use extreme caution when testing or working on or around electrical circuits. Always assume that electrical circuits are live. Electrical shock can occur upon contact with voltage high enough to cause current flow through muscles or nerves. On Direct Current (DC) systems, generally 1 milliamp of current can be felt, 5 milliamps can cause severe pain, 15 milliamps can cause loss of muscle control, and 70 milliamps can be fatal. Wear protective clothing; ensure skin, clothing, and surrounding areas are dry; do not wear jewelry; and touch only the insulated, nonmetallic parts of electrical components and testing equipment. To prevent electrical arcing, avoid shorting electrical test probes and jumper wires. Electrical arcing can cause bright flashes of light, capable of causing temporary blindness. If electrical injury occurs, immediately shut off power supply and seek medical assistance. Failure to comply may result in serious injury or death to personnel.

Fuel is flammable and can explode. Keep all open flames, flammable materials, ignition sources, and sparks away from diesel fuel and keep fire extinguisher nearby. Do not smoke when working with fuel. Do not work on fuel system when engine is hot. Fuel can be ignited by hot engine. Failure to comply may result in serious injury or death to personnel.

Be alert at all times for the smell of fuel. Hot engines and components can ignite fuel. If fuel smell is detected while operating vehicle, shut down vehicle immediately. Failure to comply may result in damage to equipment and serious injury or death to personnel.

Store diesel fuel in an approved container clearly marked DIESEL FUEL or JP-8, accordingly. Dispose of fuel in an approved container clearly marked DIESEL FUEL or JP-8, accordingly, in accordance with standard operating procedures.

Never use diesel fuel or JP-8 to clean parts. Fuel is highly flammable. Failure to comply may result in damage to equipment and serious injury or death to personnel.

Ensure radios are powered OFF before conducting fueling operations or maintenance activities. Failure to comply may result in injury to personnel.

Clean up all fuel spills. Spills can create slip and fire hazards. Dispose of materials in accordance with local hazardous waste disposal procedures. Failure to comply may result in injury to personnel and damage to the environment

FUEL LEVEL SENDING UNIT REMOVAL AND INSTALLATION - (CONTINUED)

REMOVAL

1. Remove five bolts (Figure 1, Item 2), fuel level sending unit (Figure 1, Item 1) and gasket from fuel tank (Figure 1, Item 3). Discard gasket.

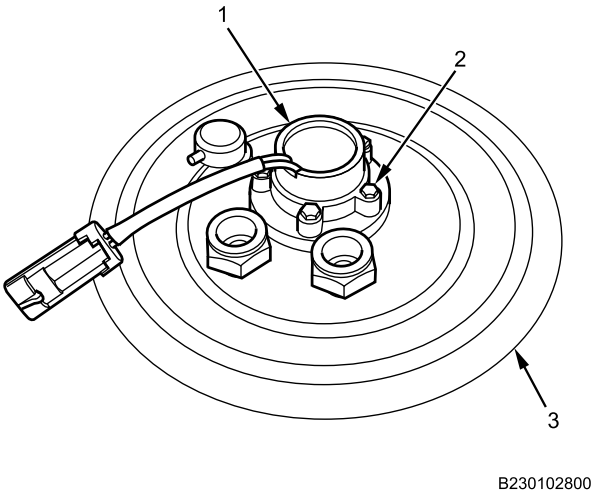

Figure 1. Fuel Level Sending Unit and Gasket Removal.

2. Using putty knife, clean gasket material from fuel level sending unit (Figure 1, Item 1) and fuel tank (Figure 1, Item 3).

END OF TASK

INSTALLATION

WARNING

Sealing compound is toxic. Use only in well-ventilated area. Do not get in eyes; wear chemical safety goggles and full-face shield when using. Avoid contact with skin and wear rubber or plastic, solvent-resistant gloves. In case of contact, remove contaminated clothing and immediately wash area with soap and water. If compound contacts eyes, flush eyes with large amounts of water for at least 15 minutes and get immediate medical attention. If swallowed, do not induce vomiting; contact a physician immediately. Failure to comply may result in serious injury or death to personnel.

FUEL LEVEL SENDING UNIT REMOVAL AND INSTALLATION - (CONTINUED)

1. Apply sealant on five bolts (Figure 2, Item 2).

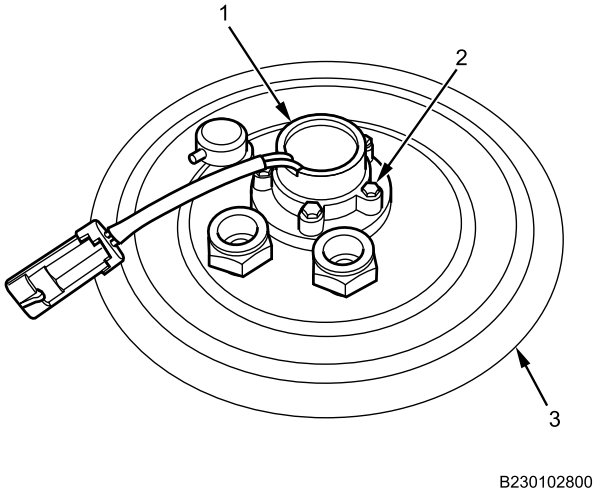

Figure 2. Fuel Level Sending Unit and Gasket Installation.

2. Install new gasket and fuel level sending unit (Figure 2, Item 1) on fuel tank (Figure 2, Item 3) with five bolts (Figure 2, Item 2). Tighten bolts securely.

END OF TASK

FOLLOW-ON MAINTENANCE

1. Install fuel tank (WP 0265).
2. Fill fuel tank (TM 9-2355-106-10).
3. Turn MAIN POWER switch on (TM 9-2355-106-10).
4. Prime fuel system (WP 0255).
5. Check for leaks (TM 9-2355-106-10).
6. Start engine; run to operating temperature (TM 9-2355-106-10).
7. Check fuel gauge and system operation (TM 9-2355-106-10).
8. Recheck for leaks (TM 9-2355-106-10).
9. Turn engine off (TM 9-2355-106-10).
10. Turn MAIN POWER switch off (TM 9-2355-106-10).
11. Install belly armor (WP 0606).
12. Remove wheel chocks (TM 9-2355-106-10).

END OF TASK

END OF WORK PACKAGE

FIELD MAINTENANCE

WATER SENSOR PROBE REMOVAL AND INSTALLATION

INITIAL SETUP:

Tools and Special Tools
General Mechanic's Tool Kit (GMTK) (WP 0795, Item 37)
Pan, drain, 5-gal. capacity (WP 0795, Item 75)

Materials/Parts
Grease (WP 0794, Item 22)
Lubricating oil (WP 0794, Item 22)
O-ring (WP 0796, Item 51)

References
TM 9-2355-106-10
TM 9-2355-106-23P
WP 0786
WP 0782

Equipment Condition
Parking brake set (TM 9-2355-106-10)
Transmission set in NEUTRAL (N) (TM 9-2355-106-10)
Engine off (TM 9-2355-106-10)
MAIN POWER switch off (TM 9-2355-106-10)
Wheels chocked (TM 9-2355-106-10)

WARNING

Fuel is flammable and can explode. Keep all open flames, flammable materials, ignition sources, and sparks away from diesel fuel and keep fire extinguisher nearby. Do not smoke when working with fuel. Do not work on fuel system when engine is hot. Fuel can be ignited by hot engine. Failure to comply may result in serious injury or death to personnel.

Be alert at all times for the smell of fuel. Hot engines and components can ignite fuel. If fuel smell is detected while operating vehicle, shut down vehicle immediately. Failure to comply may result in damage to equipment and serious injury or death to personnel.

Store diesel fuel in an approved container clearly marked DIESEL FUEL or JP-8, accordingly. Dispose of fuel in an approved container clearly marked DIESEL FUEL or JP-8, accordingly, in accordance with standard operating procedures

Never use diesel fuel or JP-8 to clean parts. Fuel is highly flammable. Failure to comply may result in damage to equipment and serious injury or death to personnel..

WATER SENSOR PROBE REMOVAL AND INSTALLATION - (CONTINUED)

REMOVAL

1. Position drain pan under fuel/water separator (Figure 1, Item 1).

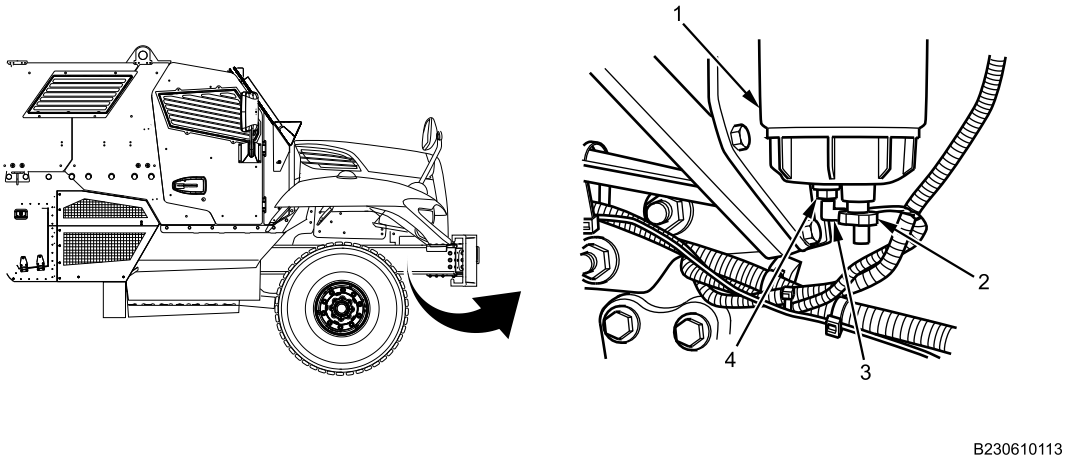

Figure 1. Fuel/Water Separator and Water Sensor Probe.

2. Open valve (Figure 1, Item 2) and drain fuel from fuel/water separator (Figure 1, Item 1).
3. Disconnect electrical connector (Figure 1, Item 3) from water sensor probe (Figure 1, Item 4).
4. Remove water sensor probe (Figure 1, Item 4) from fuel/water separator (Figure 1, Item 1).
5. Remove and discard O-ring (Figure 2, Item 1) from water sensor probe (Figure 2, Item 2).

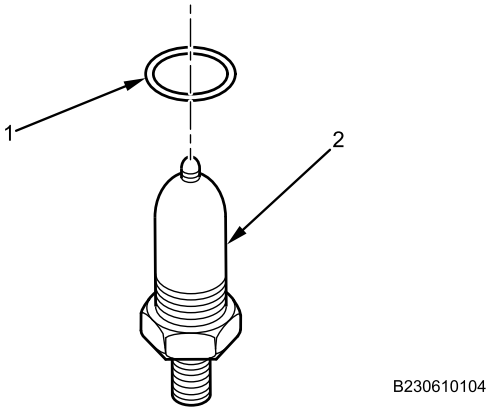

Figure 2. O-Ring Removal.

END OF TASK

WATER SENSOR PROBE REMOVAL AND INSTALLATION - (CONTINUED)

INSTALLATION

1. Lubricate new O-ring (Figure 3, Item 1) with clean engine oil.

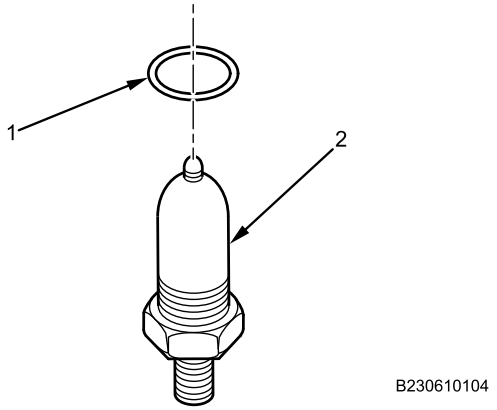

Figure 3. O-Ring Installation.

2. Install O-ring (Figure 3, Item 1) on water sensor probe (Figure 3, Item 2).
3. Close valve (Figure 4, Item 2) on fuel/water separator (Figure 4, Item 1).

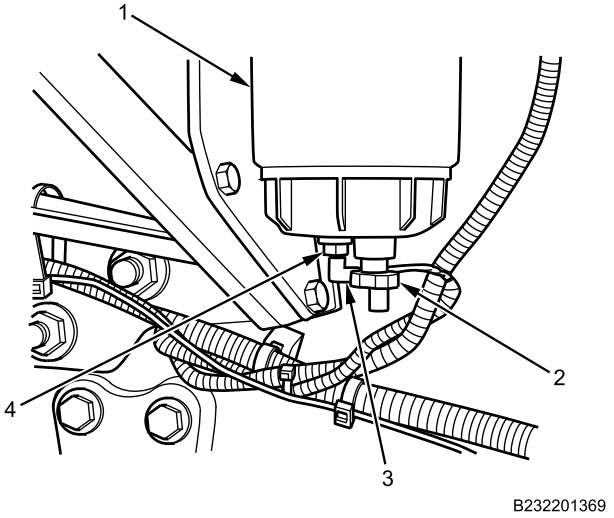

Figure 4. Fuel/Water Separator and Water Sensor Probe.

4. Install water sensor probe (Figure 4, Item 4) into fuel/water separator (Figure 4, Item 1). Tighten water sensor probe securely.

WATER SENSOR PROBE REMOVAL AND INSTALLATION - (CONTINUED)

WARNING

Dielectric grease is harmful to skin and eyes. If grease contacts eyes, rinse thoroughly and contact physician if irritation persists. If skin is contacted, wash thoroughly with soap and water. Failure to comply may result in serious injury to personnel.

5. Apply dielectric grease in electrical connector (Figure 4, Item 3) and connect on water sensor probe (Figure 4, Item 4).
6. Remove drain pan.

END OF TASK

FOLLOW-ON MAINTENANCE

1. Turn MAIN POWER switch on (TM 9-2355-106-10).
2. Start engine; run to operating temperature (TM 9-2355-106-10).
3. Check for leaks (TM 9-2355-106-10).
4. Check instrument panel cluster to ensure no engine lights are illuminated (TM 9-2355-106-10).
5. Turn engine off (TM 9-2355-106-10).
6. Turn MAIN POWER switch off (TM 9-2355-106-10).
7. Remove wheel chocks (TM 9-2355-106-10).

END OF TASK

END OF WORK PACKAGE

FIELD MAINTENANCE

ELECTRIC HORN REMOVAL AND INSTALLATION

INITIAL SETUP:

Tools and Special Tools
General Mechanic's Tool Kit (GMTK) (WP 0795, Item 37)

Materials/Parts
Grease (WP 0794, Item 22)
Lockwasher (WP 0796, Item 27)

References
TM 9-2355-106-10
TM 9-2355-106-23P
WP 0786
WP 0782

Equipment Condition
Parking brake set (TM 9-2355-106-10)
Transmission set in NEUTRAL (N) (TM 9-2355-106-10)
Engine off (TM 9-2355-106-10)
MAIN POWER switch off (TM 9-2355-106-10)
Wheels chocked (TM 9-2355-106-10)

WARNING

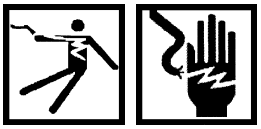

Use extreme caution when testing or working on or around electrical circuits. Always assume that electrical circuits are live. Electrical shock can occur upon contact with voltage high enough to cause current flow through muscles or nerves. On Direct Current (DC) systems, generally 1 milliamp of current can be felt, 5 milliamps can cause severe pain, 15 milliamps can cause loss of muscle control, and 70 milliamps can be fatal. Wear protective clothing; ensure skin, clothing, and surrounding areas are dry; do not wear jewelry; and touch only the insulated, nonmetallic parts of electrical components and testing equipment. To prevent electrical arcing, avoid shorting electrical test probes and jumper wires. Electrical arcing can cause bright flashes of light, capable of causing temporary blindness. If electrical injury occurs, immediately shut off power supply and seek medical assistance. Failure to comply may result in serious injury or death to personnel.

NOTE

This procedure applies to both the low-note horn (right side) and the high-note horn (left side).

ELECTRIC HORN REMOVAL AND INSTALLATION - (CONTINUED)

REMOVAL

NOTE

Bolt is removed from back side of radiator support crossmember.

1. Remove bolt (Figure 1, Item 2), lockwasher, and flat washer from horn (Figure 1, Item 1). Discard lockwasher.

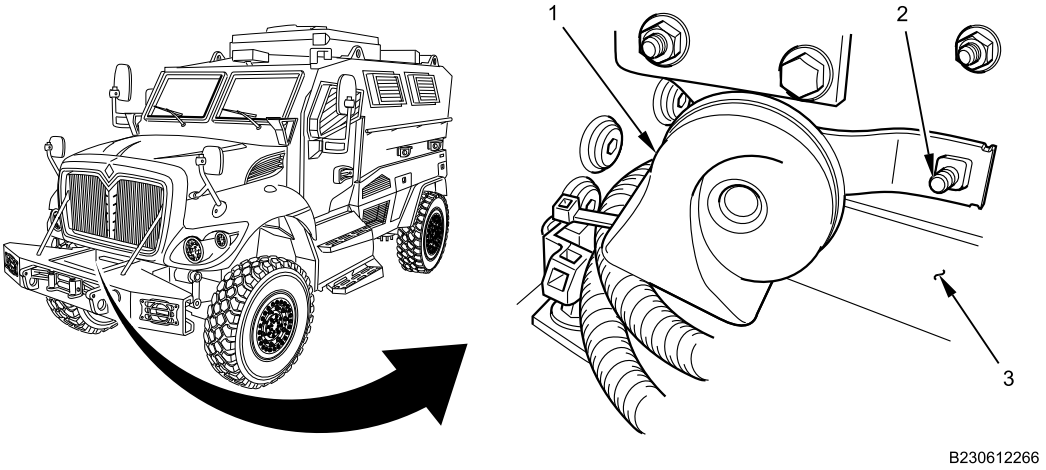

Figure 1. Horn Mounting.

2. Remove horn (Figure 1, Item 1) from radiator support crossmember (Figure 1, Item 3).
3. Disconnect electrical connector (Figure 2, Item 1) from horn (Figure 2, Item 2).

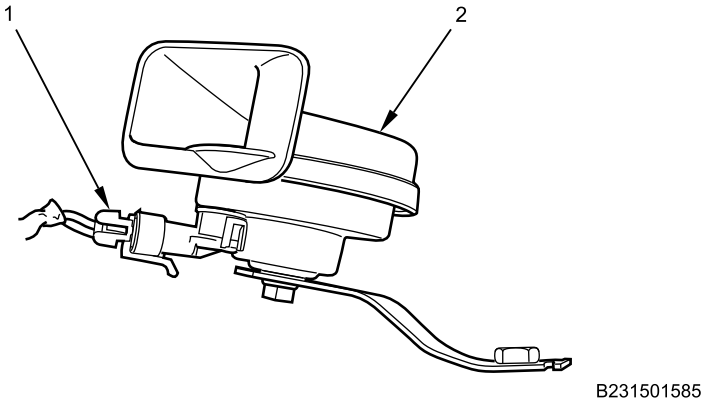

Figure 2. Horn Connector.

4. Remove horn (Figure 2, Item 2).

END OF TASK

ELECTRIC HORN REMOVAL AND INSTALLATION - (CONTINUED)

INSTALLATION

WARNING

Dielectric grease is harmful to skin and eyes. If grease contacts eyes, rinse thoroughly and contact physician if irritation persists. If skin is contacted, wash thoroughly with soap and water. Failure to comply may result in serious injury to personnel.

NOTE

Apply dielectric grease to all electrical connections.

1. Connect electrical connector (Figure 3, Item 1) on horn (Figure 3, Item 2).

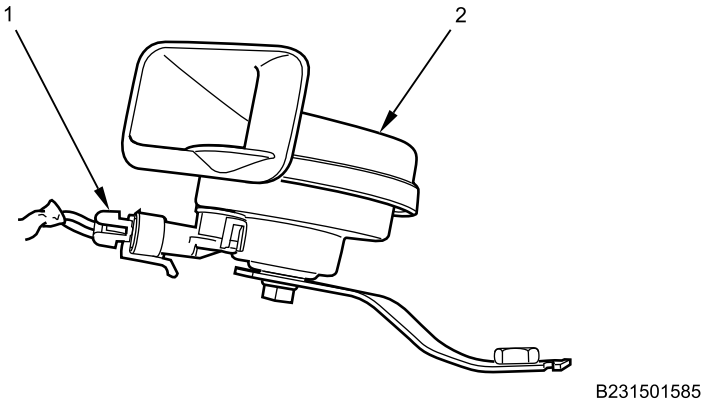

Figure 3. Horn Connector.

ELECTRIC HORN REMOVAL AND INSTALLATION - (CONTINUED)

NOTE

Bolt is installed from back side of radiator support crossmember.

2. Install horn (Figure 4, Item 1) on radiator crossmember support (Figure 4, Item 3) with bolt (Figure 4, Item 2), new lockwasher and flat washer. Tighten bolt securely.

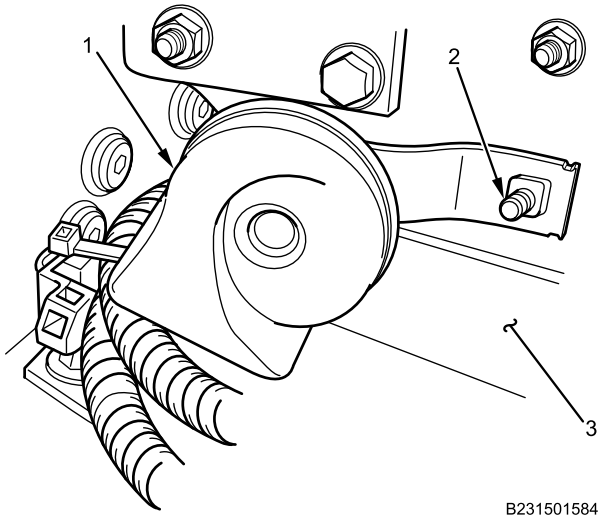

Figure 4. Horn Mounting.

END OF TASK

FOLLOW-ON MAINTENANCE

1. Turn MAIN POWER switch on (TM 9-2355-106-10).
2. Verify operation of horn (TM 9-2355-106-10).
3. Turn MAIN POWER switch off (TM 9-2355-106-10).
4. Remove wheel chocks (TM 9-2355-106-10).

END OF TASK

END OF WORK PACKAGE

FIELD MAINTENANCE

HORN BUTTON ASSEMBLY REMOVAL AND INSTALLATION

INITIAL SETUP:

Tools and Special Tools
General Mechanic's Tool Kit (GMTK) (WP 0795, Item 37)

Materials/Parts
Grease (WP 0794, Item 22)

References
TM 9-2355-106-10
TM 9-2355-106-23P
WP 0782

Equipment Condition
Parking brake set (TM 9-2355-106-10)
Transmission set in NEUTRAL (N) (TM 9-2355-106-10)
Engine off (TM 9-2355-106-10)
MAIN POWER switch off (TM 9-2355-106-10)
Wheels chocked (TM 9-2355-106-10)

WARNING

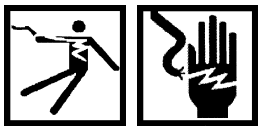

Use extreme caution when testing or working on or around electrical circuits. Always assume that electrical circuits are live. Electrical shock can occur upon contact with voltage high enough to cause current flow through muscles or nerves. On Direct Current (DC) systems, generally 1 milliamp of current can be felt, 5 milliamps can cause severe pain, 15 milliamps can cause loss of muscle control, and 70 milliamps can be fatal. Wear protective clothing; ensure skin, clothing, and surrounding areas are dry; do not wear jewelry; and touch only the insulated, nonmetallic parts of electrical components and testing equipment. To prevent electrical arcing, avoid shorting electrical test probes and jumper wires. Electrical arcing can cause bright flashes of light, capable of causing temporary blindness. If electrical injury occurs, immediately shut off power supply and seek medical assistance. Failure to comply may result in serious injury or death to personnel.

HORN BUTTON ASSEMBLY REMOVAL AND INSTALLATION - (CONTINUED)

REMOVAL

NOTE

The horn button assembly has four attachment points. All four attachment points will need releasing in order to remove the horn button. The release slots are on the steering wheel assembly, two each on the left and right sides.

1. Insert crosstip screwdriver into one of four release slots (Figure 1, Item 2) on steering wheel (Figure 1, Item 1).

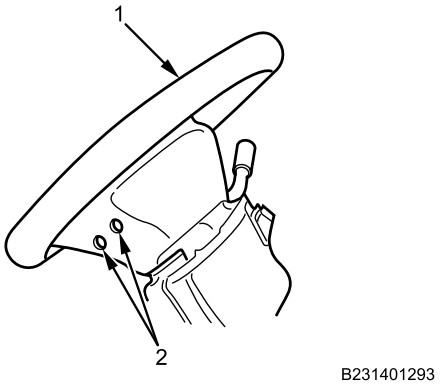

Figure 1. Steering Wheel Assembly and Tool.

2. Apply pressure to release spring (Figure 2, Item 1) retaining horn button while simultaneously applying outward pressure on horn button (Figure 2, Item 2).

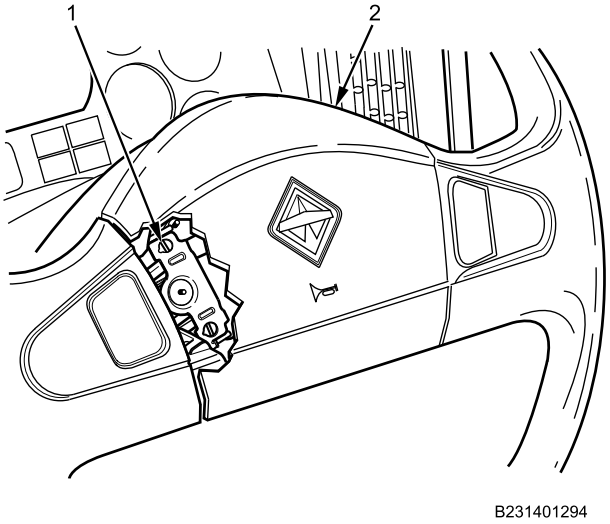

Figure 2. Horn Button Assembly and Spring.

3. Release remaining three horn button attachment points using crosstip screwdriver while applying outward pressure on horn button (Figure 2, Item 2).
4. Separate horn button (Figure 3, Item 1) from steering wheel (Figure 3, Item 2).

HORN BUTTON ASSEMBLY REMOVAL AND INSTALLATION - (CONTINUED)

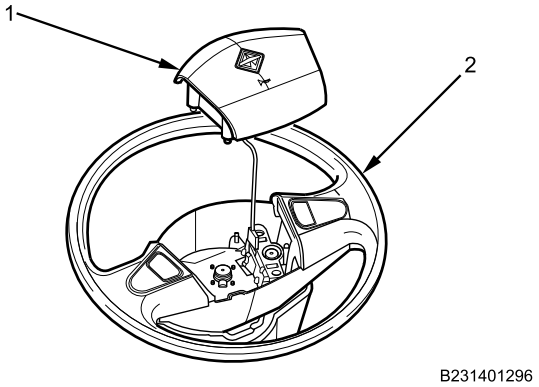

Figure 3. Horn Button Assembly and Wiring Harness.

5. Disconnect two electrical connectors (Figure 4, Item 2) from horn button (Figure 4, Item 1).

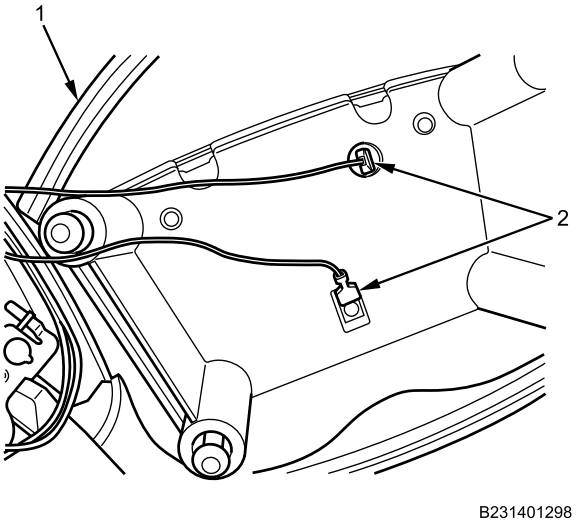

Figure 4. Horn Button Assembly and Electrical Connectors.

HORN BUTTON ASSEMBLY REMOVAL AND INSTALLATION - (CONTINUED)

6. Remove horn button assembly (Figure 5, Item 1) from steering wheel assembly (Figure 5, Item 2).

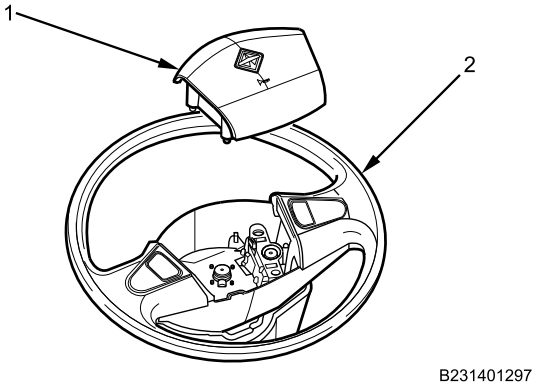

Figure 5. Horn Button Assembly Removed.

END OF TASK

INSTALLATION

WARNING

Dielectric grease is harmful to skin and eyes. If grease contacts eyes, rinse thoroughly and contact physician if irritation persists. If skin is contacted, wash thoroughly with soap and water. Failure to comply may result in serious injury to personnel.

NOTE

Apply dielectric grease to electrical connections.

1. Connect two electrical connectors (Figure 6, Item 2) from horn button (Figure 6, Item 1).

HORN BUTTON ASSEMBLY REMOVAL AND INSTALLATION - (CONTINUED)

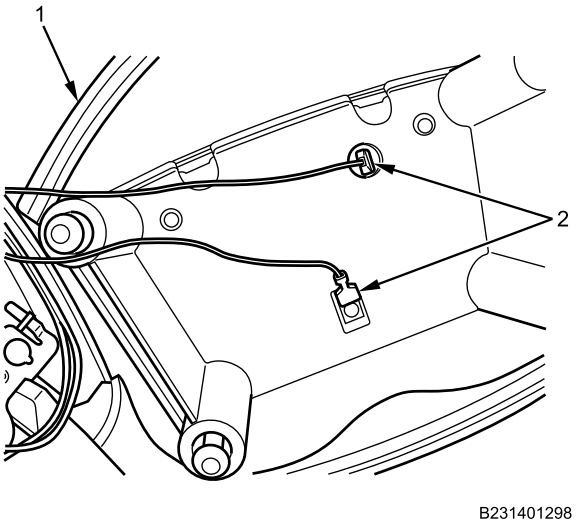

Figure 6. Horn Button Assembly and Electrical Connectors.

2. Ensure release springs (Figure 7, Item 1) are properly seated on steering wheel.

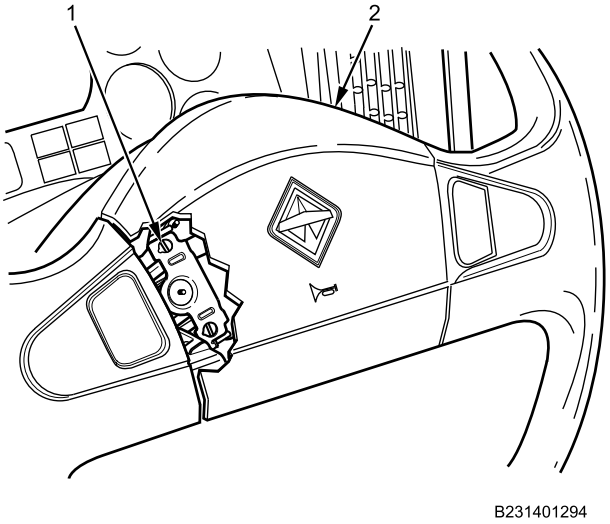

Figure 7. Position Horn Button Assembly.

3. Position horn button (Figure 7, Item 2) on steering wheel.

HORN BUTTON ASSEMBLY REMOVAL AND INSTALLATION - (CONTINUED)

4. Install horn button assembly (Figure 8, Item 1) on steering wheel assembly (Figure 8, Item 2) and snap in place.

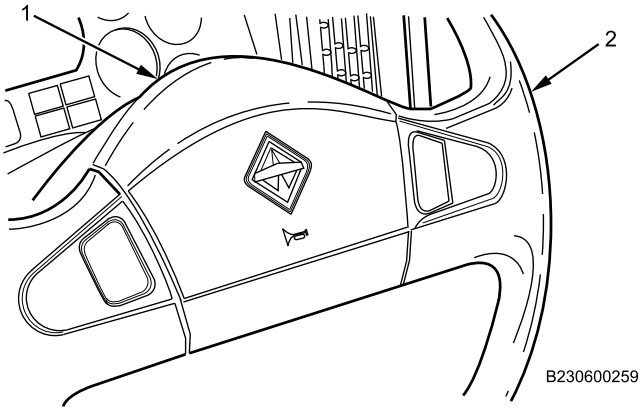

Figure 8. Horn Button and Steering Wheel.

END OF TASK

FOLLOW-ON MAINTENANCE

1. Turn MAIN POWER switch on (TM 9-2355-106-10).
2. Activate Master Vehicle Light Switch (MVLS) switch PARK mode (TM 9-2355-106-10).
3. Verify horn operation (TM 9-2355-106-10).
4. Turn MAIN POWER switch off (TM 9-2355-106-10).
5. Remove wheel chocks (TM 9-2355-106-10).

END OF TASK

END OF WORK PACKAGE

FIELD MAINTENANCE

BATTERY DISCONNECT PROCEDURE

INITIAL SETUP:

Tools and Special Tools
General Mechanic's Tool Kit (GMTK) (WP 0795, Item 37)
Gloves (WP 0795, Item 38)

Materials/Parts
Face shield, industrial (WP 0794, Item 16)
Goggles, industrial (WP 0794, Item 20)
Grease (WP 0794, Item 22)
Paint stick (WP 0794, Item 35)
Tape (WP 0794, Item 52)
Wire tags (WP 0794, Item 49)

References
TM 9-2355-106-10
TM 9-2355-106-23P
WP 0786
WP 0782

Equipment Condition
Parking brake set (TM 9-2355-106-10)
Transmission set in NEUTRAL (N) (TM 9-2355-106-10)
Engine off (TM 9-2355-106-10)
MAIN POWER switch off (TM 9-2355-106-10)
Wheels chocked (TM 9-2355-106-10)

WARNING

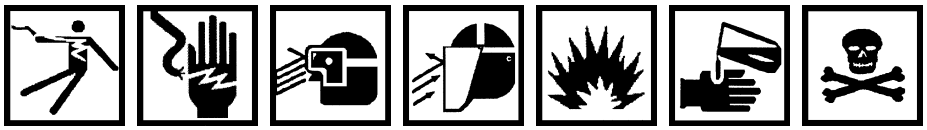

Use extreme caution when testing or working on or around electrical circuits. Always assume that electrical circuits are live. Electrical shock can occur upon contact with voltage high enough to cause current flow through muscles or nerves. On Direct Current (DC) systems, generally 1 milliamp of current can be felt, 5 milliamps can cause severe pain, 15 milliamps can cause loss of muscle control, and 70 milliamps can be fatal. Wear protective clothing; ensure skin, clothing, and surrounding areas are dry; do not wear jewelry; and touch only the insulated, nonmetallic parts of electrical components and testing equipment. To prevent electrical arcing, avoid shorting electrical test probes and jumper wires. Electrical arcing can cause bright flashes of light, capable of causing temporary blindness. If electrical injury occurs, immediately shut off power supply and seek medical assistance. Failure to comply may result in serious injury or death to personnel.

Wear protective eye goggles, face shield, and long sleeves when working on or near batteries. Batteries contain corrosive acid and can produce explosive gases. Batteries supply electrical current that can cause burns and electrical shock. Always check electrolyte level with engine off. Avoid leaning over or onto battery. Do not wear jewelry and do not smoke or have open flame or spark near battery. Do not allow tools to contact battery box or battery terminals. Failure to comply may result in damage to equipment and serious injury or death to personnel.

Cycle ignition switch once to remove any residual electrical charge. Failure to comply may result in serious injury or death to personnel.

BATTERY DISCONNECT PROCEDURE - (CONTINUED)

REMOVAL

1. Remove rear cab body bolt (Figure 1, Item 1) from cab.

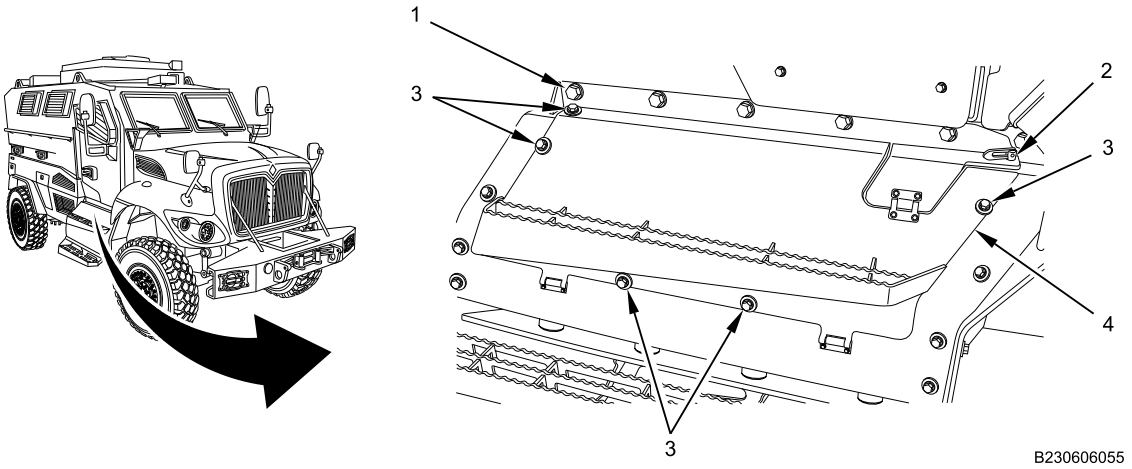

Figure 1. Battery Door.

2. Remove five bolts and flat washers (Figure 1, Item 3) from battery access door.
3. Move access door lever (Figure 1, Item 2) to up position.
4. Open battery access door (Figure 1, Item 4).
5. Using paint stick, begin at front battery and label batteries 1, 2, 3, and 4 (Figure 2, Item 1).

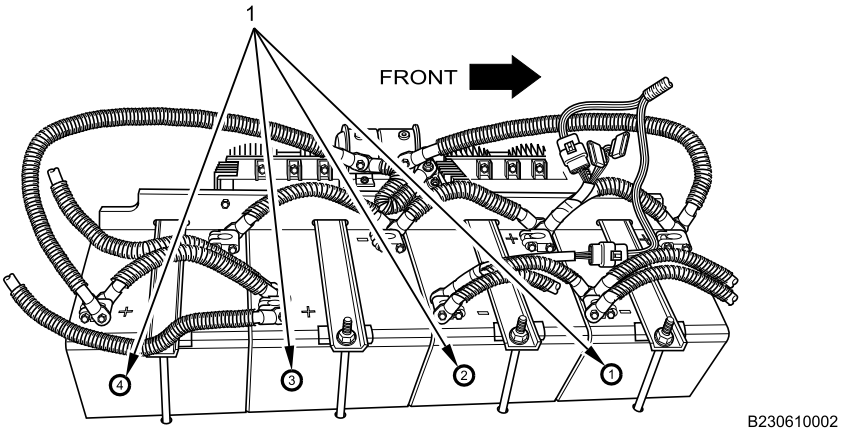

Figure 2. Battery Identification.

BATTERY DISCONNECT PROCEDURE - (CONTINUED)

NOTE

Using tags, label all cables and connectors before removal to ensure correct installation.

The clean-power and clean-ground connectors are direct positive and negative connections from the batteries to the Engine Control Module (ECM) and the Transmission Control Module (TCM). The clean-power battery cable harness incorporates two fuses, a 40-amp fuse for the ECM and a 10-amp fuse for the TCM.

6. Disconnect clean-power connector (Figure 3, Item 1) from chassis harness.

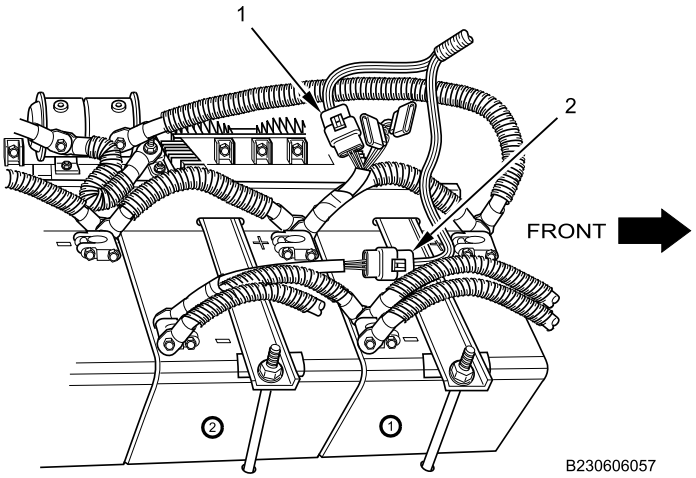

Figure 3. Clean-Power and Clean-Ground Connections.

7. Disconnect clean-ground connector (Figure 3, Item 2) from chassis harness.

BATTERY DISCONNECT PROCEDURE - (CONTINUED)

8. Remove nut (Figure 4, Item 5) from terminal bolt on negative stud adapter clamp (Figure 4, Item 6) of battery 1 (Figure 4, Item 4).

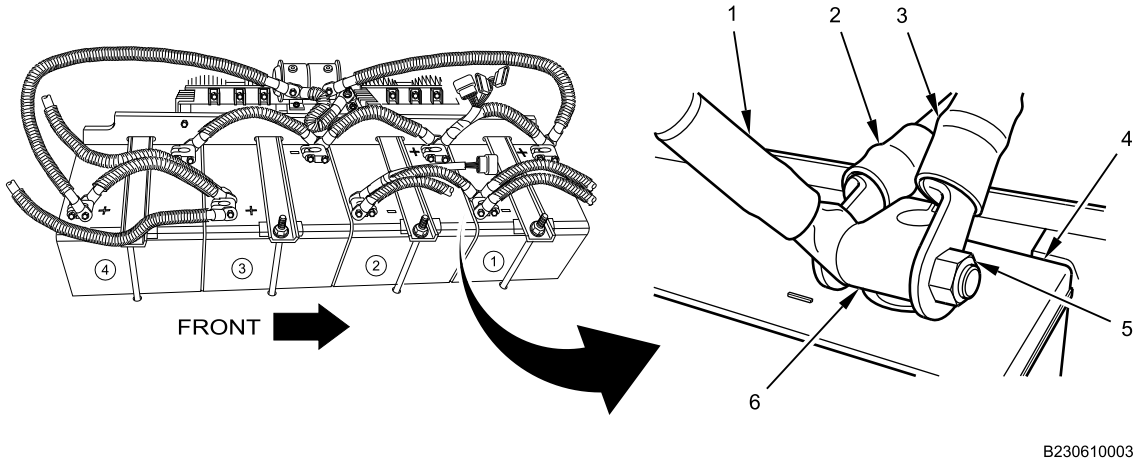

Figure 4. Battery 1 Ground Connections.

9. Remove starter motor ground cable terminal (Figure 4, Item 2) from terminal bolt on battery 1 negative stud adapter clamp (Figure 4, Item 6).
10. Wrap loose end of starter motor ground cable terminal (Figure 4, Item 2) with electrical tape to prevent energizing circuit.
11. Remove terminal bolt, body ground cable terminal (Figure 4, Item 3), and clean-ground cable terminal (Figure 4, Item 1) from battery 1 negative stud adapter clamp (Figure 4, Item 6).
12. Wrap loose end of body ground cable terminal (Figure 4, Item 3) with electrical tape to prevent energizing circuit.
13. Remove nut (Figure 5, Item 4) from terminal bolt on negative stud adapter clamp (Figure 5, Item 5) of battery 2 (Figure 5, Item 3).

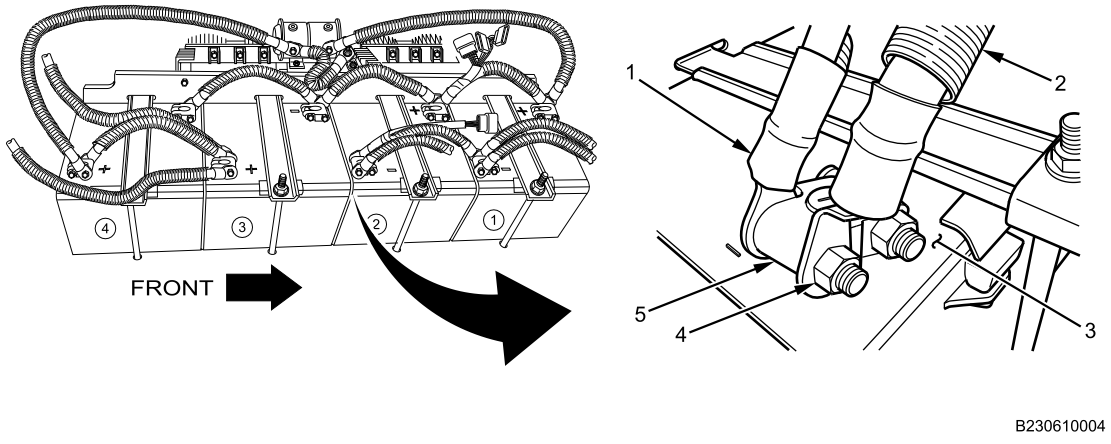

Figure 5. Battery 2 Ground Connections.

14. Remove NATO ground cable terminal (Figure 5, Item 2) from terminal bolt on battery 2 negative stud adapter clamp (Figure 5, Item 5).
15. Wrap loose end of NATO ground cable terminal (Figure 5, Item 2) with electrical tape to prevent energizing circuit.

BATTERY DISCONNECT PROCEDURE - (CONTINUED)

16. Remove terminal bolt and clean-ground cable (Figure 5, Item 1) from battery 2 negative stud adapter clamp (Figure 5, Item 5).
17. Remove battery 1-to-battery 2 clean-ground cable (Figure 5, Item 1) from vehicle.
18. Remove nut (Figure 6, Item 3) from terminal bolt on positive stud adapter clamp (Figure 6, Item 4) of battery 1 (Figure 6, Item 5).

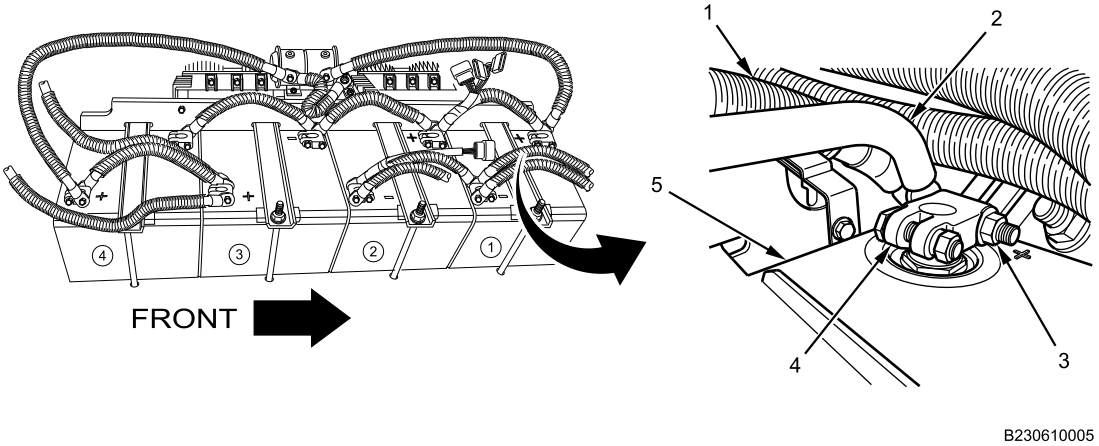

Figure 6. Battery 1 Positive Connections.

19. Remove terminal bolt, 12V battery disconnect solenoid switch terminal (Figure 6, Item 1), and clean-power cable terminal (Figure 6, Item 2) from battery 1 positive stud adapter clamp (Figure 6, Item 4).
20. Wrap loose ends of 12V battery disconnect solenoid switch terminal (Figure 6, Item 1) and clean-power cable terminal (Figure 6, Item 2) with electrical tape to prevent energizing circuits.

END OF TASK

BATTERY DISCONNECT PROCEDURE - (CONTINUED)

INSTALLATION

WARNING

Dielectric grease is harmful to skin and eyes. If grease contacts eyes, rinse thoroughly and contact physician if irritation persists. If skin is contacted, wash thoroughly with soap and water. Failure to comply may result in serious injury to personnel.

CAUTION

Pay close attention to cable and connector labels. Wire colors may not match. Incorrect installation may result in damage to electrical system.

NOTE

Remove electrical tape and ensure battery cable terminals are clean before applying dielectric grease to all electrical connections.

Apply dielectric grease to all cable terminals and harness connectors before installation.

1. Install clean-power cable terminal (Figure 7, Item 2), 12V battery disconnect solenoid switch terminal (Figure 7, Item 1), and terminal bolt on positive stud adapter clamp (Figure 7, Item 4) on battery 1 (Figure 7, Item 5).

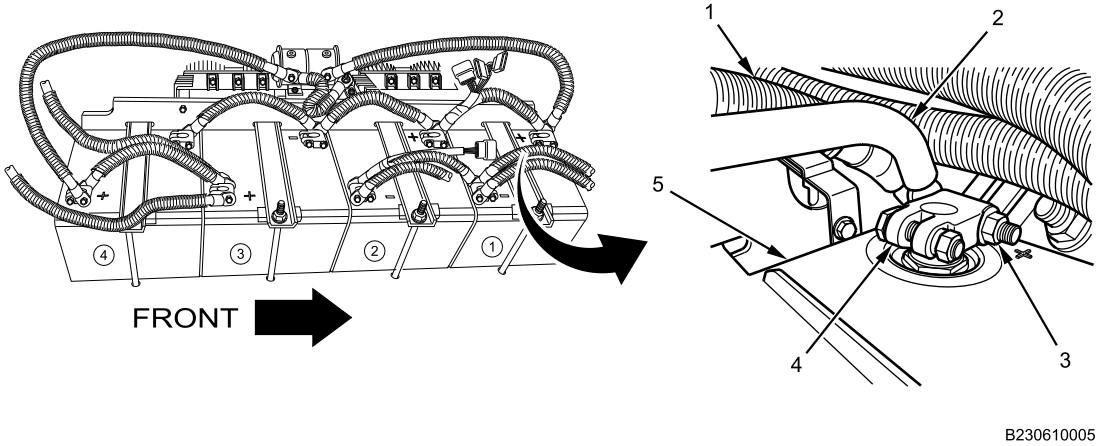

Figure 7. Battery 1 Positive Connections.

2. Install nut (Figure 7, Item 3) on terminal bolt on battery 1 positive stud adapter clamp (Figure 7, Item 4) and tighten securely.

BATTERY DISCONNECT PROCEDURE - (CONTINUED)

3. Install clean-ground cable (Figure 8, Item 1) and terminal bolt on negative stud adapter clamp (Figure 8, Item 5) on battery 2 (Figure 8, Item 3).

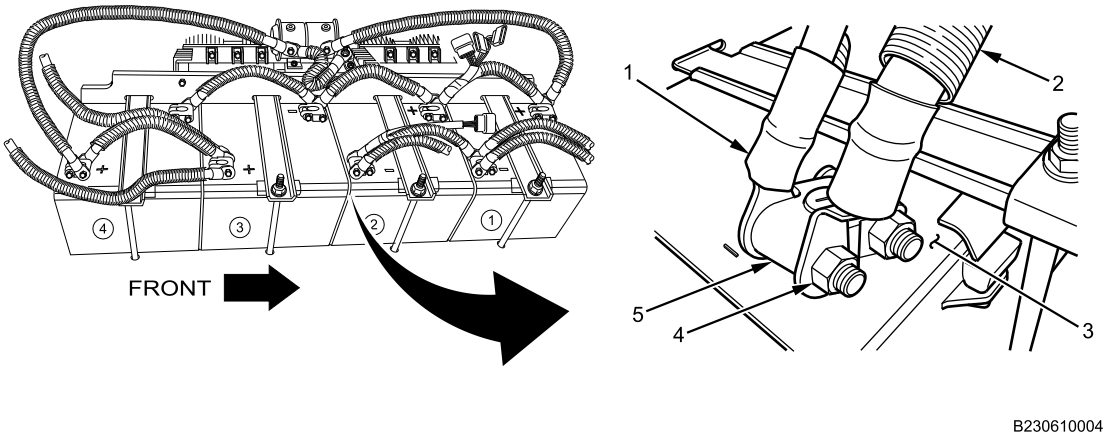

Figure 8. Battery 2 Ground Connections.

4. Install NATO ground cable terminal (Figure 8, Item 2) on terminal bolt on battery 2 negative stud adapter clamp (Figure 8, Item 5).
5. Install nut (Figure 8, Item 4) on terminal bolt on battery 2 negative stud adapter clamp (Figure 8, Item 5) and tighten securely.
6. Install clean-ground cable terminal (Figure 9, Item 1), starter motor ground cable terminal (Figure 9, Item 2), and terminal bolt on negative stud adapter clamp (Figure 9, Item 6) on battery 1 (Figure 9, Item 4).

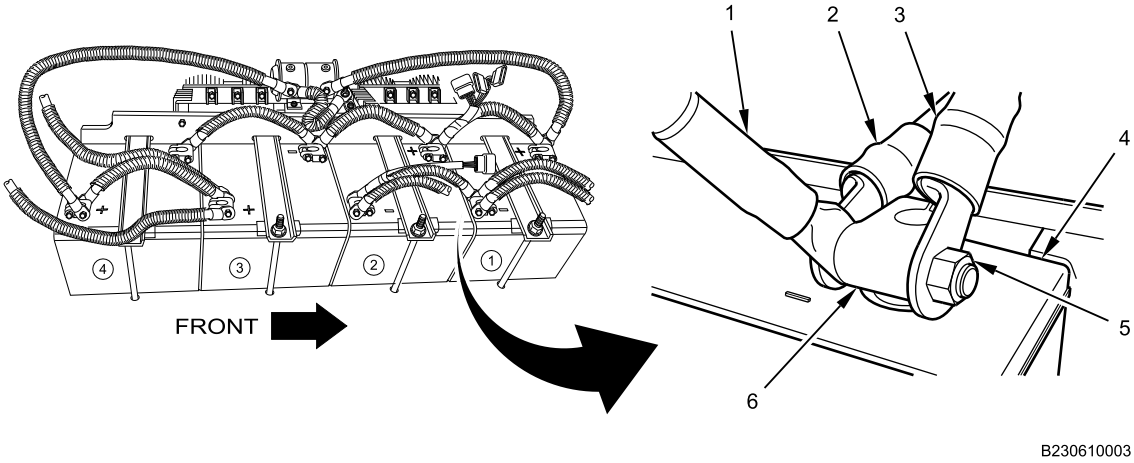

Figure 9. Battery 1 Ground Connections.

7. Install body ground cable terminal (Figure 9, Item 3) on terminal bolt on battery 1 negative stud adapter clamp (Figure 9, Item 6).
8. Install nut (Figure 9, Item 5) on terminal bolt on battery 1 negative stud adapter clamp (Figure 9, Item 6) and tighten securely.

BATTERY DISCONNECT PROCEDURE - (CONTINUED)

9. Connect clean-power connector (Figure 10, Item 1) to chassis harness.

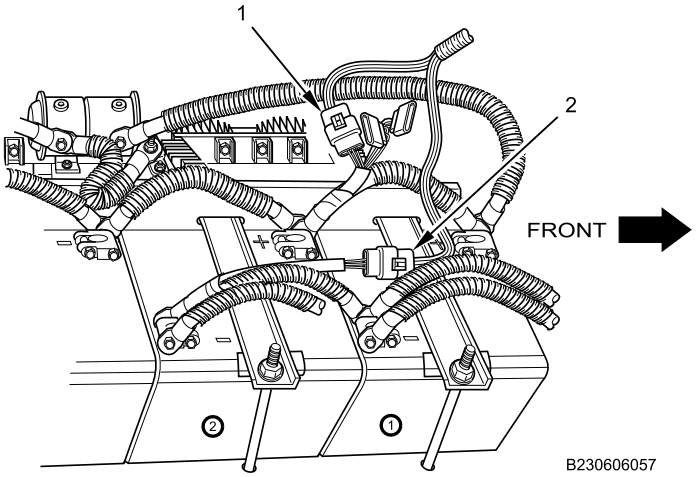

Figure 10. Clean-Power and Clean-Ground Connections.

10. Connect clean-ground connector (Figure 10, Item 2) to chassis harness.
11. Close battery access door (Figure 11, Item 4), and install five bolts and flat washers (Figure 11, Item 3) and tighten securely.

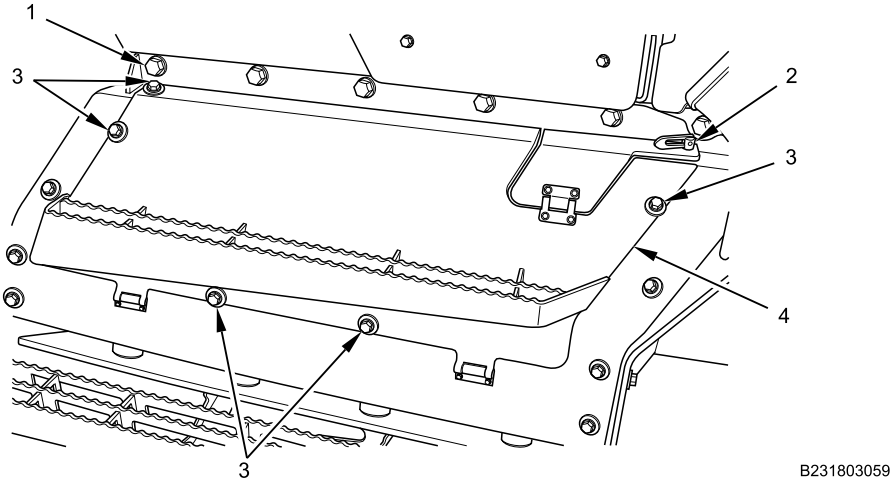

Figure 11. Battery Door.

12. Install rear cab body bolt (Figure 11, Item 1) and tighten securely.
13. Move access door lever (Figure 11, Item 2) to down position.

END OF TASK

BATTERY DISCONNECT PROCEDURE - (CONTINUED)

FOLLOW-ON MAINTENANCE

1. Turn MAIN POWER switch on (TM 9-2355-106-10).
2. Start engine (TM 9-2355-106-10).
3. Turn engine off (TM 9-2355-106-10).
4. Turn MAIN POWER switch off (TM 9-2355-106-10).
5. Remove wheel chocks (TM 9-2355-106-10).

END OF TASK

END OF WORK PACKAGE

FIELD MAINTENANCE

BATTERY CABLE AND CLEAN POWER HARNESS REMOVAL AND INSTALLATION

INITIAL SETUP:

Tools and Special Tools
General Mechanic's Tool Kit (GMTK) (WP 0795, Item 37)
Gloves (WP 0795, Item 38)

Materials/Parts
Grease (WP 0794, Item 22)
Tape (WP 0794, Item 52)
Wire tags (WP 0794, Item 33)
Goggles, industrial (WP 0794, Item 20)
Face shield, industrial (WP 0794, Item 16)

References
TM 9-2355-106-10
TM 9-2355-106-23P
WP 0786
WP 0782

Equipment Condition
Parking brake set (TM 9-2355-106-10)
Transmission set in NEUTRAL (N) (TM 9-2355-106-10)
Engine off (TM 9-2355-106-10)
MAIN POWER switch off (TM 9-2355-106-10)
Wheels chocked (TM 9-2355-106-10)
Batteries disconnected (WP 0404)

REMOVAL

WARNING

Use extreme caution when testing or working on or around electrical circuits. Always assume that electrical circuits are live. Electrical shock can occur upon contact with voltage high enough to cause current flow through muscles or nerves. On Direct Current (DC) systems, generally 1 milliamp of current can be felt, 5 milliamps can cause severe pain, 15 milliamps can cause loss of muscle control, and 70 milliamps can be fatal. Wear protective clothing; ensure skin, clothing, and surrounding areas are dry; do not wear jewelry; and touch only the insulated, nonmetallic parts of electrical components and testing equipment. To prevent electrical arcing, avoid shorting electrical test probes and jumper wires. Electrical arcing can cause bright flashes of light, capable of causing temporary blindness. If electrical injury occurs, immediately shut off power supply and seek medical assistance. Failure to comply may result in serious injury or death to personnel.

Wear protective eye goggles, face shield, and long sleeves when working on or near batteries. Batteries contain corrosive acid and can produce explosive gases. Batteries supply electrical current that can cause burns and electrical shock. Always check electrolyte level with engine off. Avoid leaning over or onto battery. Do not wear jewelry and do not smoke or have open flame or spark near battery. Do not allow tools to contact battery box or battery terminals. Failure to comply may result in damage to equipment and serious injury or death to personnel.

NOTE

Using tags, label all cables and connectors before removal to ensure correct installation.

BATTERY CABLE AND CLEAN POWER HARNESS REMOVAL AND INSTALLATION - (CONTINUED)

1. Remove nut (Figure 1, Item 3) from terminal bolt on positive stud adapter clamp (Figure 1, Item 4) of battery 2 (Figure 1, Item 5).

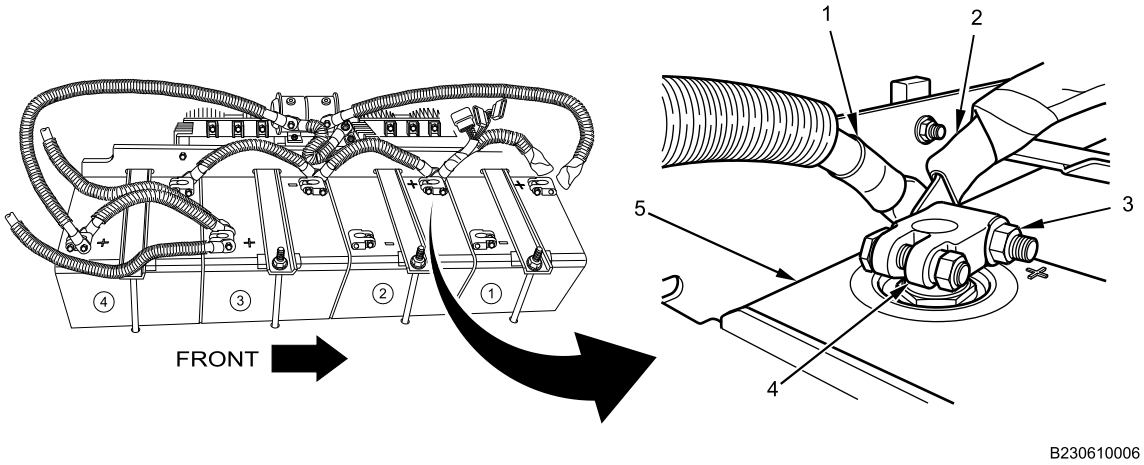

Figure 1. Battery 2 Positive Connections.

2. Remove terminal bolt, battery 2 positive-to-battery 3 ground jumper cable terminal (Figure 1, Item 1), and clean-power cable (Figure 1, Item 2) from battery 2 positive stud adapter clamp (Figure 1, Item 4).
3. Remove clean-power cable (Figure 1, Item 2) from vehicle.

END OF TASK

INSTALLATION

WARNING

Dielectric grease is harmful to skin and eyes. If grease contacts eyes, rinse thoroughly and contact physician if irritation persists. If skin is contacted, wash thoroughly with soap and water. Failure to comply may result in serious injury to personnel.

NOTE

Apply dielectric grease to all electrical connections before installation.

1. Install terminal bolt, battery 2 positive-to-battery 3 ground jumper cable terminal (Figure 2, Item 1), and clean-power cable (Figure 2, Item 2) on battery 2 positive stud adapter clamp (Figure 2, Item 4).

BATTERY CABLE AND CLEAN POWER HARNESS REMOVAL AND INSTALLATION - (CONTINUED)

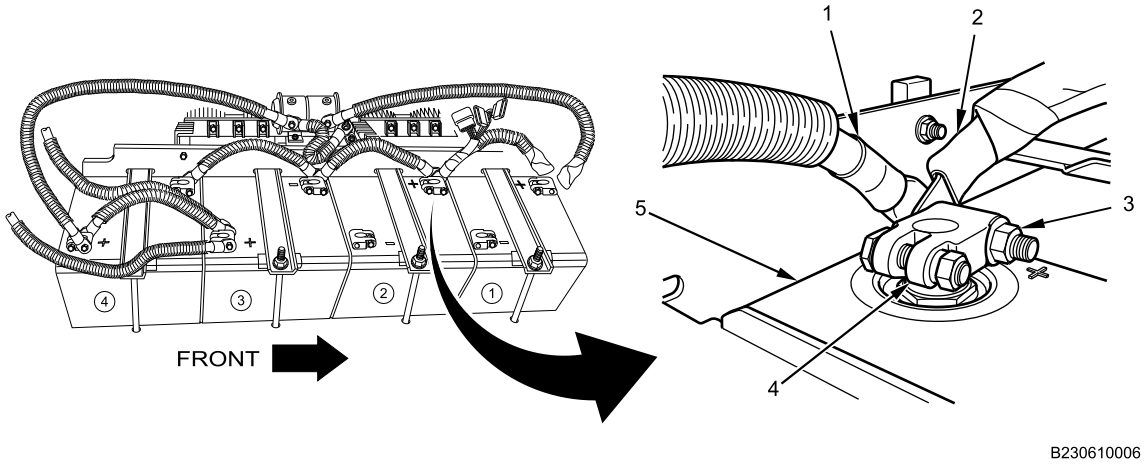

Figure 2. Battery 2 Positive Connections.

2. Install nut (Figure 2, Item 3) on terminal bolt on positive stud adapter clamp (Figure 2, Item 4) of battery 2 (Figure 2, Item 5) and tighten securely.

END OF TASK

FOLLOW-ON MAINTENANCE

1. Connect battery cables (WP 0404).
2. Turn MAIN POWER switch on (TM 9-2355-106-10).
3. Start engine (TM 9-2355-106-10).
4. Turn engine off (TM 9-2355-106-10).
5. Turn MAIN POWER switch off (TM 9-2355-106-10).
6. Remove wheel chocks (TM 9-2355-106-10).

END OF TASK

END OF WORK PACKAGE

FIELD MAINTENANCE

ENGINE CONTROL MODULE (ECM) AND TRANSMISSION CONTROL MODULE (TCM) CLEAN POWER AND GROUND HARNESS REMOVAL AND INSTALLATION

INITIAL SETUP:

Tools and Special Tools
General Mechanic's Tool Kit (GMTK) (WP 0795, Item 37)

Materials/Parts
Grease (WP 0794, Item 22)
Cable lock straps - (12) (WP 0796, Item 124)

References
TM 9-2355-106-10
TM 9-2355-106-23P
WP 0786
WP 0782

Equipment Condition
Parking brake set (TM 9-2355-106-10)
Transmission set in NEUTRAL (N) (TM 9-2355-106-10)
Engine off (TM 9-2355-106-10)
MAIN POWER switch off (TM 9-2355-106-10)
Wheels chocked (TM 9-2355-106-10)
Batteries disconnected (WP 0404)
Belly armor removed (WP 0606)

REMOVAL

WARNING

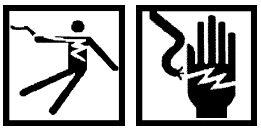

Use extreme caution when testing or working on electrical circuits. Always assume that electrical circuits are live. Electrical shock can occur upon contact with voltage high enough to cause current flow through muscles or nerves. On Direct Current (DC) systems, generally 1 milliamp of current can be felt, 5 milliamps can cause severe pain, 15 milliamps can cause loss of muscle control, and 70 milliamps can be fatal. Wear protective clothing; ensure skin, clothing, and surrounding areas are dry; do not wear jewelry; and touch only the insulated, nonmetallic parts of electrical components and testing equipment. To prevent electrical arcing, avoid shorting electrical test probes and jumper wires. Electrical arcing can cause bright flashes of light, capable of causing temporary blindness. If electrical injury occurs, immediately shut off power supply and seek medical assistance. Failure to comply may result in serious injury or death to personnel.

NOTE

Label all electrical connectors before removal.

ENGINE CONTROL MODULE (ECM) AND TRANSMISSION CONTROL MODULE (TCM) CLEAN POWER AND GROUND HARNESS REMOVAL AND INSTALLATION - (CONTINUED)

1. Disconnect clean positive harness in-line connector (Figure 1, Item 5) from battery cable connector (Figure 1, Item 6).

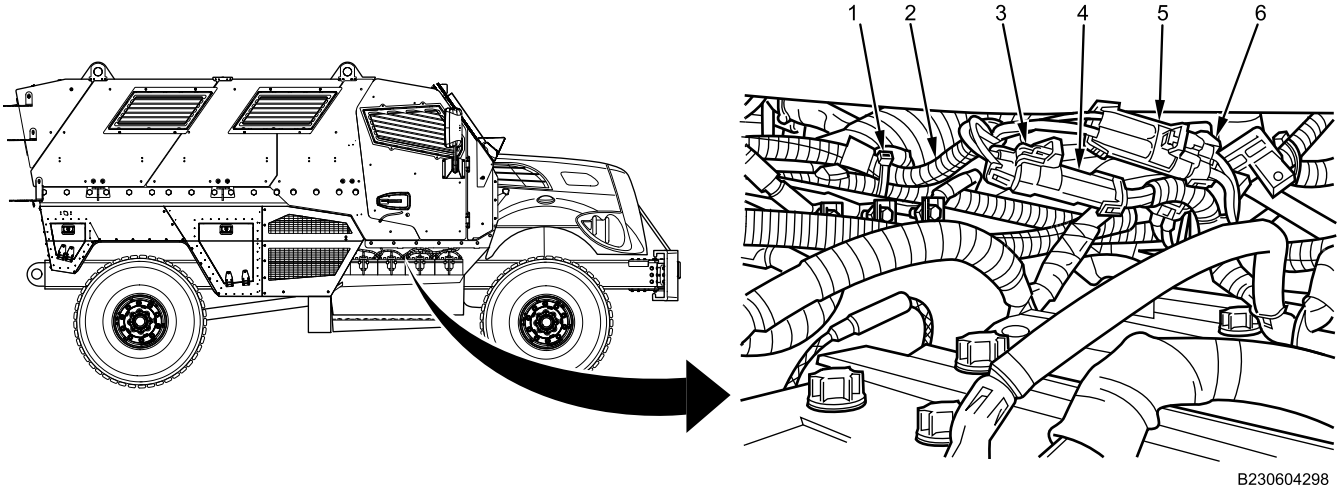

Figure 1. Clean Power and Ground Harness Connections at Battery.

2. Disconnect clean negative harness in-line connector (Figure 1, Item 3) from battery cable connector (Figure 1, Item 4).
3. Remove and discard cable lock straps (Figure 1, Item 1) from harness (Figure 1, Item 2).

NOTE

The number of cable lock straps may vary from illustration. Note quantity and location of cable lock straps for assembly.

4. Remove nut (Figure 2, Item 3) and bolt (Figure 2, Item 1) from harness strap (Figure 2, Item 2) at transmission housing.

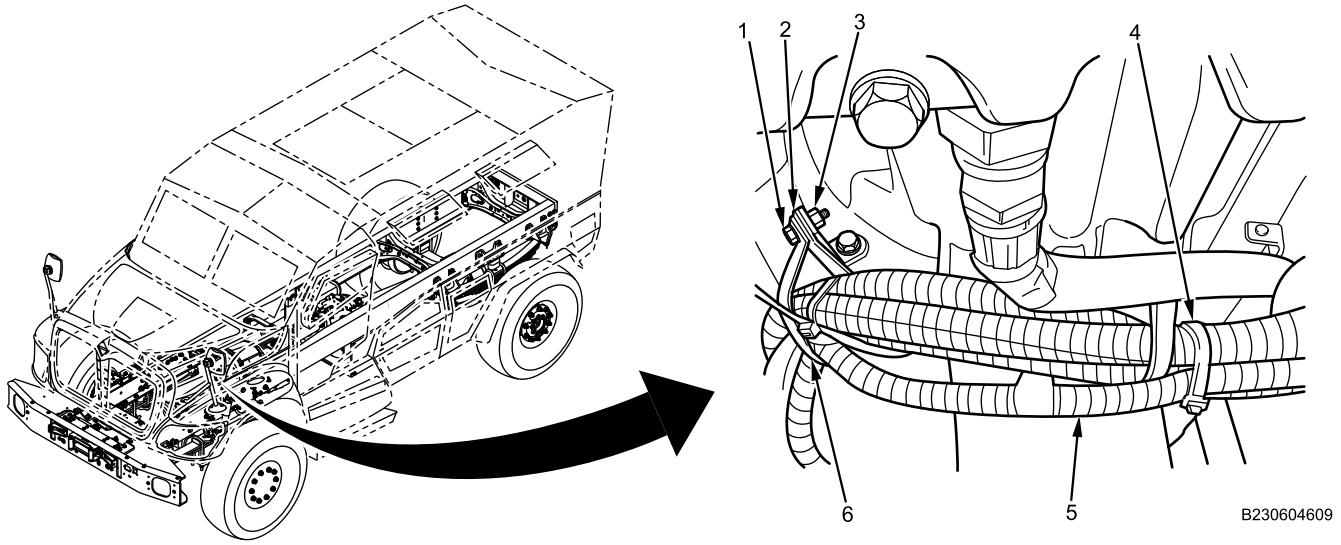

Figure 2. ECM/TCM Clean Harness Removal.

5. Open harness strap (Figure 2, Item 2) and remove clean power and ground harness (Figure 2, Item 5) from strap.

ENGINE CONTROL MODULE (ECM) AND TRANSMISSION CONTROL MODULE (TCM) CLEAN POWER AND GROUND HARNESS REMOVAL AND INSTALLATION - (CONTINUED)

6. Remove and discard cable lock straps (Figure 2, Item 4 and 6) from clean power and ground harness (Figure 2, Item 5) as required.
7. Disconnect ECM clean harness in-line connector (Figure 3, Item 1) from engine harness connector (Figure 3, Item 2).

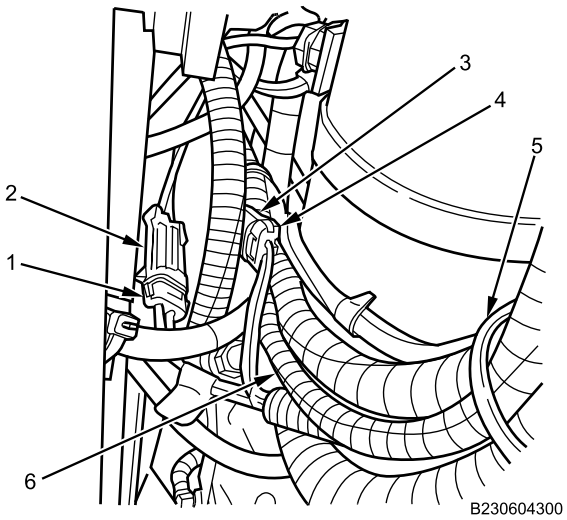

Figure 3. Clean Power and Ground Harness Connectors at Starter Motor.

8. Disconnect TCM clean harness in-line connector (Figure 3, Item 4) from engine harness connector (Figure 3, Item 3).
9. Remove and discard cable lock straps (Figure 3, Item 5) from clean power and ground harness (Figure 3, Item 6) as required.
10. Remove clean power and ground harness (Figure 3, Item 6) from vehicle.

END OF TASK

INSTALLATION

WARNING

Dielectric grease is harmful to skin and eyes. If grease contacts eyes, rinse thoroughly and contact physician if irritation persists. If skin is contacted, wash thoroughly with soap and water. Failure to comply may result in serious injury to personnel.

NOTE

Apply dielectric grease to all electrical connections.

ENGINE CONTROL MODULE (ECM) AND TRANSMISSION CONTROL MODULE (TCM) CLEAN POWER AND GROUND HARNESS REMOVAL AND INSTALLATION - (CONTINUED)

1. Connect ECM clean harness in-line connector (Figure 4, Item 1) to engine harness connector (Figure 4, Item 2).

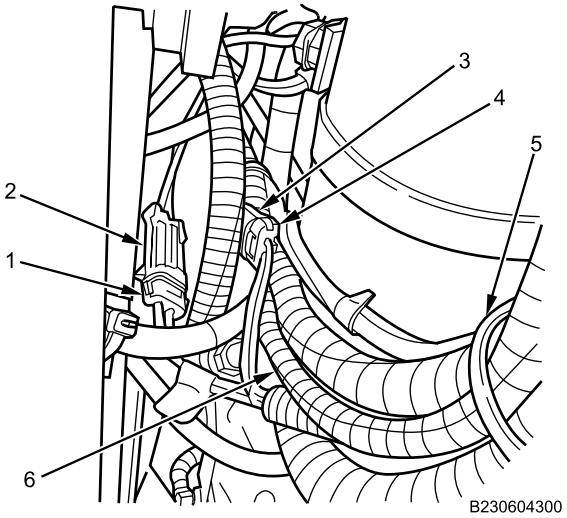

Figure 4. Clean Power and Ground Harness Connectors at Starter Motor.

2. Connect TCM clean harness in-line connector (Figure 4, Item 4) to engine harness connector (Figure 4, Item 3).
3. Install new cable lock straps (Figure 4, Item 5) on clean power and ground harness (Figure 4, Item 6) as required.
4. Install clean power and ground harness (Figure 5, Item 5) in loop strap (Figure 5, Item 2). Close harness strap to secure harnesses.

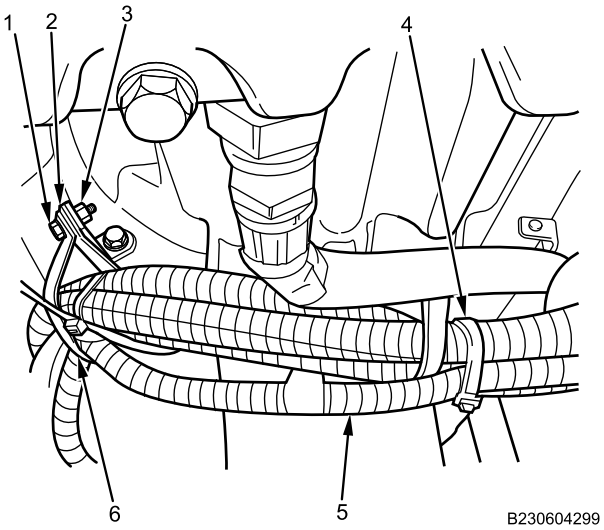

Figure 5. ECM/TCM Clean Harness Installation.

5. Install nut (Figure 5, Item 3), bolt (Figure 5, Item 1), and harness strap (Figure 5, Item 2) on transmission housing. Tighten nut securely.
6. Install new cable lock straps (Figure 5, Item 4 and 6) on clean power and ground harness (Figure 5, Item 5) as required.

ENGINE CONTROL MODULE (ECM) AND TRANSMISSION CONTROL MODULE (TCM) CLEAN POWER AND GROUND HARNESS REMOVAL AND INSTALLATION - (CONTINUED)

7. Connect clean positive harness in-line connector (Figure 6, Item 5) to battery cable connector (Figure 6, Item 6).

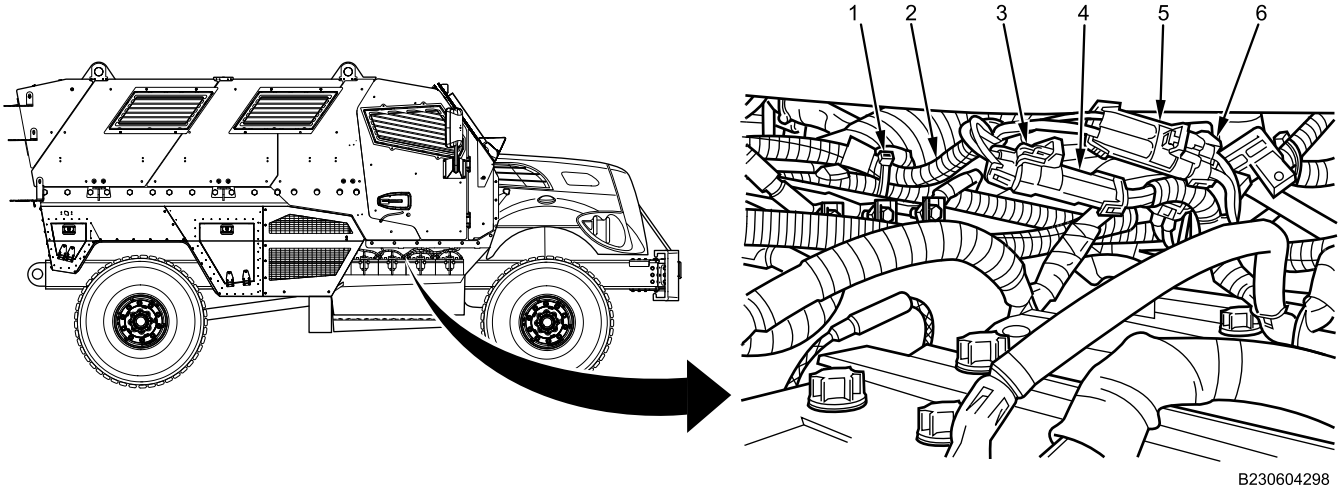

Figure 6. Clean Power and Ground Harness Connections at Battery.

8. Connect clean negative harness in-line connector (Figure 6, Item 3) to battery cable connector (Figure 6, Item 4).
9. Install new cable lock straps (Figure 6, Item 1) on harness (Figure 6, Item 2) as required.

END OF TASK

FOLLOW-ON MAINTENANCE

1. Connect battery cables (WP 0404).
2. Turn MAIN POWER switch on (TM 9-2355-106-10).
3. Start engine (TM 9-2355-106-10).
4. Turn off engine (TM 9-2355-106-10).
5. Turn MAIN POWER switch off (TM 9-2355-106-10).
6. Install belly armor (WP 0606).
7. Remove wheel chocks (TM 9-2355-106-10).

END OF TASK

END OF WORK PACKAGE

FIELD MAINTENANCE

BATTERY CABLES REMOVAL AND INSTALLATION

INITIAL SETUP:

Tools and Special Tools
General Mechanic's Tool Kit (GMTK) (WP 0795, Item 37)
Gloves (WP 0795, Item 38)

Materials/Parts
Grease (WP 0794, Item 22)
Tape (WP 0794, Item 52)
Wire tags (WP 0794, Item 33)
Goggles, industrial (WP 0794, Item 20)
Face shield, industrial (WP 0794, Item 16)

References
TM 9-2355-106-10
TM 9-2355-106-23P
WP 0786
WP 0782

Equipment Condition
Parking brake set (TM 9-2355-106-10)
Transmission set in NEUTRAL (N) (TM 9-2355-106-10)
Engine off (TM 9-2355-106-10)
MAIN POWER switch off (TM 9-2355-106-10)
Wheels chocked (TM 9-2355-106-10)
Exterior battery box armor door removed (WP 0604)
Batteries disconnected (WP 0404)

WARNING

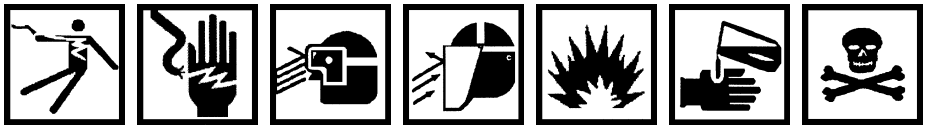

Use extreme caution when testing or working on or around electrical circuits. Always assume that electrical circuits are live. Electrical shock can occur upon contact with voltage high enough to cause current flow through muscles or nerves. On Direct Current (DC) systems, generally 1 milliamp of current can be felt, 5 milliamps can cause severe pain, 15 milliamps can cause loss of muscle control, and 70 milliamps can be fatal. Wear protective clothing; ensure skin, clothing, and surrounding areas are dry; do not wear jewelry; and touch only the insulated, nonmetallic parts of electrical components and testing equipment. To prevent electrical arcing, avoid shorting electrical test probes and jumper wires. Electrical arcing can cause bright flashes of light, capable of causing temporary blindness. If electrical injury occurs, immediately shut off power supply and seek medical assistance. Failure to comply may result in serious injury or death to personnel.

Wear protective eye goggles, face shield, and long sleeves when working on or near batteries. Batteries contain corrosive acid and can produce explosive gases. Batteries supply electrical current that can cause burns and electrical shock. Always check electrolyte level with engine off. Avoid leaning over or onto battery. Do not wear jewelry and do not smoke or have open flame or spark near battery. Do not allow tools to contact battery box or battery terminals. Failure to comply may result in damage to equipment and serious injury or death to personnel.

BATTERY CABLES REMOVAL AND INSTALLATION - (CONTINUED)

REMOVAL

NOTE

Using tags, label all cables and connectors before removal to ensure correct installation.

1. Remove nut (Figure 1, Item 3) from terminal bolt on positive stud adapter clamp (Figure 1, Item 4) of battery 2 (Figure 1, Item 5).

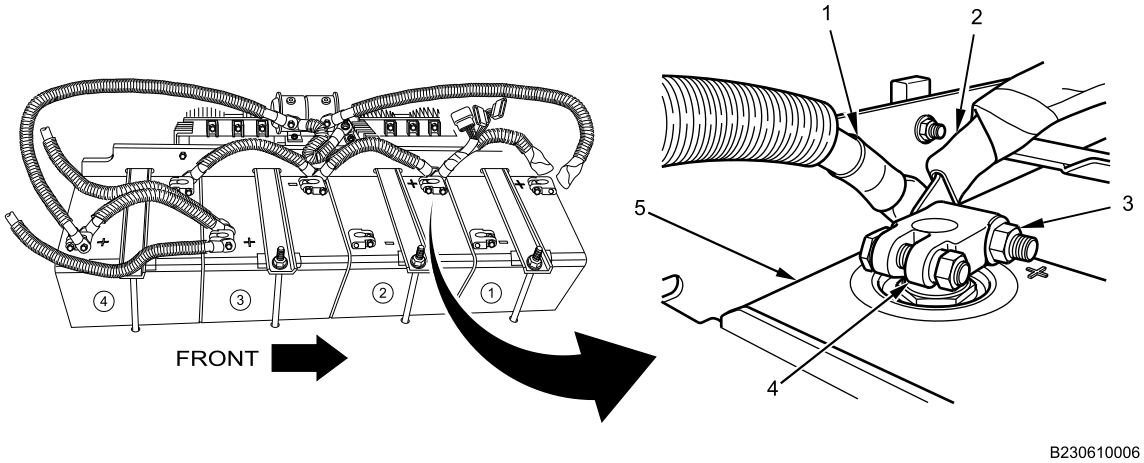

Figure 1. Battery 2 Positive Connections.

2. Remove terminal bolt, battery 2 positive-to-battery 3 ground jumper cable terminal (Figure 1, Item 1), and clean-power cable (Figure 1, Item 2) from battery 2 positive stud adapter clamp (Figure 1, Item 4).
3. Remove clean-power cable (Figure 1, Item 2) from vehicle.

BATTERY CABLES REMOVAL AND INSTALLATION - (CONTINUED)

4. Remove nut (Figure 2, Item 4) from terminal bolt on negative stud adapter clamp (Figure 2, Item 5) of battery 3 (Figure 2, Item 1).

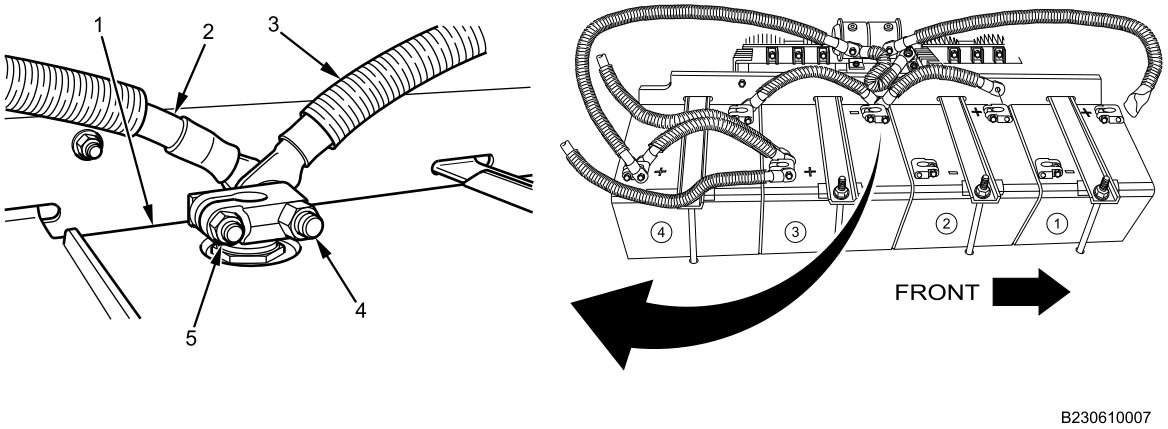

Figure 2. Battery 3 Negative Connections.

5. Remove terminal bolt, battery 3 ground-to-battery 4 ground jumper cable (Figure 2, Item 2), and battery 2 positive-to-battery 3 ground jumper cable (Figure 2, Item 3) from battery 3 negative stud adapter clamp (Figure 2, Item 5).
6. Remove battery 2 positive-to-battery 3 ground jumper cable (Figure 2, Item 3) from vehicle.
7. Remove nut (Figure 3, Item 4) from terminal bolt on negative stud adapter clamp (Figure 3, Item 2) of battery 4 (Figure 3, Item 1).

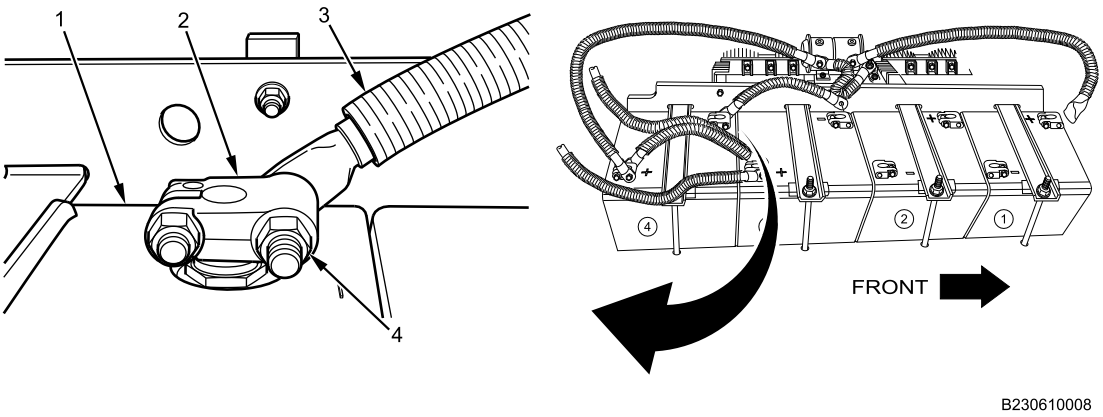

Figure 3. Battery 4 Negative Connections.

8. Remove terminal bolt and battery 3 ground-to-battery 4 ground jumper cable (Figure 3, Item 3) from battery 4 negative stud adapter clamp (Figure 3, Item 2).
9. Remove battery 3 ground-to-battery 4 ground jumper cable (Figure 3, Item 3) from vehicle.

BATTERY CABLES REMOVAL AND INSTALLATION - (CONTINUED)

10. Remove nut (Figure 4, Item 3) from terminal bolt on positive stud adapter clamp (Figure 4, Item 2) of battery 3 (Figure 4, Item 4).

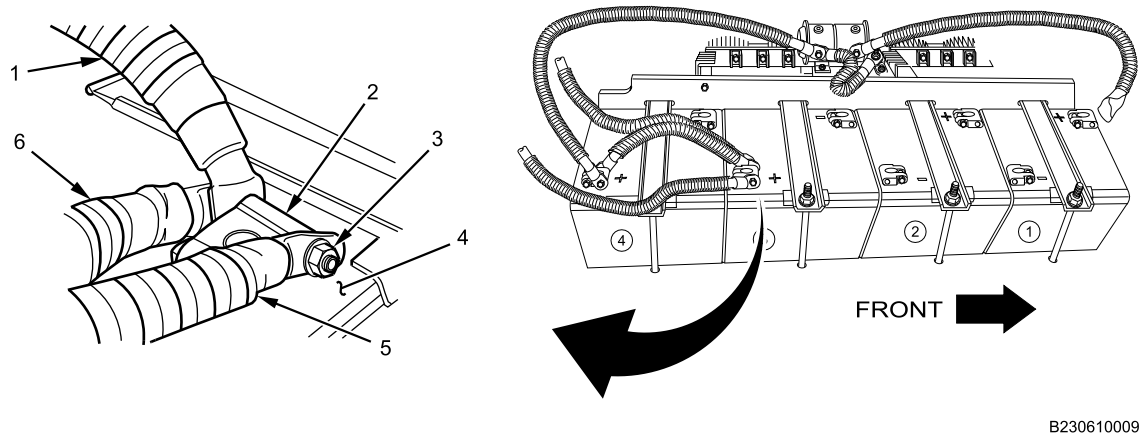

Figure 4. Battery 3 Positive Connections.

11. Remove starter power feed cable terminal (Figure 4, Item 5) from terminal bolt on battery 3 positive stud adapter clamp (Figure 4, Item 2).
12. Wrap loose end of starter motor feed cable terminal (Figure 4, Item 5) with electrical tape to prevent energizing circuit.
13. Remove terminal bolt, NATO power feed cable terminal (Figure 4, Item 1), and battery 3 positive-to-battery 4 positive jumper cable (Figure 4, Item 6) from battery 3 positive stud adapter clamp (Figure 4, Item 2).
14. Wrap loose end of NATO power feed cable terminal (Figure 4, Item 1) with electrical tape to prevent energizing circuit.
15. Remove battery 3 positive-to-battery 4 positive jumper cable (Figure 4, Item 6).

BATTERY CABLES REMOVAL AND INSTALLATION - (CONTINUED)

16. Remove nut (Figure 5, Item 3) from terminal bolt on positive stud adapter clamp (Figure 5, Item 4) of battery 4 (Figure 5, Item 5).

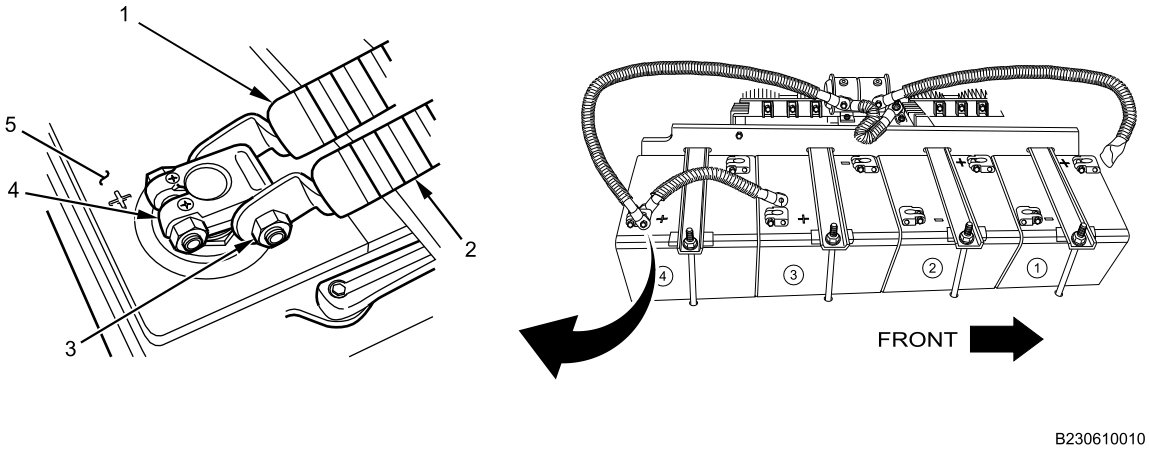

Figure 5. Battery 4 Positive Connections.

17. Remove 24V battery disconnect solenoid switch terminal (Figure 5, Item 2) from terminal bolt on battery 4 positive stud adapter clamp (Figure 5, Item 4).
18. Wrap loose end of 24V battery disconnect solenoid switch terminal (Figure 5, Item 2) with electrical tape to prevent energizing circuits.
19. Remove terminal bolt and battery 3 positive-to-battery 4 positive jumper cable (Figure 5, Item 1) from battery 4 positive stud adapter clamp (Figure 5, Item 4).
20. Remove battery 3 positive-to-battery 4 positive jumper cable (Figure 5, Item 1) from vehicle.

END OF TASK

BATTERY CABLES REMOVAL AND INSTALLATION - (CONTINUED)

INSTALLATION

WARNING

Dielectric grease is harmful to skin and eyes. If grease contacts eyes, rinse thoroughly and contact physician if irritation persists. If skin is contacted, wash thoroughly with soap and water. Failure to comply may result in serious injury to personnel.

CAUTION

Pay close attention to cable and connector labels. Wire colors may not match. Incorrect installation may result in damage to electrical system.

NOTE

Remove electrical tape and ensure battery cable terminals are clean before applying dielectric grease to all electrical connections.

Apply dielectric grease to all electrical connections before installation.

1. Install terminal bolt and battery 3 positive-to-battery 4 positive jumper cable (Figure 6, Item 1) on battery 4 positive stud adapter clamp (Figure 6, Item 4).

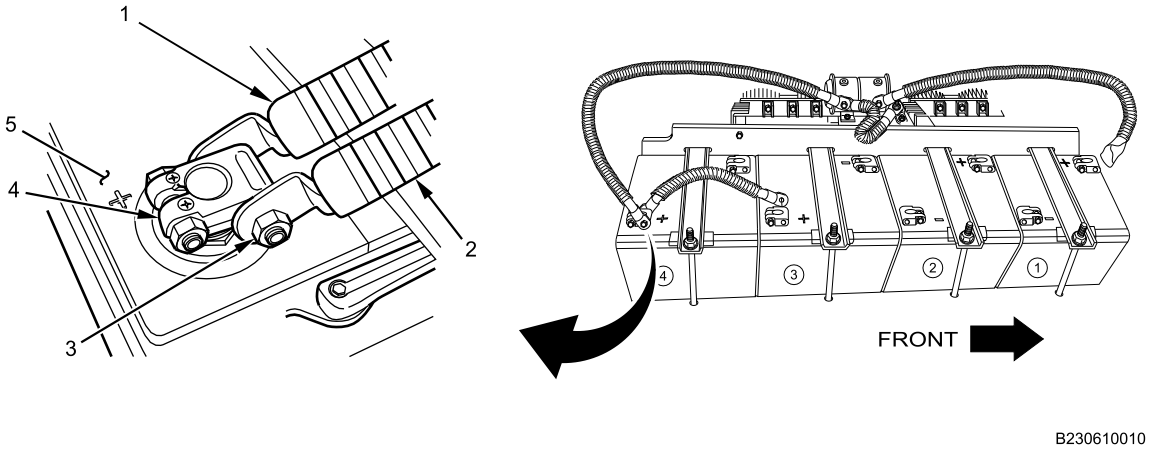

Figure 6. Battery 4 Positive Connections.

2. Install 24V battery disconnect solenoid switch terminal (Figure 6, Item 2) on terminal bolt on battery 4 positive stud adapter clamp (Figure 6, Item 4).
3. Install nut (Figure 6, Item 3) on terminal bolt on positive stud adapter clamp (Figure 6, Item 4) of battery 4 (Figure 6, Item 5) and tighten securely.
4. Install terminal bolt, NATO power feed cable terminal (Figure 7, Item 1), and battery 3 positive-to-battery 4 positive jumper cable (Figure 7, Item 6) on battery 3 positive stud adapter clamp (Figure 7, Item 2).

BATTERY CABLES REMOVAL AND INSTALLATION - (CONTINUED)

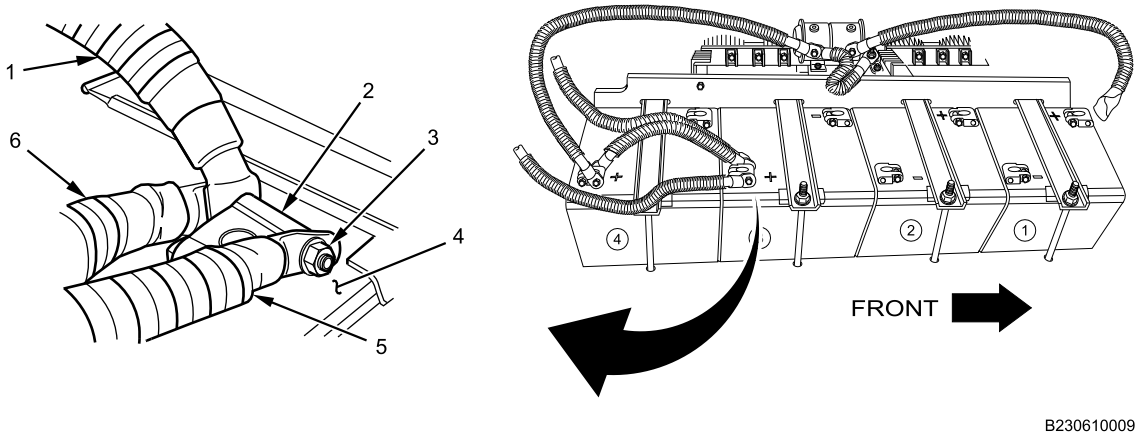

Figure 7. Battery 3 Positive Connections.

5. Install starter power feed cable terminal (Figure 7, Item 5) on terminal bolt on battery 3 positive stud adapter clamp (Figure 7, Item 2).
6. Install nut (Figure 7, Item 3) on terminal bolt on positive stud adapter clamp (Figure 7, Item 2) of battery 3 (Figure 7, Item 4) and tighten securely.
7. Install terminal bolt and battery 3 ground-to-battery 4 ground jumper cable (Figure 8, Item 2) on battery 4 negative stud adapter clamp (Figure 8, Item 2).

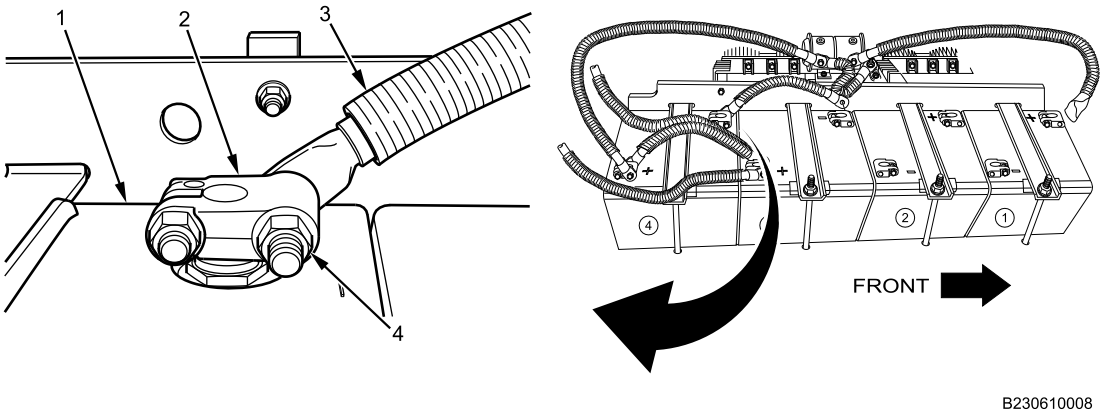

Figure 8. Battery 4 Negative Connections.

8. Install nut (Figure 8, Item 4) on terminal bolt on negative stud adapter clamp (Figure 8, Item 2) of battery 4 (Figure 8, Item 1) and tighten securely.

BATTERY CABLES REMOVAL AND INSTALLATION - (CONTINUED)

9. Install terminal bolt, battery 3 ground-to-battery 4 ground jumper cable terminal (Figure 9, Item 2), and battery 2 positive-to-battery 3 ground jumper cable terminal (Figure 9, Item 3) on battery 3 negative stud adapter clamp (Figure 9, Item 5).

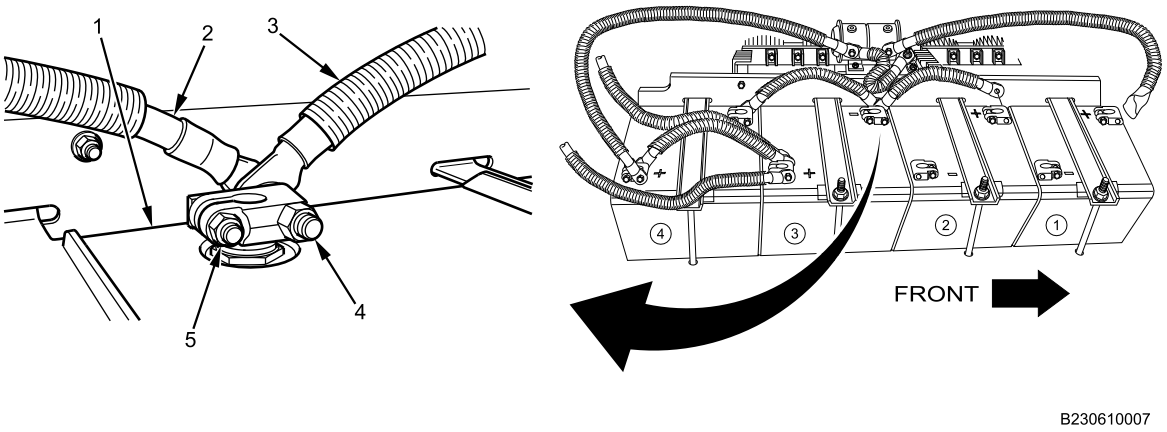

Figure 9. Battery 3 Negative Connections.

10. Install nut (Figure 9, Item 4) on terminal bolt on negative stud adapter clamp (Figure 9, Item 5) of battery 3 (Figure 9, Item 1) and tighten securely.
11. Install terminal bolt, battery 2 positive-to-battery 3 ground jumper cable terminal (Figure 10, Item 1), and clean-power cable (Figure 10, Item 2) on battery 2 positive stud adapter clamp (Figure 10, Item 4).

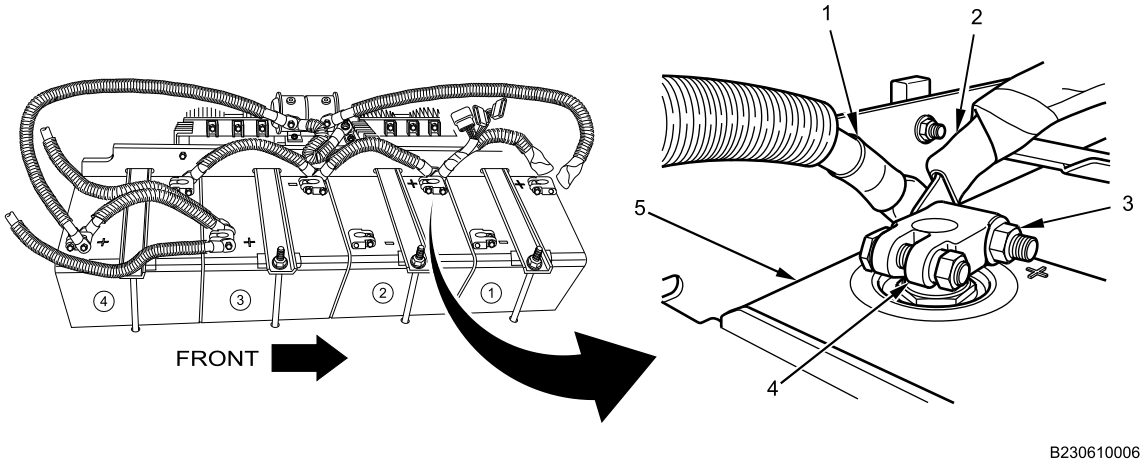

Figure 10. Battery 2 Positive Connections.

12. Install nut (Figure 10, Item 3) on terminal bolt on positive stud adapter clamp (Figure 10, Item 4) of battery 2 (Figure 10, Item 5) and tighten securely.

END OF TASK

BATTERY CABLES REMOVAL AND INSTALLATION - (CONTINUED)

FOLLOW-ON MAINTENANCE

1. Connect batteries (WP 0404).
2. Turn MAIN POWER switch on (TM 9-2355-106-10).
3. Start engine (TM 9-2355-106-10).
4. Turn engine off (TM 9-2355-106-10).
5. Turn MAIN POWER switch off (TM 9-2355-106-10).
6. Install exterior battery box armor door (WP 0604).
7. Remove wheel chocks (TM 9-2355-106-10).

END OF TASK

END OF WORK PACKAGE

FIELD MAINTENANCE

BODY GROUND TO FIREWALL GROUND CABLE REMOVAL AND INSTALLATION

INITIAL SETUP:

Tools and Special Tools
General Mechanic's Tool Kit (GMTK) (WP 0795, Item 37)

Materials/Parts
Grease (WP 0794, Item 22)
Cable lock strap - (2) (WP 0796, Item 124)

References
TM 9-2355-106-10
TM 9-2355-106-23P
WP 0786
WP 0782

Equipment Condition
Parking brake set (TM 9-2355-106-10)
Transmission set in NEUTRAL (N) (TM 9-2355-106-10)
Engine off (TM 9-2355-106-10)
MAIN POWER switch off (TM 9-2355-106-10)
Wheels chocked (TM 9-2355-106-10)
Engine hood open and secured (TM 9-2355-106-10)
Battery box armor door removed (WP 0604)
Battery cables disconnected (WP 0404)

REMOVAL

WARNING

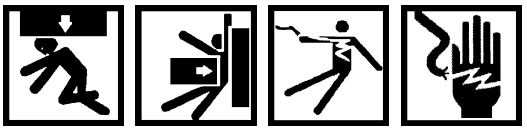

Engine hood is extremely heavy and requires two-person lift. Ensure that there is adequate space in front of the vehicle to open hood completely without pinning or pinching personnel between hood and any other structure. Use extreme care when working under hood and make sure it is properly supported. Failure to comply may result in serious injury or death to personnel.

Use extreme caution when testing or working on or around electrical circuits. Always assume that electrical circuits are live. Electrical shock can occur upon contact with voltage high enough to cause current flow through muscles or nerves. On Direct Current (DC) systems, generally 1 milliamp of current can be felt, 5 milliamps can cause severe pain, 15 milliamps can cause loss of muscle control, and 70 milliamps can be fatal. Wear protective clothing; ensure skin, clothing, and surrounding areas are dry; do not wear jewelry; and touch only the insulated, nonmetallic parts of electrical components and testing equipment. To prevent electrical arcing, avoid shorting electrical test probes and jumper wires. Electrical arcing can cause bright flashes of light, capable of causing temporary blindness. If electrical injury occurs, immediately shut off power supply and seek medical assistance. Failure to comply may result in serious injury or death to personnel.

NOTE

Note size and placement of cable lock straps to aid in installation.

BODY GROUND TO FIREWALL GROUND CABLE REMOVAL AND INSTALLATION - (CONTINUED)

1. Remove bolt (Figure 3, Item 1) and washer (Figure 3, Item 4) from right side wheel deflector (Figure 3, Item 3) and remove ground cable (Figure 3, Item 2).

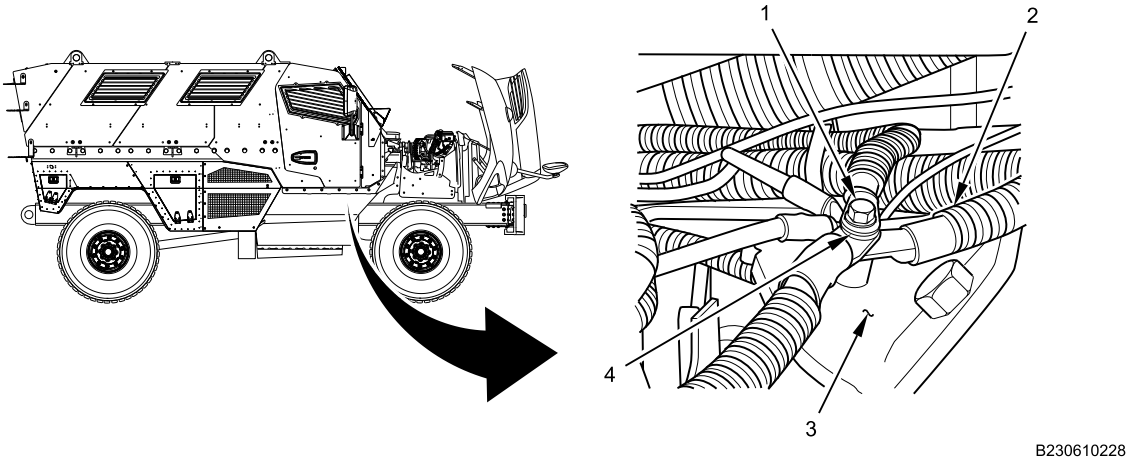

Figure 1. Ground Cable.

2. Remove and discard cable lock strap (Figure 2, Item 4) from ground cable (Figure 2, Item 1).

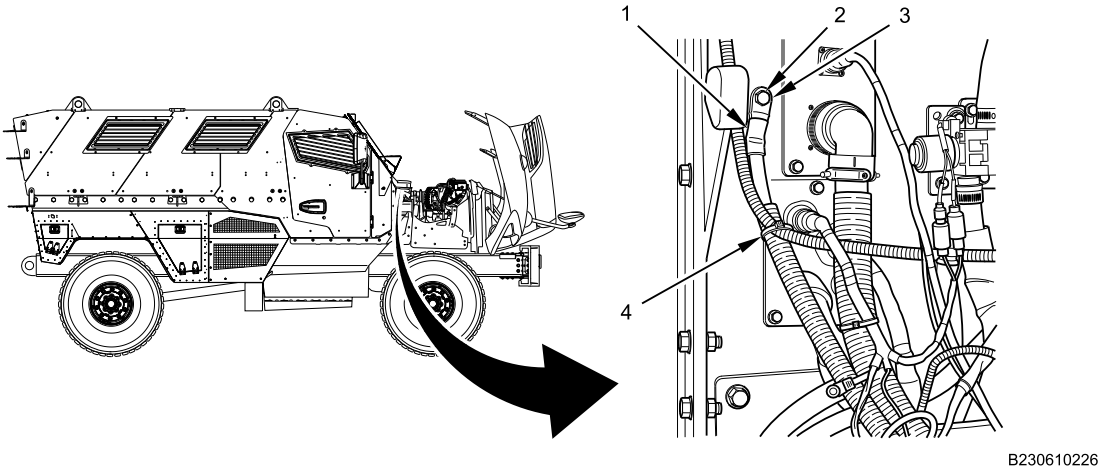

Figure 2. Firewall Ground Cable.

3. Remove bolt (Figure 2, Item 2), washer (Figure 2, Item 3), and ground cable (Figure 2, Item 1) from firewall.

END OF TASK

BODY GROUND TO FIREWALL GROUND CABLE REMOVAL AND INSTALLATION - (CONTINUED)

INSTALLATION

WARNING

Dielectric grease is harmful to skin and eyes. If grease contacts eyes, rinse thoroughly and contact physician if irritation persists. If skin is contacted, wash thoroughly with soap and water. Failure to comply may result in serious injury to personnel.

NOTE

Apply dielectric grease to electrical connector.

1. Install ground cable (Figure 3, Item 1) on firewall with bolt (Figure 3, Item 3) and washer (Figure 3, Item 2). Tighten securely.

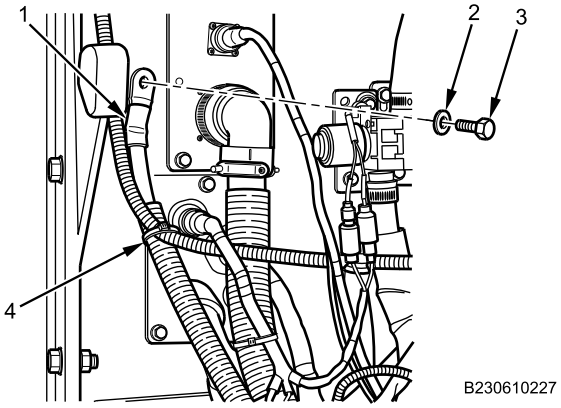

Figure 3. Firewall Ground Cable.

2. Install new cable lock strap (Figure 3, Item 4) on ground cable (Figure 3, Item 1) as noted in removal.

BODY GROUND TO FIREWALL GROUND CABLE REMOVAL AND INSTALLATION - (CONTINUED)

3. Install ground cable (Figure 4, Item 3) on right side wheel deflector (Figure 4, Item 4) with bolt (Figure 4, Item 1) and washer (Figure 4, Item 2). Tighten securely.

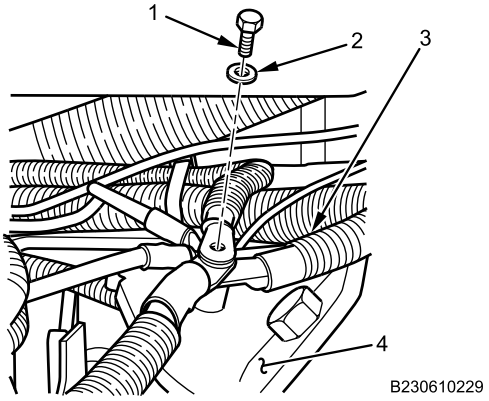

Figure 4. Ground Cable.

END OF TASK

FOLLOW-ON MAINTENANCE

1. Connect battery cables (WP 0404).
2. Install battery box armor door (WP 0604).
3. Close engine hood (TM 9-2355-106-10).
4. Remove wheel chocks (TM 9-2355-106-10).

END OF TASK

END OF WORK PACKAGE

FIELD MAINTENANCE

BATTERY STUD ADAPTER TERMINAL CLAMP REMOVAL AND INSTALLATION

INITIAL SETUP:

Tools and Special Tools
General Mechanic's Tool Kit (GMTK) (WP 0795, Item 37)
Battery Service Kit (WP 0795, Item 15)
Gloves (WP 0795, Item 38)

Materials/Parts
Grease (WP 0794, Item 22)
Goggles, industrial (WP 0794, Item 20)
Face shield, industrial (WP 0794, Item 16)

References
TM 9-2355-106-10
TM 9-2355-106-23P
WP 0786
WP 0782

Equipment Condition
Parking brake set (TM 9-2355-106-10)
Transmission set in NEUTRAL (N) (TM 9-2355-106-10)
Engine off (TM 9-2355-106-10)
MAIN POWER switch off (TM 9-2355-106-10)
Wheels chocked (TM 9-2355-106-10)
Battery cables removed (WP 0407)

WARNING

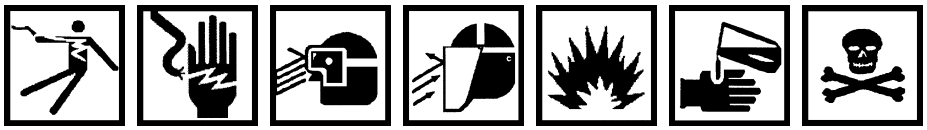

Use extreme caution when testing or working on or around electrical circuits. Always assume that electrical circuits are live. Electrical shock can occur upon contact with voltage high enough to cause current flow through muscles or nerves. On Direct Current (DC) systems, generally 1 milliamp of current can be felt, 5 milliamps can cause severe pain, 15 milliamps can cause loss of muscle control, and 70 milliamps can be fatal. Wear protective clothing; ensure skin, clothing, and surrounding areas are dry; do not wear jewelry; and touch only the insulated, nonmetallic parts of electrical components and testing equipment. To prevent electrical arcing, avoid shorting electrical test probes and jumper wires. Electrical arcing can cause bright flashes of light, capable of causing temporary blindness. If electrical injury occurs, immediately shut off power supply and seek medical assistance. Failure to comply may result in serious injury or death to personnel.

Wear protective eye goggles, face shield, and long sleeves when working on or near batteries. Batteries contain corrosive acid and can produce explosive gases. Batteries supply electrical current that can cause burns and electrical shock. Always check electrolyte level with engine off. Avoid leaning over or onto battery. Do not wear jewelry and do not smoke or have open flame or spark near battery. Do not allow tools to contact battery box or battery terminals. Failure to comply may result in damage to equipment and serious injury or death to personnel.

BATTERY STUD ADAPTER TERMINAL CLAMP REMOVAL AND INSTALLATION - (CONTINUED)

REMOVAL

1. Loosen nut (Figure 1, Item 4) from battery stud adapter terminal clamp (Figure 1, Item 3).

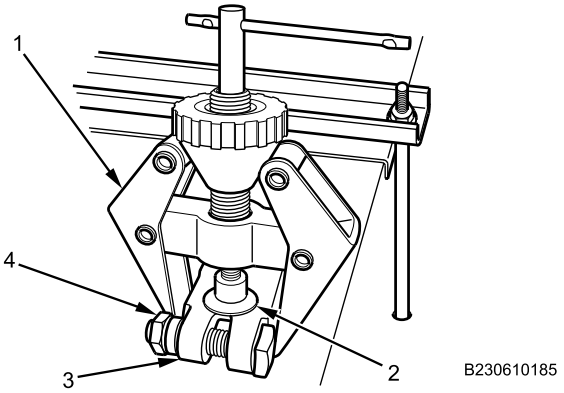

Figure 1. Battery Stud Adapter Terminal Clamp Removal.

2. Using battery clamp puller (Figure 1, Item 1), remove battery stud adapter terminal clamp (Figure 1, Item 3) from battery terminal (Figure 1, Item 2).

END OF TASK

TEST AND INSPECTION

1. Inspect battery stud adapter terminal clamp (Figure 2, Item 1) for cracks (Figure 2, Item 2 and 3). Discard clamp if any cracks are found.

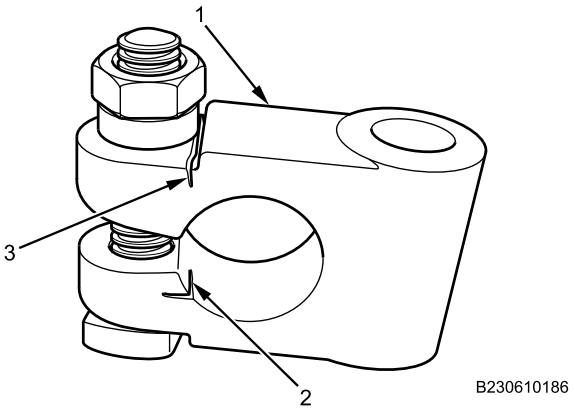

Figure 2. Battery Stud Adapter Terminal Clamp Inspection.

END OF TASK

CLEANING

1. Using battery terminal cleaner (Figure 3, Item 2), remove any tarnish or corrosion from battery stud adapter terminal clamp (Figure 3, Item 1).

BATTERY STUD ADAPTER TERMINAL CLAMP REMOVAL AND INSTALLATION - (CONTINUED)

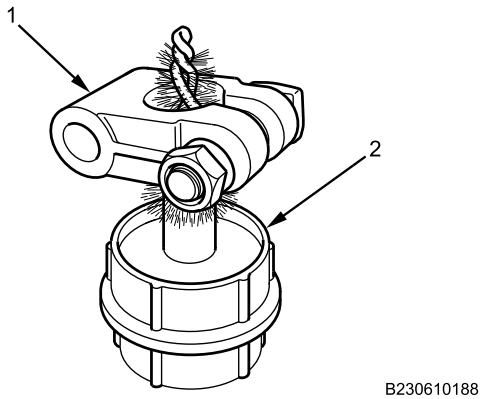

Figure 3. Battery Stud Adapter Terminal Clamp Cleaning.

2. Using battery terminal cleaner (Figure 4, Item 1), remove any tarnish or corrosion from battery terminal (Figure 4, Item 2).

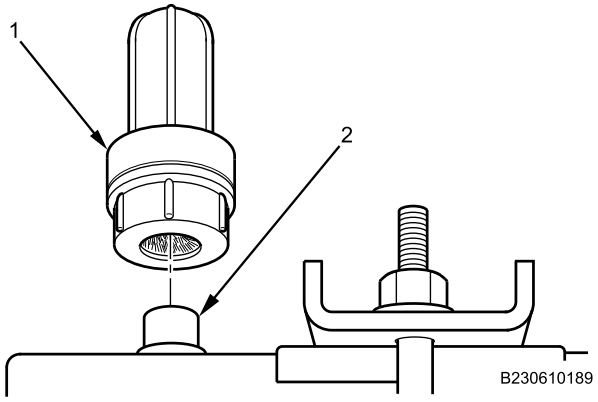

Figure 4. Battery Terminal Cleaning.

END OF TASK

BATTERY STUD ADAPTER TERMINAL CLAMP REMOVAL AND INSTALLATION - (CONTINUED)

INSTALLATION

WARNING

Negative and positive battery posts are different sizes. Use the correct terminal clamp for each battery post to ensure proper clamp loads between the battery post and battery stud adapter terminal clamp. Failure to comply may result in damage to equipment and serious injury or death to personnel.

1. Test-fit battery stud adapter terminal clamp (Figure 5, Item 2) on battery terminal. If necessary, enlarge clamp with battery clamp spreader (Figure 5, Item 1) to attain proper fit.

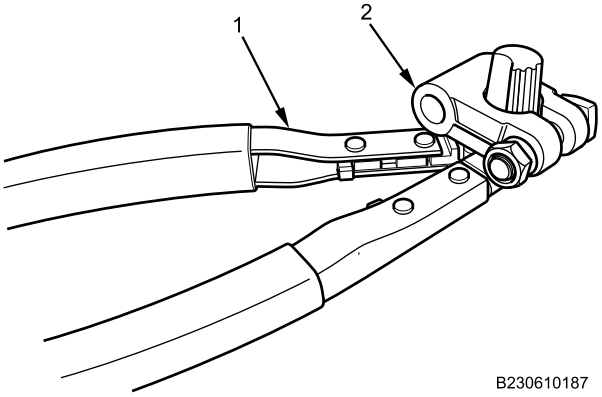

Figure 5. Battery Clamp Spreader.

WARNING

Dielectric grease is harmful to skin and eyes. If grease contacts eyes, rinse thoroughly and contact physician if irritation persists. If skin is contacted, wash thoroughly with soap and water. Failure to comply may result in serious injury to personnel.

NOTE

Apply dielectric grease to battery stud adapter terminal clamp and battery terminal before installation.

2. Install battery stud adapter terminal clamp (Figure 6, Item 1) on battery terminal (Figure 6, Item 2). Tighten nut (Figure 6, Item 3) securely.

BATTERY STUD ADAPTER TERMINAL CLAMP REMOVAL AND INSTALLATION - (CONTINUED)

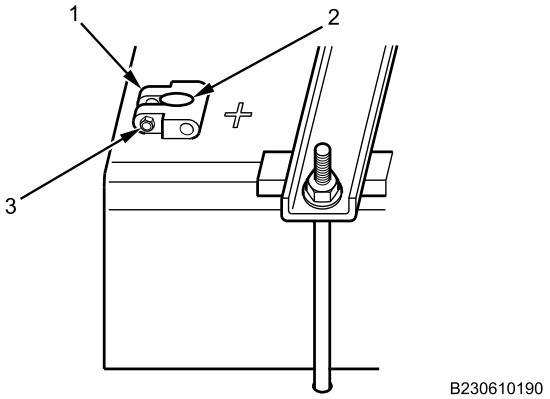

Figure 6. Battery Stud Adapter Terminal Clamp Installation.

END OF TASK

FOLLOW-ON MAINTENANCE

1. Install battery cables (WP 0407).
2. Turn MAIN POWER switch on (TM 9-2355-106-10).
3. Start engine (TM 9-2355-106-10).
4. Turn engine off (TM 9-2355-106-10).
5. Turn MAIN POWER switch off (TM 9-2355-106-10).
6. Remove wheel chocks (TM 9-2355-106-10).

END OF TASK

END OF WORK PACKAGE

FIELD MAINTENANCE

BATTERY BODY GROUND CABLE REMOVAL AND INSTALLATION

INITIAL SETUP:

Tools and Special Tools
General Mechanic's Tool Kit (GMTK) (WP 0795, Item 37)

Materials/Parts
Grease (WP 0794, Item 22)
Wire tags (WP 0794, Item 33)

References
TM 9-2355-106-10
TM 9-2355-106-23P
WP 0786
WP 0782

Equipment Condition
Parking brake set (TM 9-2355-106-10)
Transmission set in NEUTRAL (N) (TM 9-2355-106-10)
Engine off (TM 9-2355-106-10)
MAIN POWER switch off (TM 9-2355-106-10)
Wheels chocked (TM 9-2355-106-10)
Batteries disconnected (WP 0404)

WARNING

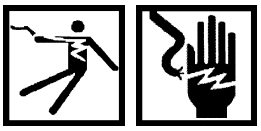

Use extreme caution when testing or working on electrical circuits. Always assume that electrical circuits are live. Electrical shock can occur upon contact with voltage high enough to cause current flow through muscles or nerves. On Direct Current (DC) systems, generally 1 milliamp of current can be felt, 5 milliamps can cause severe pain, 15 milliamps can cause loss of muscle control, and 70 milliamps can be fatal. Wear protective clothing; ensure skin, clothing, and surrounding areas are dry; do not wear jewelry; and touch only the insulated, nonmetallic parts of electrical components and testing equipment. To prevent electrical arcing, avoid shorting electrical test probes and jumper wires. Electrical arcing can cause bright flashes of light, capable of causing temporary blindness. If electrical injury occurs, immediately shut off power supply and seek medical assistance. Failure to comply may result in serious injury or death to personnel.

BATTERY BODY GROUND CABLE REMOVAL AND INSTALLATION - (CONTINUED)

REMOVAL

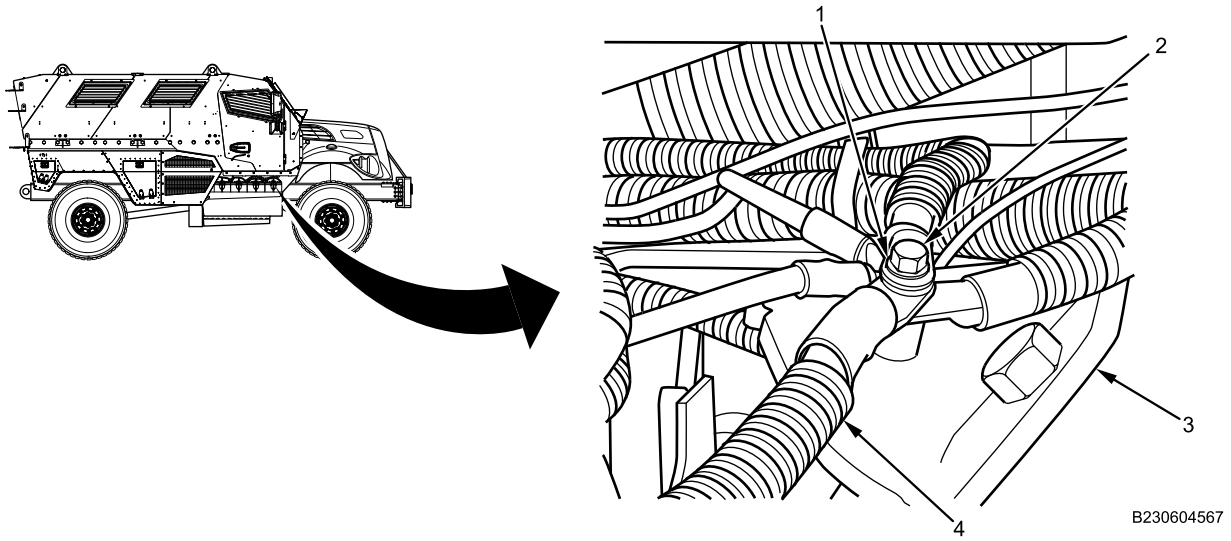

Figure 1. Battery Body Ground Cable Removal.

NOTE

Label all electrical connectors before removal.

1. Remove bolt (Figure 1, Item 2) and flat washer (Figure 1, Item 1) from inner wheel deflector bracket (Figure 1, Item 3).
2. Remove battery cable (Figure 1, Item 4) from vehicle.

END OF TASK

BATTERY BODY GROUND CABLE REMOVAL AND INSTALLATION - (CONTINUED)

INSTALLATION

WARNING

Dielectric grease is harmful to skin and eyes. If grease contacts eyes, rinse thoroughly and contact physician if irritation persists. If skin is contacted, wash thoroughly with soap and water. Failure to comply may result in serious injury to personnel.

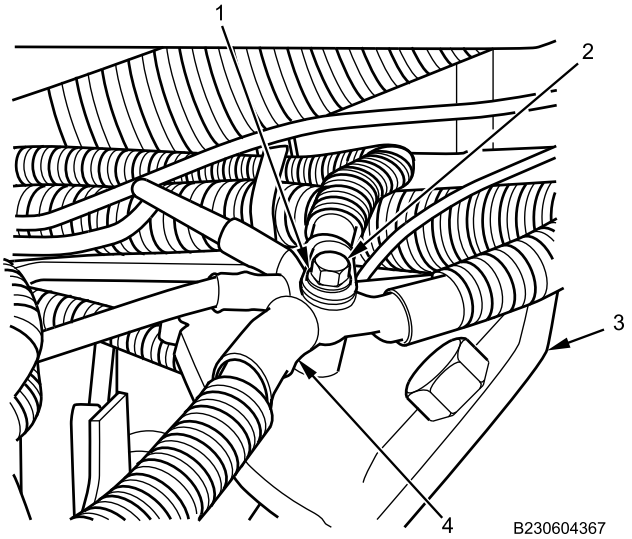

Figure 2. Battery Body Ground Cable Installation.

1. Apply dielectric grease to all battery cable ends (Figure 2, Item 4).
2. Install battery cable (Figure 2, Item 4) on inner wheel deflector bracket (Figure 2, Item 3) with flat washer (Figure 2, Item 1) and bolt (Figure 2, Item 2). Tighten bolt securely.

END OF TASK

FOLLOW-ON MAINTENANCE

1. Connect battery cables (WP 0404).
2. Turn MAIN POWER switch on (TM 9-2355-106-10).
3. Start engine (TM 9-2355-106-10).
4. Turn engine off (TM 9-2355-106-10).
5. Turn MAIN POWER switch off (TM 9-2355-106-10).
6. Remove wheel chocks (TM 9-2355-106-10).

END OF TASK

END OF WORK PACKAGE

FIELD MAINTENANCE

INSTRUMENT PANEL (IP) FEED HARNESS REMOVAL AND INSTALLATION

INITIAL SETUP:

Tools and Special Tools
General Mechanic's Tool Kit (GMTK) (WP 0795, Item 37)

Materials/Parts
Grease (WP 0794, Item 22)
Wire tags (WP 0794, Item 33)
Cable lock straps - (12) (WP 0796, Item 124)
Lockwasher (WP 0796, Item 9)
Locknut (WP 0796, Item 143)

References
TM 9-2355-106-10
TM 9-2355-106-23P
WP 0786
WP 0782

Equipment Condition
Parking brake set (TM 9-2355-106-10)
Transmission set in NEUTRAL (N) (TM 9-2355-106-10)
Engine off (TM 9-2355-106-10)
MAIN POWER switch off (TM 9-2355-106-10)
Wheels chocked (TM 9-2355-106-10)
Engine hood open and secured (TM 9-2355-106-10)
Batteries disconnected (WP 0404)
Belly armor removed (WP 0606)
Air cleaner assembly removed (WP 0257)
Left side engine armor plate removed (WP 0597)

WARNING

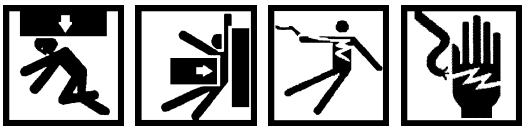

Engine hood is extremely heavy and requires two-person lift. Ensure that there is adequate space in front of the vehicle to open hood completely without pinning or pinching personnel between hood and any other structure. Use extreme care when working under hood and make sure it is properly supported. Failure to comply may result in serious injury or death to personnel.

Use extreme caution when testing or working on or around electrical circuits. Always assume that electrical circuits are live. Electrical shock can occur upon contact with voltage high enough to cause current flow through muscles or nerves. On Direct Current (DC) systems, generally 1 milliamp of current can be felt, 5 milliamps can cause severe pain, 15 milliamps can cause loss of muscle control, and 70 milliamps can be fatal. Wear protective clothing; ensure skin, clothing, and surrounding areas are dry; do not wear jewelry; and touch only the insulated, nonmetallic parts of electrical components and testing equipment. To prevent electrical arcing, avoid shorting electrical test probes and jumper wires. Electrical arcing can cause bright flashes of light, capable of causing temporary blindness. If electrical injury occurs, immediately shut off power supply and seek medical assistance. Failure to comply may result in serious injury or death to personnel.

NOTE

Label all electrical connectors before removal to aid in installation.

The number of cable lock straps may vary from illustration. Note quantity and location of cable lock straps for assembly.

Vehicle may have multiple P-clamps.

INSTRUMENT PANEL (IP) FEED HARNESS REMOVAL AND INSTALLATION - (CONTINUED)

REMOVAL

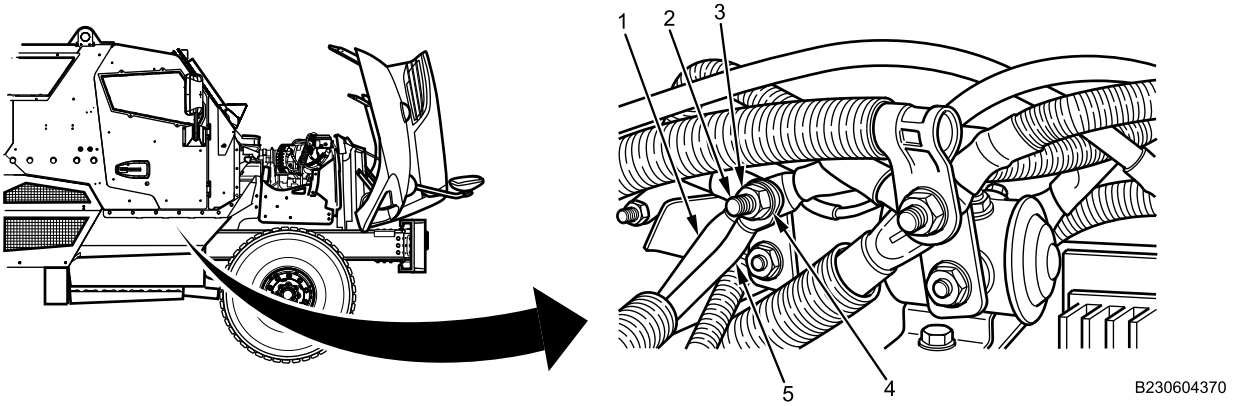

Figure 1. IP Feed Harness Connections at 12V Solenoid.

1. Remove nut (Figure 1, Item 3), lockwasher (Figure 1, Item 4), and two IP feed harness connectors (Figure 1, Item 1 and 5) from 12V solenoid terminal (Figure 1, Item 2). Discard lockwasher (Figure 1, Item 4).

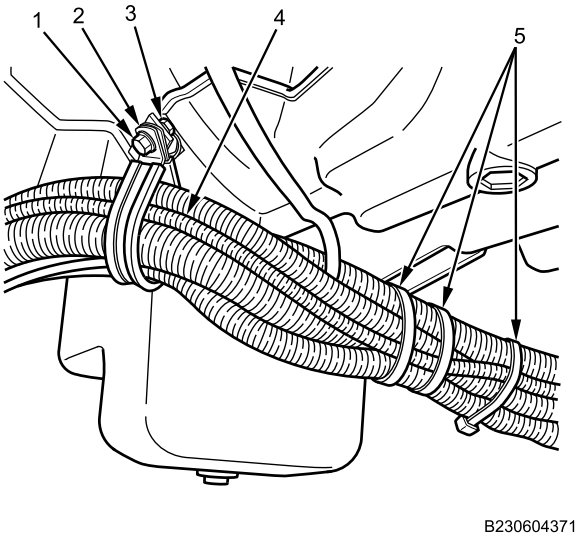

Figure 2. IP Feed Harness Removal at Transmission.

2. Remove nut (Figure 2, Item 3) and bolt (Figure 2, Item 1) from P-clamp (Figure 2, Item 2) at transmission housing.
3. Open P-clamp (Figure 2, Item 2) and remove IP feed harness (Figure 2, Item 4).
4. Remove and discard cable lock straps (Figure 2, Item 5) from IP feed harness (Figure 2, Item 4) as required to remove harness from bundle.

INSTRUMENT PANEL (IP) FEED HARNESS REMOVAL AND INSTALLATION - (CONTINUED)

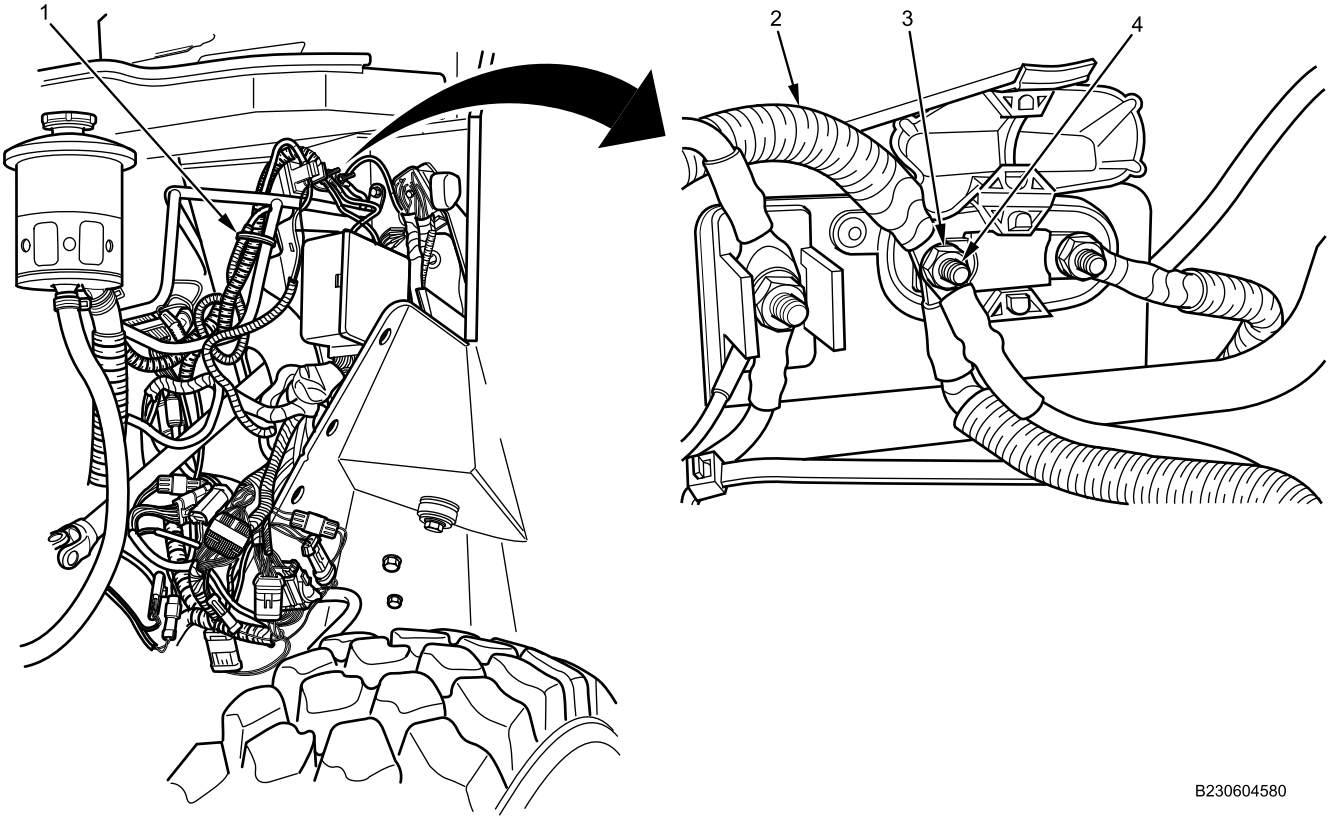

Figure 3. IP Feed Harness Connector Removal at MegaFuse Power Stud.

5. Remove locknut (Figure 3, Item 3) and IP feed harness connector (Figure 3, Item 2) from megafuse power stud (Figure 3, Item 4). Discard locknut (Figure 3, Item 3).
6. Remove and discard cable lock straps (Figure 3, Item 1) from IP feed harness (Figure 3, Item 2) as required to remove harness from bundle.
7. Remove IP feed harness (Figure 3, Item 2) from vehicle.

END OF TASK

INSTRUMENT PANEL (IP) FEED HARNESS REMOVAL AND INSTALLATION - (CONTINUED)

INSTALLATION

WARNING

Dielectric grease is harmful to skin and eyes. If grease contacts eyes, rinse thoroughly and contact physician if irritation persists. If skin is contacted, wash thoroughly with soap and water. Failure to comply may result in serious injury to personnel.

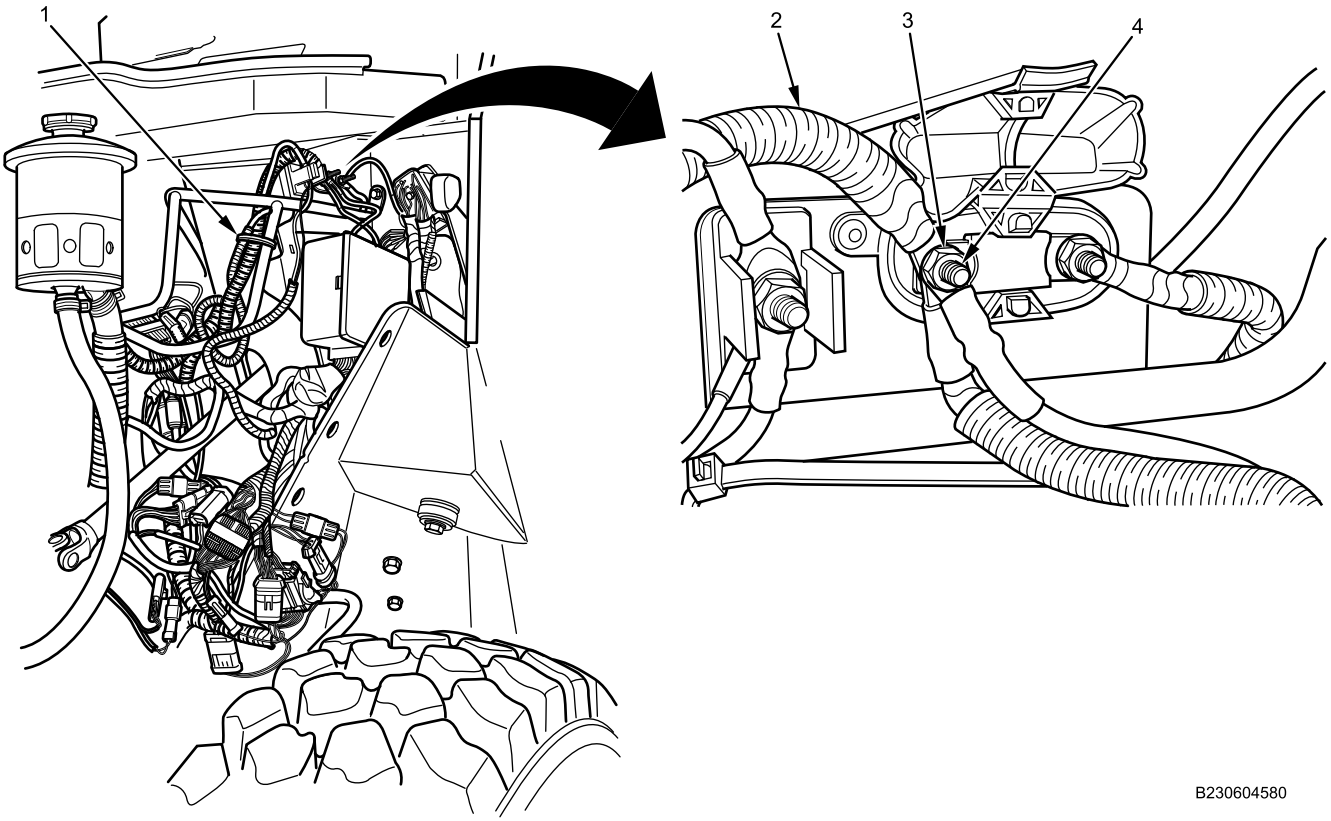

Figure 4. IP Feed Harness Connector Installation at MegaFuse Power Stud.

1. Apply dielectric grease to all harness connector ends.
2. Install IP feed harness connector (Figure 4, Item 2) on megafuse power stud (Figure 4, Item 4) with new locknut (Figure 4, Item 3). Tighten locknut securely.
3. Install new cable lock straps (Figure 4, Item 1) on IP feed harness (Figure 4, Item 2) as required to secure harness to bundle.

INSTRUMENT PANEL (IP) FEED HARNESS REMOVAL AND INSTALLATION - (CONTINUED)

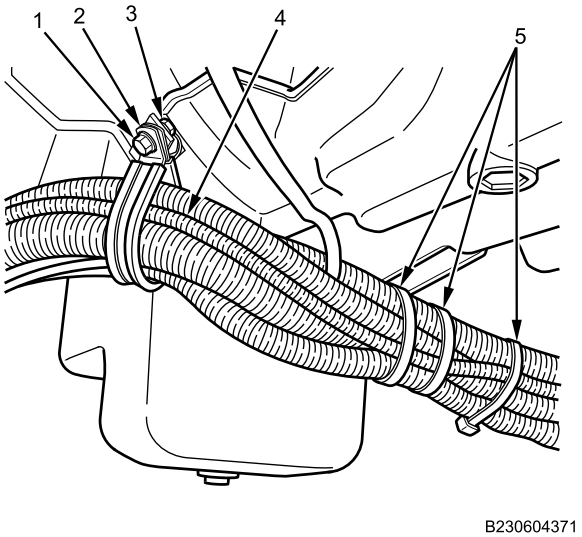

Figure 5. IP Feed Harness Installation.

4. Install IP feed harness (Figure 5, Item 4) in P-clamp (Figure 5, Item 2).

NOTE

Vehicle may have multiple P-clamps.

5. Install P-clamp (Figure 5, Item 2) on transmission housing with bolt (Figure 5, Item 1) and nut (Figure 5, Item 3). Tighten nut securely.
6. Install new cable lock straps (Figure 5, Item 5) on IP feed harness (Figure 5, Item 4) as noted in removal.

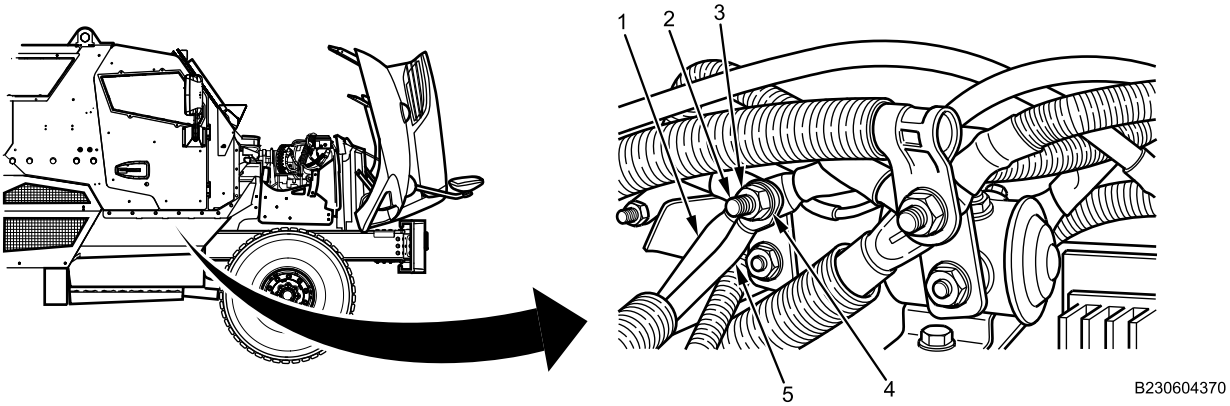

Figure 6. IP Feed Harness Connector Installation at 12V Solenoid.

7. Connect IP feed harness connectors (Figure 6, Item 1 and 5) to 12V solenoid terminal (Figure 6, Item 2) with new lockwasher (Figure 6, Item 4) and nut (Figure 6, Item 3). Tighten nut securely.

END OF TASK

FOLLOW-ON MAINTENANCE

1. Connect batteries (WP 0404).

INSTRUMENT PANEL (IP) FEED HARNESS REMOVAL AND INSTALLATION - (CONTINUED)

2. Turn MAIN POWER switch on (TM 9-2355-106-10).
3. Start engine (TM 9-2355-106-10).
4. Turn engine off (TM 9-2355-106-10).
5. Turn MAIN POWER switch off (TM 9-2355-106-10).
6. Install left side engine armor plate (WP 0597).
7. Install air cleaner assembly (WP 0257).
8. Install belly armor (WP 0606).
9. Remove wheel chocks (TM 9-2355-106-10).

END OF TASK

END OF WORK PACKAGE

FIELD MAINTENANCE

ENGINE CONTROL MODULE (ECM) AND THE TRANSMISSION CONTROL MODULE (TCM) CLEAN POWER FUSE REMOVAL AND INSTALLATION

INITIAL SETUP:

Tools and Special Tools
General Mechanic's Tool Kit (GMTK) (WP 0795, Item 37)

Materials/Parts
Grease (WP 0794, Item 22)
Wire tags (WP 0794, Item 33)
Goggles, industrial (WP 0794, Item 20)
Faceshield, industrial (WP 0794, Item 16)

References
TM 9-2355-106-10
TM 9-2355-106-23P
WP 0786
WP 0782

Equipment Condition
Parking brake set (TM 9-2355-106-10)
Transmission set in NEUTRAL (N) (TM 9-2355-106-10)
Engine off (TM 9-2355-106-10)
MAIN POWER switch off (TM 9-2355-106-10)
Wheels chocked (TM 9-2355-106-10)
Battery box door opened (TM 9-2355-106-10)

WARNING

Use extreme caution when testing or working on or around electrical circuits. Always assume that electrical circuits are live. Electrical shock can occur upon contact with voltage high enough to cause current flow through muscles or nerves. On Direct Current (DC) systems, generally 1 milliamp of current can be felt, 5 milliamps can cause severe pain, 15 milliamps can cause loss of muscle control, and 70 milliamps can be fatal. Wear protective clothing; ensure skin, clothing, and surrounding areas are dry; do not wear jewelry; and touch only the insulated, nonmetallic parts of electrical components and testing equipment. To prevent electrical arcing, avoid shorting electrical test probes and jumper wires. Electrical arcing can cause bright flashes of light, capable of causing temporary blindness. If electrical injury occurs, immediately shut off power supply and seek medical assistance. Failure to comply may result in serious injury or death to personnel.

Wear protective eye goggles, face shield, and long sleeves when working on or near batteries. Batteries contain corrosive acid and can produce explosive gases. Batteries supply electrical current that can cause burns and electrical shock. Always check electrolyte level with engine off. Avoid leaning over or onto battery. Do not wear jewelry and do not smoke or have open flame or spark near battery. Do not allow tools to contact battery box or battery terminals. Failure to comply may result in damage to equipment and serious injury or death to personnel.

Cycle ignition switch once before performing this procedure to remove any residual electrical charge. Failure to comply may result in serious injury or death to personnel.

ENGINE CONTROL MODULE (ECM) AND THE TRANSMISSION CONTROL MODULE (TCM) CLEAN POWER FUSE REMOVAL AND INSTALLATION - (CONTINUED)

NOTE

Label all cables and connectors before fuse removal to ensure correct installation.

The clean-power connector provides fused, direct positive connections from the batteries to the ECM and TCM. The ECM uses a 40A fuse. The TCM uses a 10A fuse.

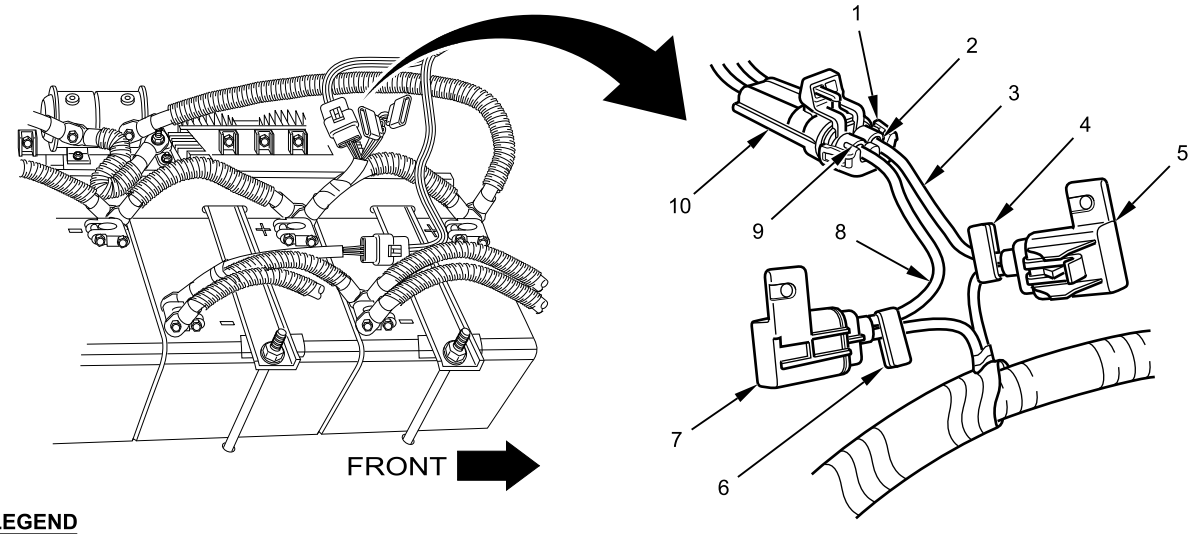

LEGEND

1 CLEAN-POWER CABLE HARNESS CONNECTOR
2 TCM FEED WIRE
3 WIRE WITH N92A MARKING
4 LABEL WITH TRANS ECU FEED FUSE CONN MARKING
5 CONNECTOR CAP FOR TCM 10A FUSE HOLDER
6 LABEL WITH ENGINE ECM FEED FUSE CONN MARKING
7 CONNECTOR CAP FOR ECM 40A FUSE HOLDER
8 WIRE WITH N97AA MARKING
9 ECM FEED WIRE
10 CLEAN-POWER HARNESS CONNECTOR

B230610016

Figure 1. Fuse Holder Identification.

ENGINE CONTROL MODULE (ECM) AND THE TRANSMISSION CONTROL MODULE (TCM) CLEAN POWER FUSE REMOVAL AND INSTALLATION - (CONTINUED)

REMOVAL

1. Remove fuse holder connector caps (Figure 2, Item 2 and 4) from fuse holders (Figure 2, Item 1 and 3).

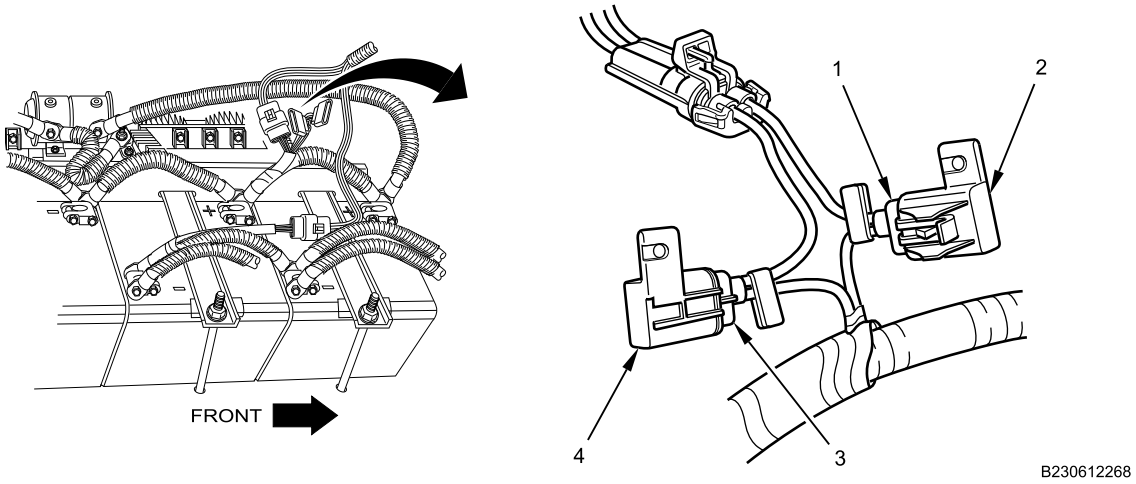

Figure 2. Fuse Caps.

2. Remove 40A ECM fuse (Figure 3, Item 4) from ECM fuse holder (Figure 3, Item 3).

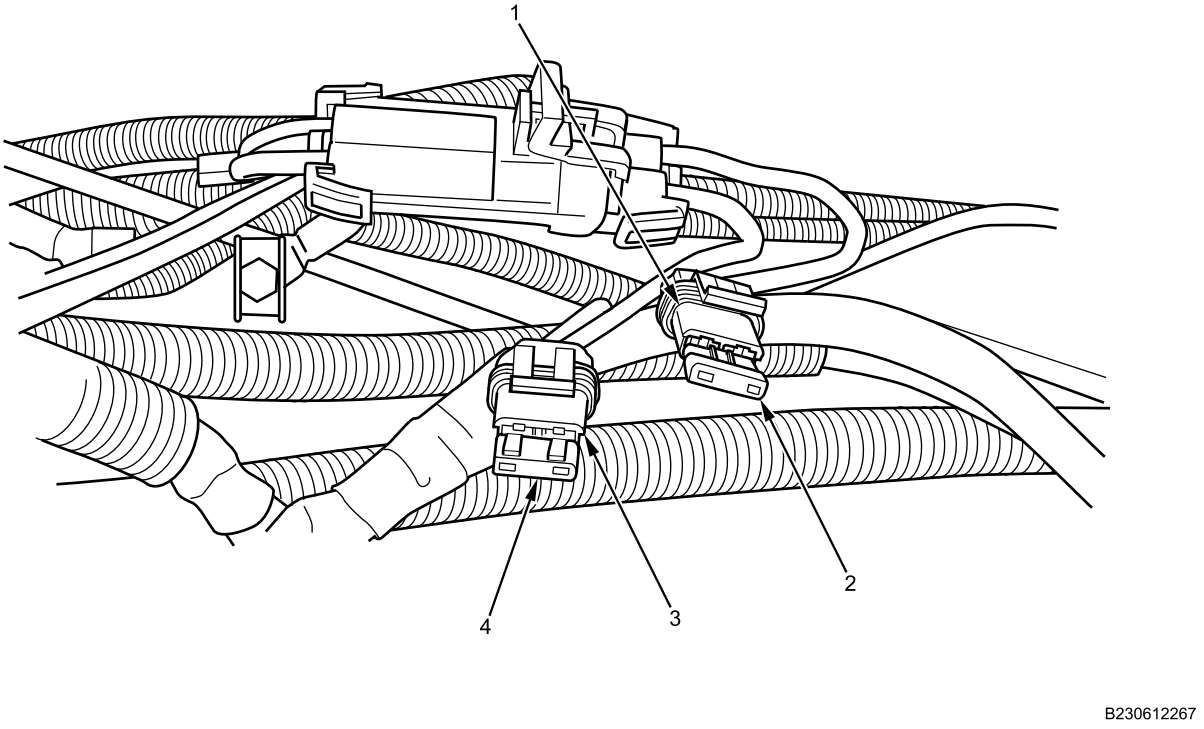

Figure 3. Fuse Removal.

3. Remove 10A TCM fuse (Figure 3, Item 2) from TCM fuse holder (Figure 3, Item 1).

END OF TASK

ENGINE CONTROL MODULE (ECM) AND THE TRANSMISSION CONTROL MODULE (TCM) CLEAN POWER FUSE REMOVAL AND INSTALLATION - (CONTINUED)

TEST AND INSPECTION

NOTE

Multimeter will read OL for a faulty fuse.

1. Using multimeter, measure resistance between ECM fuse terminals (Figure 4, Item 1 and 2). If multimeter reads OL, replace fuse.

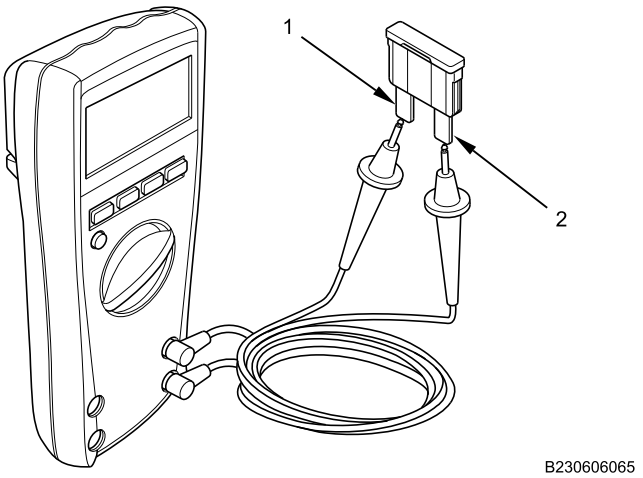

Figure 4. Testing for Faulty Fuse

2. Repeat step 1 for TCM fuse.

END OF TASK

INSTALLATION

WARNING

Dielectric grease is harmful to skin and eyes. If grease contacts eyes, rinse thoroughly and contact physician if irritation persists. If skin is contacted, wash thoroughly with soap and water. Failure to comply may result in serious injury to personnel.

Do not use a circuit breaker, fuse, fusible link, or relay with higher amperage rating than listed for a particular application. Using higher amperage will overheat the electrical circuit, causing melted components and possible fire. Failure to comply may result in damage to equipment and serious injury or death to personnel.

CAUTION

Pay close attention to cable and connector labels. Wire colors may not match. Incorrect installation may result in damage to electrical system.

ENGINE CONTROL MODULE (ECM) AND THE TRANSMISSION CONTROL MODULE (TCM) CLEAN POWER FUSE REMOVAL AND INSTALLATION - (CONTINUED)

NOTE

Apply dielectric grease to all electrical connections before installation.

1. Install 10A TCM fuse (Figure 5, Item 2) in TCM fuse holder (Figure 5, Item 1).

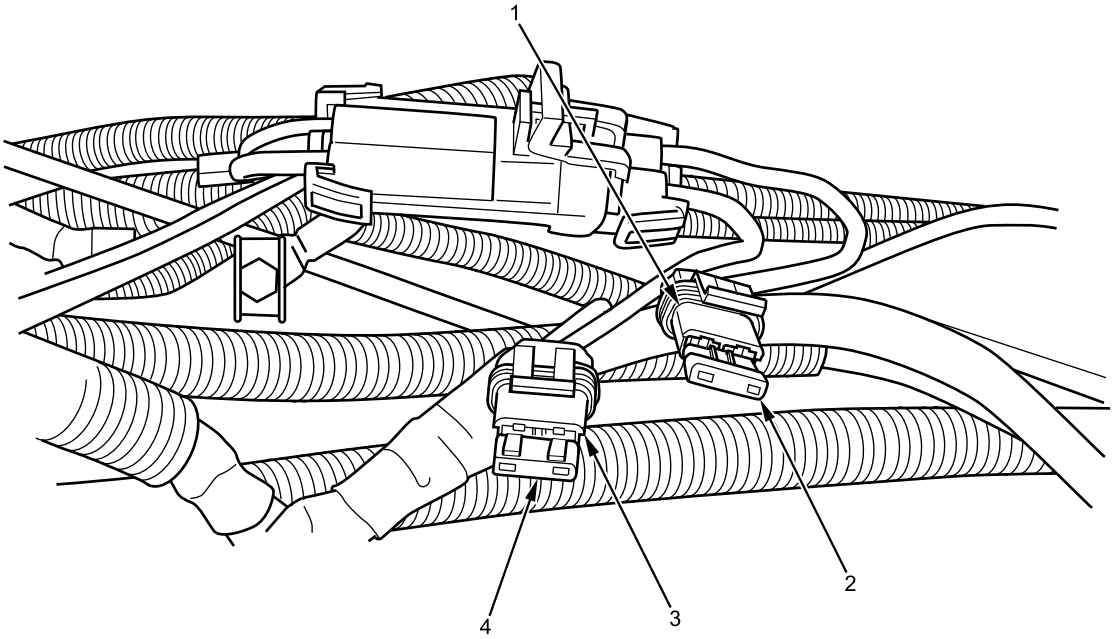

B230612267

Figure 5. Fuse Installation.

2. Install 40A ECM fuse (Figure 5, Item 4) in ECM fuse holder (Figure 5, Item 3).

ENGINE CONTROL MODULE (ECM) AND THE TRANSMISSION CONTROL MODULE (TCM) CLEAN POWER FUSE REMOVAL AND INSTALLATION - (CONTINUED)

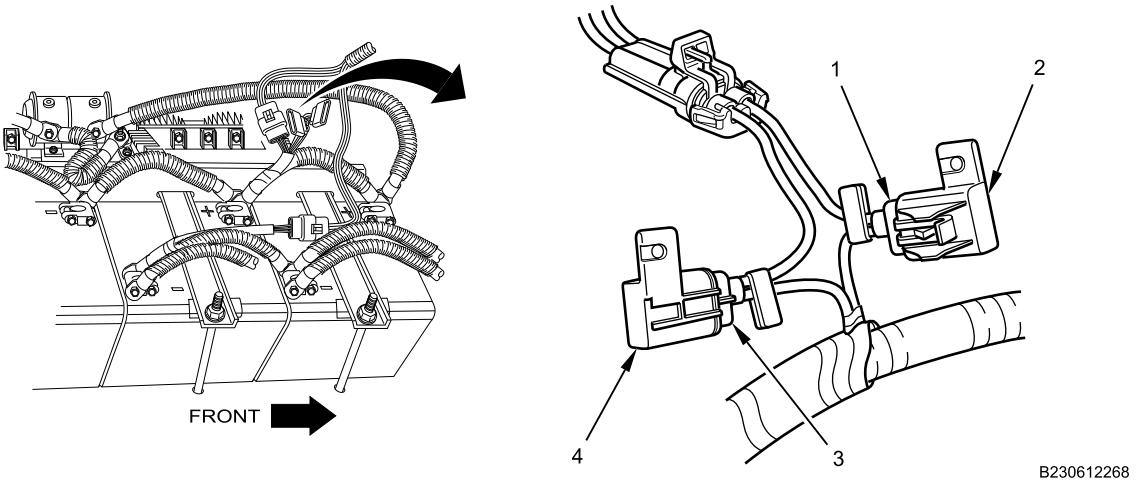

Figure 6. Fuse Caps.

3. Install fuse holder connector caps (Figure 6, Item 2 and 4) on fuse holder connectors (Figure 6, Item 1 and 3) as noted in removal.

END OF TASK

FOLLOW-ON MAINTENANCE

1. Close battery box door (TM 9-2355-106-10)
2. Turn MAIN POWER switch on (TM 9-2355-106-10).
3. Start engine (TM 9-2355-106-10).
4. Turn engine off (TM 9-2355-106-10).
5. Turn MAIN POWER switch off (TM 9-2355-106-10).
6. Remove wheel chocks (TM 9-2355-106-10).

END OF TASK

END OF WORK PACKAGE

FIELD MAINTENANCE

STARTER MOTOR-TO-BATTERY FEED CABLE REMOVAL AND INSTALLATION

INITIAL SETUP:

Tools and Special Tools
General Mechanic's Tool Kit (GMTK) (WP 0795, Item 37)

Materials/Parts
Grease (WP 0794, Item 22)
Cable lock strap - (3) (WP 0796, Item 120)
Cable lock strap - (3) (WP 0796, Item 124)
Cable lock strap (WP 0796, Item 104)
Lockwasher (WP 0796, Item 22)

References
TM 9-2355-106-10
TM 9-2355-106-23P
WP 0786
WP 0782

Equipment Condition
Parking brake set (TM 9-2355-106-10)
Transmission set in NEUTRAL (N) (TM 9-2355-106-10)
Engine off (TM 9-2355-106-10)
MAIN POWER switch off (TM 9-2355-106-10)
Wheels chocked (TM 9-2355-106-10)
Battery cables disconnected (WP 0404)
Belly armor removed (WP 0606)

WARNING

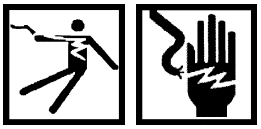

Use extreme caution when testing or working on or around electrical circuits. Always assume that electrical circuits are live. Electrical shock can occur upon contact with voltage high enough to cause current flow through muscles or nerves. On Direct Current (DC) systems, generally 1 milliamp of current can be felt, 5 milliamps can cause severe pain, 15 milliamps can cause loss of muscle control, and 70 milliamps can be fatal. Wear protective clothing; ensure skin, clothing, and surrounding areas are dry; do not wear jewelry; and touch only the insulated, nonmetallic parts of electrical components and testing equipment. To prevent electrical arcing, avoid shorting electrical test probes and jumper wires. Electrical arcing can cause bright flashes of light, capable of causing temporary blindness. If electrical injury occurs, immediately shut off power supply and seek medical assistance. Failure to comply may result in serious injury or death to personnel.

NOTE

Remove cable lock straps as necessary to perform procedure. Note position and size of cable lock straps to aid installation.

STARTER MOTOR-TO-BATTERY FEED CABLE REMOVAL AND INSTALLATION - (CONTINUED)

REMOVAL

1. Remove nut (Figure 1, Item 1), lockwasher, and feed cable (Figure 1, Item 2) from starter solenoid (Figure 1, Item 3). Discard lockwasher.

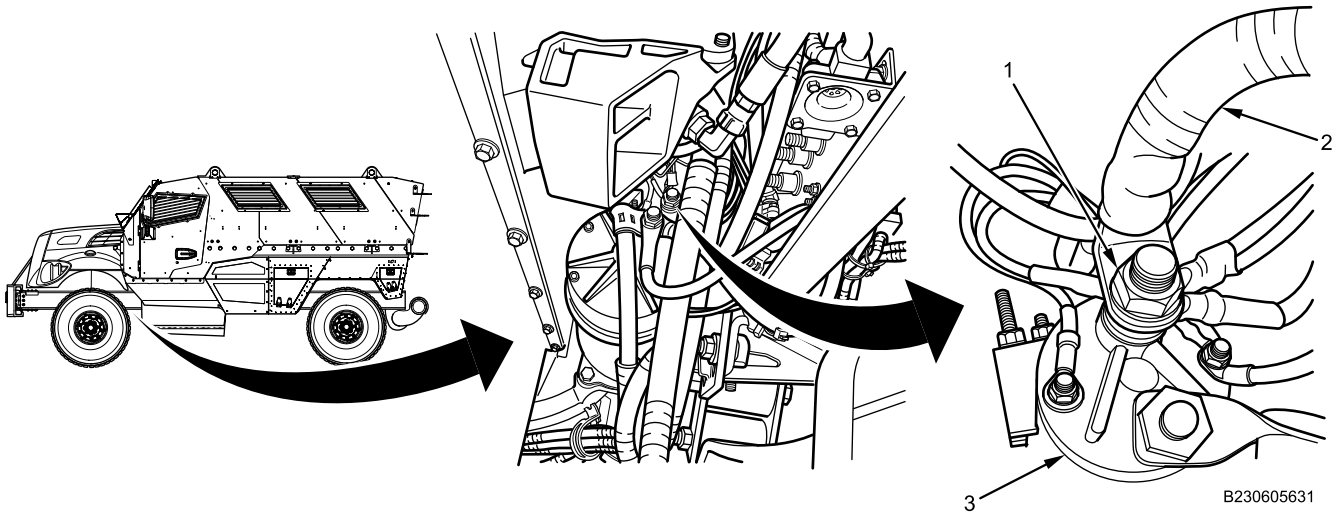

Figure 1. Solenoid Wiring.

END OF TASK

INSTALLATION

WARNING

Dielectric grease is harmful to skin and eyes. If grease contacts eyes, rinse thoroughly and contact physician if irritation persists. If skin is contacted, wash thoroughly with soap and water. Failure to comply may result in serious injury to personnel.

1. Apply dielectric grease to all electrical connections.

STARTER MOTOR-TO-BATTERY FEED CABLE REMOVAL AND INSTALLATION - (CONTINUED)

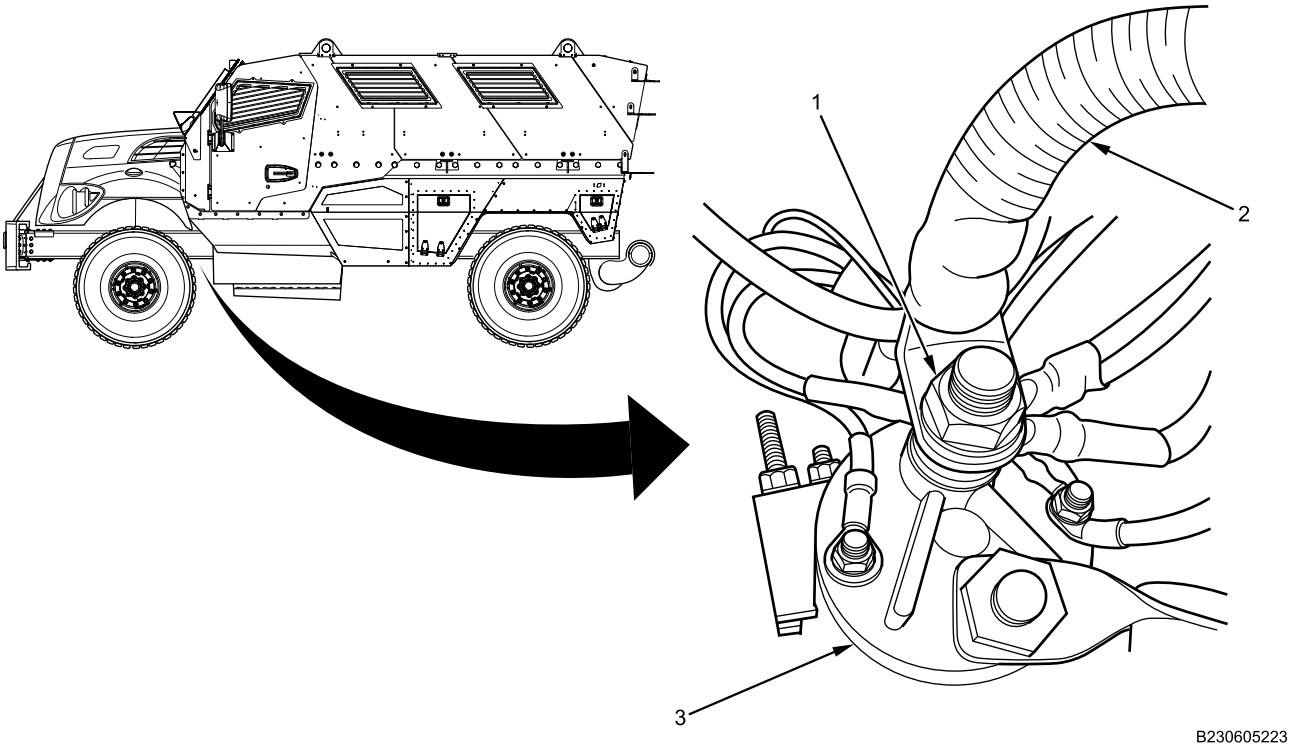

Figure 2. Solenoid Feed Cable Installation.

2. Install feed cable (Figure 2, Item 2), new lockwasher, and nut (Figure 2, Item 1) on solenoid (Figure 2, Item 3). Tighten nut securely.
3. Install all cable lock straps and tighten securely.

END OF TASK

FOLLOW-ON MAINTENANCE

1. Connect battery cables (WP 0404).
2. Turn MAIN POWER switch on (TM 9-2355-106-10).
3. Start engine (TM 9-2355-106-10).
4. Turn engine off (TM 9-2355-106-10).
5. Turn MAIN POWER switch off (TM 9-2355-106-10).
6. Install belly armor (WP 0606).
7. Remove wheel chocks (TM 9-2355-106-10).

END OF TASK

END OF WORK PACKAGE

FIELD MAINTENANCE

STARTER MOTOR-TO-BATTERY GROUND CABLE REMOVAL AND INSTALLATION

INITIAL SETUP:

Tools and Special Tools
General Mechanic's Tool Kit (GMTK) (WP 0795, Item 37)

Materials/Parts
Grease (WP 0794, Item 22)
Cable lock strap - (3) (WP 0796, Item 120)
Cable lock strap - (3) (WP 0796, Item 124)
Lockwasher (WP 0796, Item 22)

References
TM 9-2355-106-10
TM 9-2355-106-23P
WP 0786
WP 0782

Equipment Condition
Parking brake set (TM 9-2355-106-10)
Transmission set in NEUTRAL (N) (TM 9-2355-106-10)
Engine off (TM 9-2355-106-10)
MAIN POWER switch off (TM 9-2355-106-10)
Wheels chocked (TM 9-2355-106-10)
Battery cables disconnected (WP 0404)
Belly armor removed (WP 0606)

WARNING

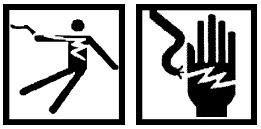

Use extreme caution when testing or working on or around electrical circuits. Always assume that electrical circuits are live. Electrical shock can occur upon contact with voltage high enough to cause current flow through muscles or nerves. On Direct Current (DC) systems, generally 1 milliamp of current can be felt, 5 milliamps can cause severe pain, 15 milliamps can cause loss of muscle control, and 70 milliamps can be fatal. Wear protective clothing; ensure skin, clothing, and surrounding areas are dry; do not wear jewelry; and touch only the insulated, nonmetallic parts of electrical components and testing equipment. To prevent electrical arcing, avoid shorting electrical test probes and jumper wires. Electrical arcing can cause bright flashes of light, capable of causing temporary blindness. If electrical injury occurs, immediately shut off power supply and seek medical assistance. Failure to comply may result in serious injury or death to personnel.

NOTE

Remove cable lock straps as necessary to perform procedure. Note position and size of cable lock straps to aid installation.

STARTER MOTOR-TO-BATTERY GROUND CABLE REMOVAL AND INSTALLATION - (CONTINUED)

REMOVAL

1. Remove nut (Figure 1, Item 1), lockwasher, and ground cable (Figure 1, Item 2) from starter. Discard lockwasher.

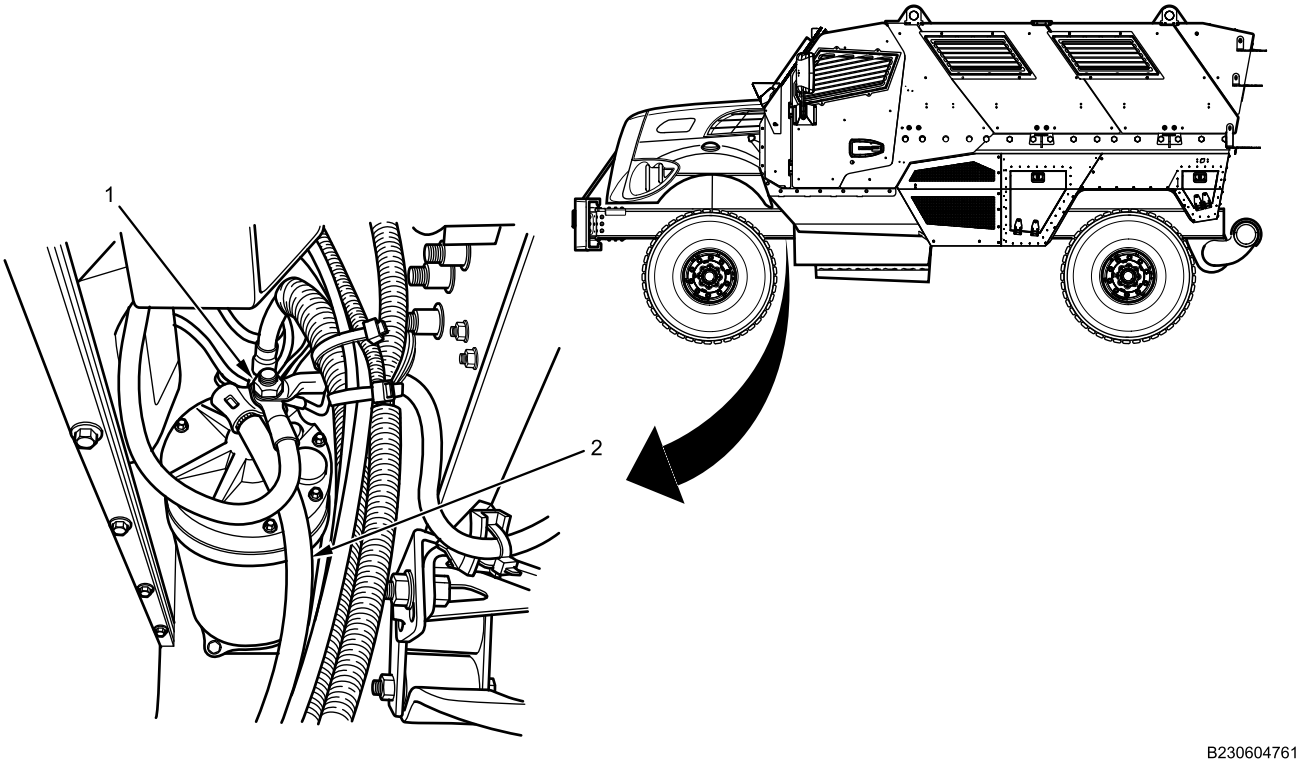

Figure 1. Starter Ground Cable Removal.

END OF TASK

STARTER MOTOR-TO-BATTERY GROUND CABLE REMOVAL AND INSTALLATION - (CONTINUED)

INSTALLATION

WARNING

Dielectric grease is harmful to skin and eyes. If grease contacts eyes, rinse thoroughly and contact physician if irritation persists. If skin is contacted, wash thoroughly with soap and water. Failure to comply may result in serious injury to personnel.

1. Apply dielectric grease to all electrical connections.

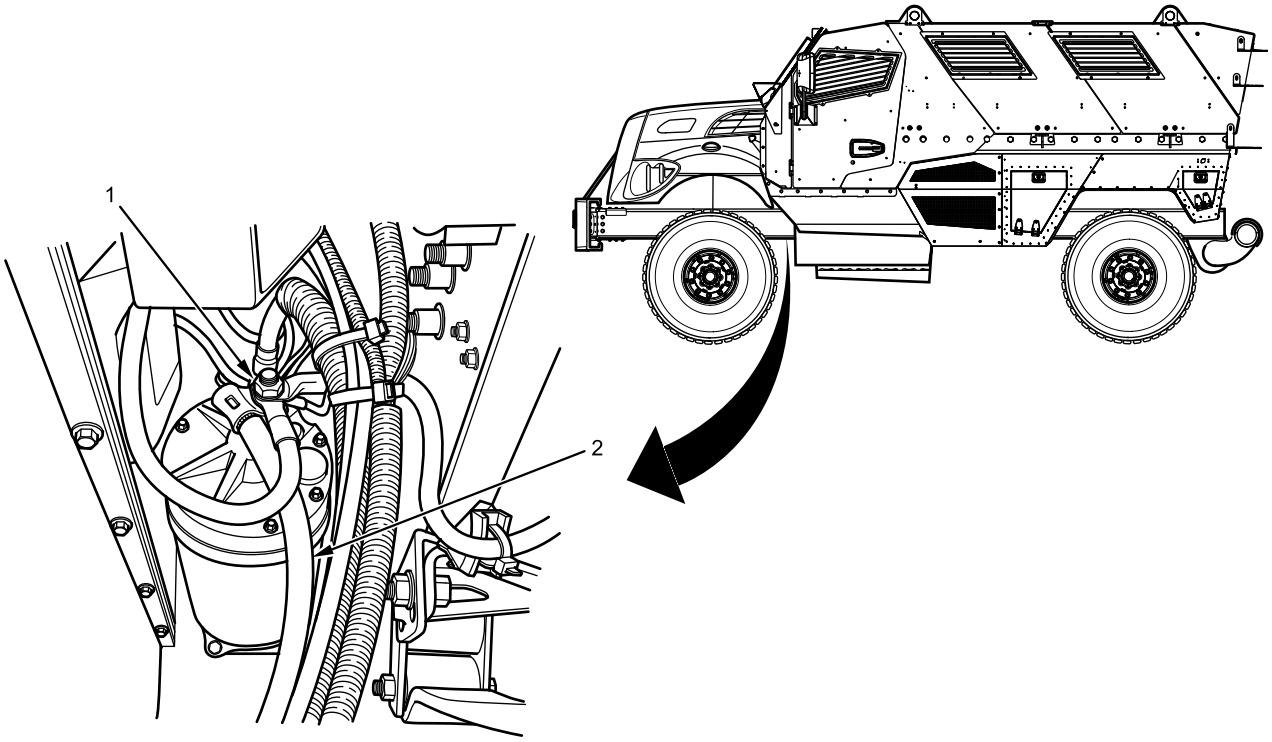

Figure 2. Starter Ground Cable Installation.

2. Install ground cable (Figure 2, Item 2), new lockwasher, and nut (Figure 2, Item 1) on starter. Tighten nut securely.
3. Install all cable lock straps and tighten securely.

END OF TASK

STARTER MOTOR-TO-BATTERY GROUND CABLE REMOVAL AND INSTALLATION - (CONTINUED)

FOLLOW-ON MAINTENANCE

1. Connect battery cables (WP 0404).
2. Turn MAIN POWER switch on (TM 9-2355-106-10).
3. Start engine (TM 9-2355-106-10).
4. Turn engine off (TM 9-2355-106-10).
5. Turn MAIN POWER switch off (TM 9-2355-106-10).
6. Install belly armor (WP 0606).
7. Remove wheel chocks (TM 9-2355-106-10).

END OF TASK

END OF WORK PACKAGE

FIELD MAINTENANCE

WINCH BATTERY CABLE JUNCTION BLOCK AND BRACKET SUPPORT REMOVAL AND INSTALLATION

INITIAL SETUP:

Tools and Special Tools
General Mechanic's Tool Kit (GMTK) (WP 0795, Item 37)

Materials/Parts
Gloves (WP 0794, Item 18)
Compound (WP 0794, Item 13)
Grease (WP 0794, Item 22)
Goggles, industrial (WP 0794, Item 20)
Faceshield, industrial (WP 0794, Item 16)
Lockwasher - (2) (WP 0796, Item 24)
Cable lock strap - (2) (WP 0796, Item 124)
Rivets - (4) (WP 0796, Item 156)

References
TM 9-2355-106-10
TM 9-2355-106-23P
WP 0786
WP 0782

Equipment Condition
Parking brake set (TM 9-2355-106-10)
Transmission set in NEUTRAL (N) (TM 9-2355-106-10)
Engine off (TM 9-2355-106-10)
MAIN POWER switch off (TM 9-2355-106-10)
Wheels chocked (TM 9-2355-106-10)
Battery cables disconnected (WP 0404)

WARNING

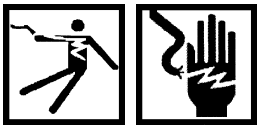

Use extreme caution when testing or working on or around electrical circuits. Always assume that electrical circuits are live. Electrical shock can occur upon contact with voltage high enough to cause current flow through muscles or nerves. On Direct Current (DC) systems, generally 1 milliamp of current can be felt, 5 milliamps can cause severe pain, 15 milliamps can cause loss of muscle control, and 70 milliamps can be fatal. Wear protective clothing; ensure skin, clothing, and surrounding areas are dry; do not wear jewelry; and touch only the insulated, nonmetallic parts of electrical components and testing equipment. To prevent electrical arcing, avoid shorting electrical test probes and jumper wires. Electrical arcing can cause bright flashes of light, capable of causing temporary blindness. If electrical injury occurs, immediately shut off power supply and seek medical assistance. Failure to comply may result in serious injury or death to personnel.

WINCH BATTERY CABLE JUNCTION BLOCK AND BRACKET SUPPORT REMOVAL AND INSTALLATION - (CONTINUED)

REMOVAL

1. Remove and discard two cable lock straps (Figure 1, Item 1).

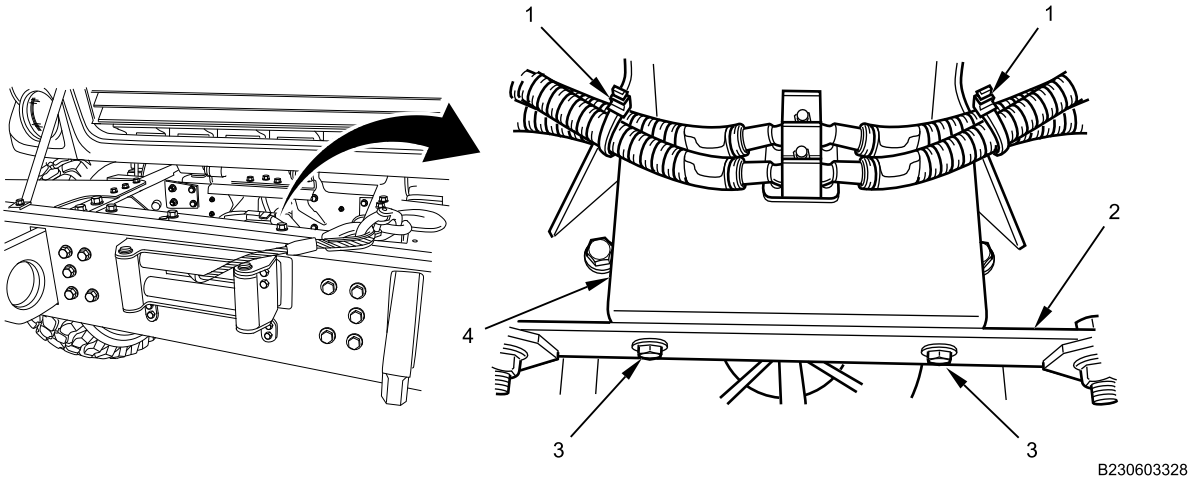

Figure 1. Battery Cable Junction Block Support.

2. Remove nut (Figure 2, Item 10), lockwasher (Figure 2, Item 8), BLACK winch assembly ground cable (Figure 2, Item 7), washer (Figure 2, Item 6), and BLACK battery ground cable (Figure 2, Item 11) from cable junction block (Figure 2, Item 9). Discard lockwasher.

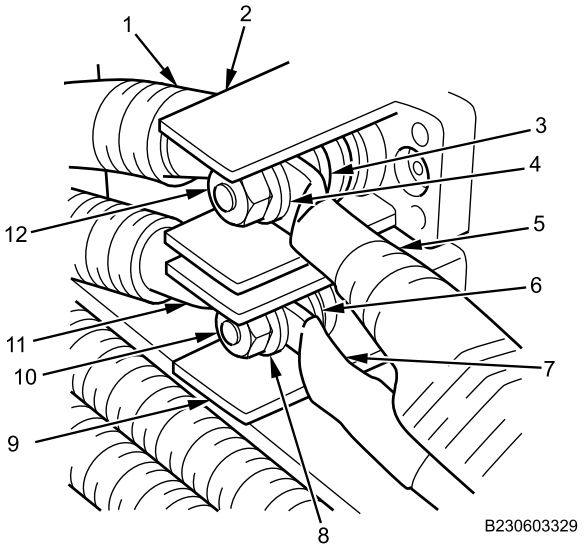

Figure 2. Battery Cables Junction Block Assembly.

3. Remove nut (Figure 2, Item 12), lockwasher (Figure 2, Item 4), RED winch assembly power cable (Figure 2, Item 5), washer (Figure 2, Item 3), and RED battery power cable (Figure 2, Item 1) from cable junction block (Figure 2, Item 2). Discard lockwasher.
4. Remove two bolts (Figure 1, Item 3) and battery cable junction block support assembly (Figure 1, Item 4) from radiator support small crossmember (Figure 1, Item 2).

END OF TASK

WINCH BATTERY CABLE JUNCTION BLOCK AND BRACKET SUPPORT REMOVAL AND INSTALLATION - (CONTINUED)

DISASSEMBLY

1. Remove four rivets (Figure 3, Item 3) and two junction blocks (Figure 3, Item 2) from battery cable junction block support (Figure 3, Item 1). Discard rivets.

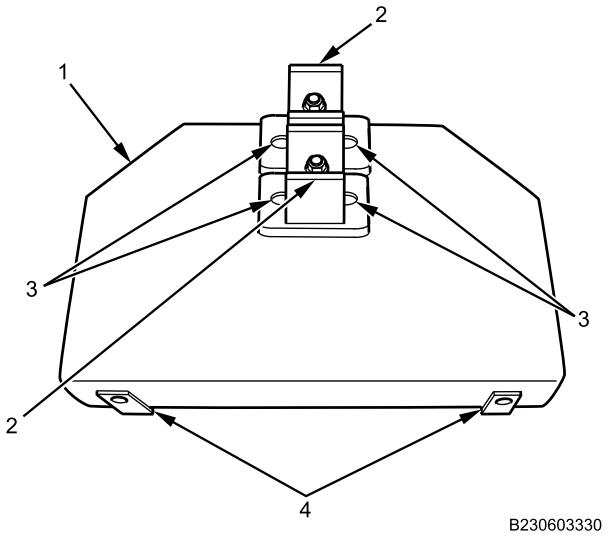

Figure 3. Junction Block.

2. Remove two J-clips (Figure 3, Item 4) from battery cable junction block support (Figure 3, Item 1).

END OF TASK

ASSEMBLY

1. Install two J-clips (Figure 3, Item 4) on battery cable junction block support (Figure 3, Item 1).
2. Position two junction blocks (Figure 3, Item 2) on battery cable junction block support (Figure 3, Item 1).
3. Install four new rivets (Figure 3, Item 3) on two junction blocks (Figure 3, Item 2).

END OF TASK

WINCH BATTERY CABLE JUNCTION BLOCK AND BRACKET SUPPORT REMOVAL AND INSTALLATION - (CONTINUED)

INSTALLATION

WARNING

Corrosion preventive compound is toxic. Use only in well-ventilated area. Do not get in eyes; wear chemical safety goggles and full-face shield when using. Avoid contact with skin and wear rubber or plastic, solvent-resistant gloves. In case of contact, remove contaminated clothing and immediately wash area with soap and water. If compound contacts eyes, flush eyes with large amounts of water for at least 15 minutes and get immediate medical attention. If swallowed, do not induce vomiting; contact a physician immediately. Failure to comply may result in serious injury or death to personnel.

1. Apply corrosion preventive compound on battery cable junction block support assembly bolt threads.

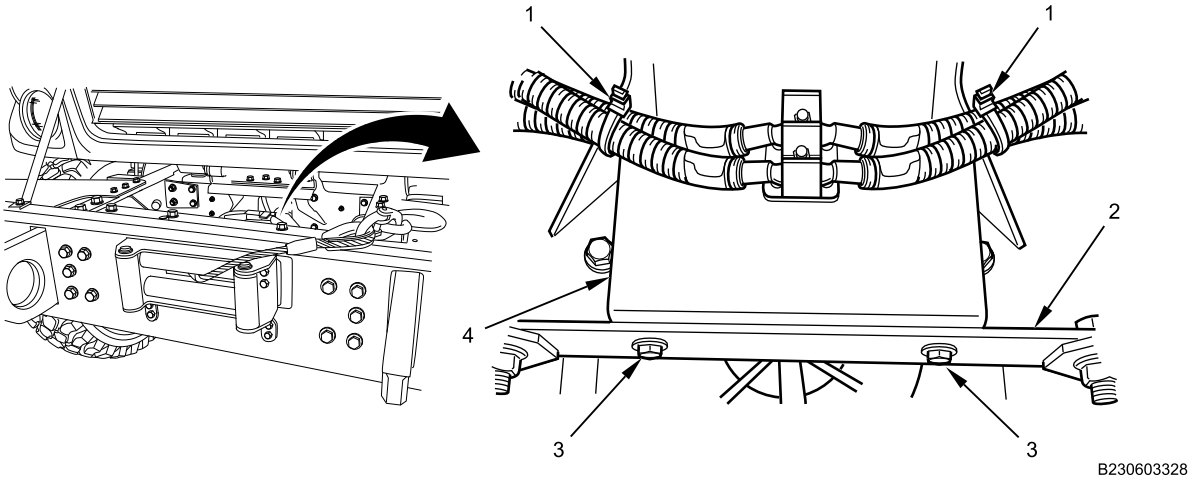

Figure 4. Battery Cable Junction Block Support.

2. Install battery cable junction block support assembly (Figure 4, Item 4) on radiator support small crossmember (Figure 4, Item 2) with two bolts (Figure 4, Item 3). Tighten bolts securely.

WARNING

Dielectric grease is harmful to skin and eyes. If grease contacts eyes, rinse thoroughly and contact physician if irritation persists. If skin is contacted, wash thoroughly with soap and water. Failure to comply may result in serious injury to personnel.

3. Apply dielectric grease to cable end connectors.

WINCH BATTERY CABLE JUNCTION BLOCK AND BRACKET SUPPORT REMOVAL AND INSTALLATION - (CONTINUED)

4. Install RED battery power cable (Figure 5, Item 1), washer (Figure 5, Item 3), RED winch assembly power cable (Figure 5, Item 5), and new lockwasher (Figure 5, Item 4) on cable junction block (Figure 5, Item 2) with nut (Figure 5, Item 12). Tighten nut securely.

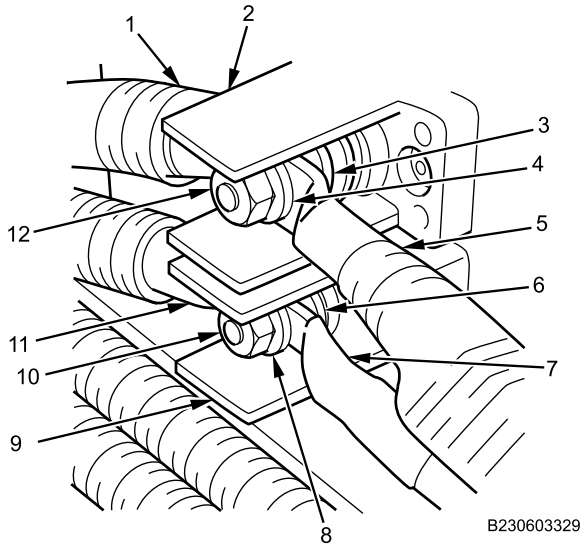

Figure 5. Battery Cables Junction Block Assembly.

5. Install BLACK battery ground cable (Figure 5, Item 11), washer (Figure 5, Item 6), BLACK winch assembly ground cable (Figure 5, Item 7), and new lockwasher (Figure 5, Item 8) on cable junction block (Figure 5, Item 9) with nut (Figure 5, Item 10). Tighten nut securely.
6. Install two new cable lock straps (Figure 4, Item 1).

END OF TASK

FOLLOW-ON MAINTENANCE

1. Connect battery cables (WP 0404).
2. Turn MAIN POWER switch on (TM 9-2355-106-10).
3. Verify winch operation (TM 9-2355-106-10).
4. Turn MAIN POWER switch off (TM 9-2355-106-10).
5. Remove wheel chocks (TM 9-2355-106-10).

END OF TASK

END OF WORK PACKAGE

FIELD MAINTENANCE

WINCH FEED CABLE REMOVAL AND INSTALLATION

INITIAL SETUP:

Tools and Special Tools
General Mechanic's Tool Kit (GMTK) (WP 0795, Item 37)

Materials/Parts
Lockwasher (WP 0796, Item 24)
Cable lock strap - (10) (WP 0796, Item 134)

References
TM 9-2355-106-10
TM 9-2355-106-23P
WP 0786
WP 0782

Equipment Condition
Parking brake set (TM 9-2355-106-10)
Transmission set in NEUTRAL (N) (TM 9-2355-106-10)
Engine off (TM 9-2355-106-10)
MAIN POWER switch off (TM 9-2355-106-10)
Wheels chocked (TM 9-2355-106-10)
Battery cables disconnected (WP 0404)

WARNING

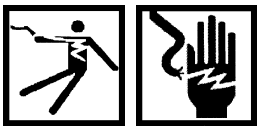

Use extreme caution when testing or working on or around electrical circuits. Always assume that electrical circuits are live. Electrical shock can occur upon contact with voltage high enough to cause current flow through muscles or nerves. On Direct Current (DC) systems, generally 1 milliamp of current can be felt, 5 milliamps can cause severe pain, 15 milliamps can cause loss of muscle control, and 70 milliamps can be fatal. Wear protective clothing; ensure skin, clothing, and surrounding areas are dry; do not wear jewelry; and touch only the insulated, nonmetallic parts of electrical components and testing equipment. To prevent electrical arcing, avoid shorting electrical test probes and jumper wires. Electrical arcing can cause bright flashes of light, capable of causing temporary blindness. If electrical injury occurs, immediately shut off power supply and seek medical assistance. Failure to comply may result in serious injury or death to personnel.

NOTE

Remove cable lock straps as necessary to perform procedure. Note position and size of cable lock straps to aid installation.

WINCH FEED CABLE REMOVAL AND INSTALLATION - (CONTINUED)

REMOVAL

NOTE

Winch megafuse and holder are located on bracket behind batteries, next to 12V and 24V battery disconnect switch solenoids.

1. Remove megafuse cover (Figure 1, Item 1) from megafuse holder (Figure 1, Item 4).

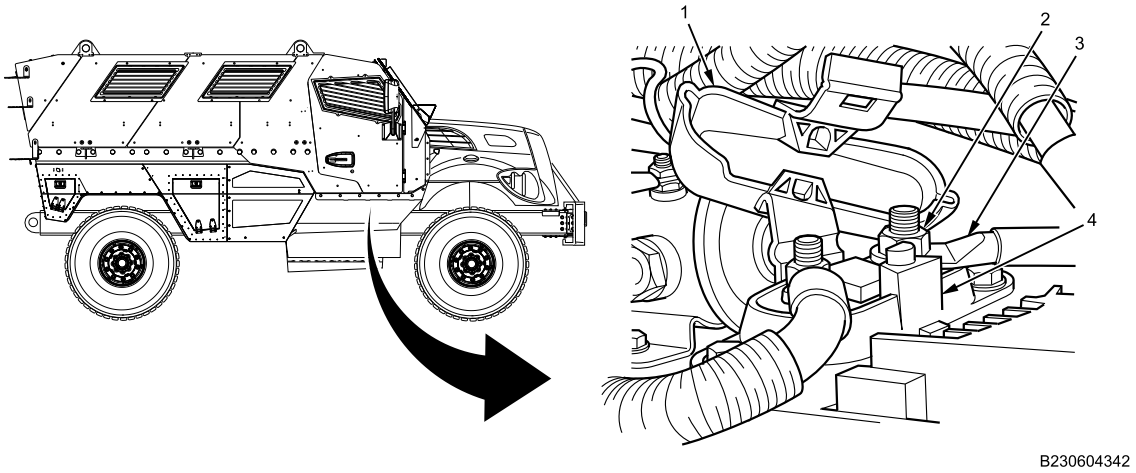

Figure 1. 300A Megafuse and Holder.

2. Remove nut (Figure 1, Item 2) and winch feed cable (Figure 1, Item 3) from megafuse holder (Figure 1, Item 4).
3. Remove nut (Figure 2, Item 6), lockwasher (Figure 2, Item 4), winch assembly RED cable (Figure 2, Item 5), flat washer (Figure 2, Item 3), and winch RED feed cable (Figure 2, Item 1) from junction block (Figure 2, Item 2). Discard lockwasher (Figure 2, Item 4).

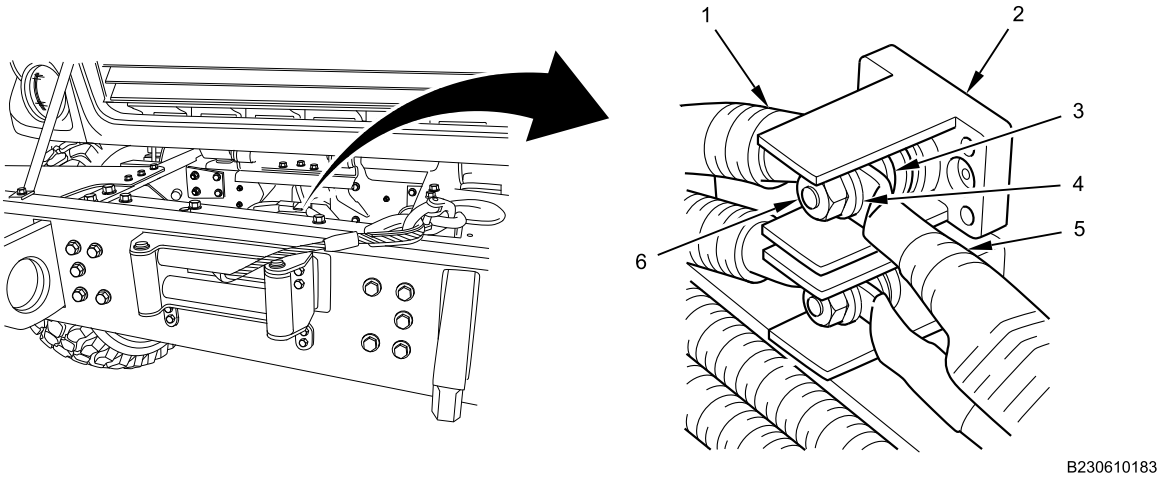

Figure 2. Junction Block.

WINCH FEED CABLE REMOVAL AND INSTALLATION - (CONTINUED)

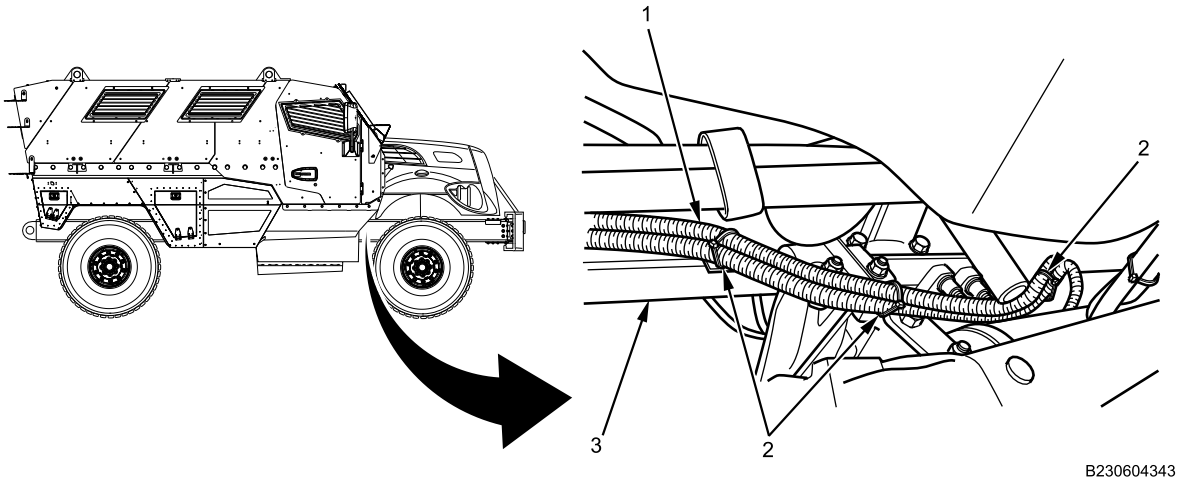

Figure 3. Winch Cables Along Right Side Frame Rail.

4. Remove and discard cable lock straps (Figure 3, Item 2) along inner right side frame rail (Figure 3, Item 3). Remove winch feed cable (Figure 3, Item 1).

END OF TASK

INSTALLATION

1. Install winch RED feed cable (Figure 4, Item 1), flat washer (Figure 4, Item 3), winch assembly RED cable (Figure 4, Item 5), new lockwasher (Figure 4, Item 4), and nut (Figure 4, Item 6) on junction block (Figure 4, Item 2). Tighten nut securely.

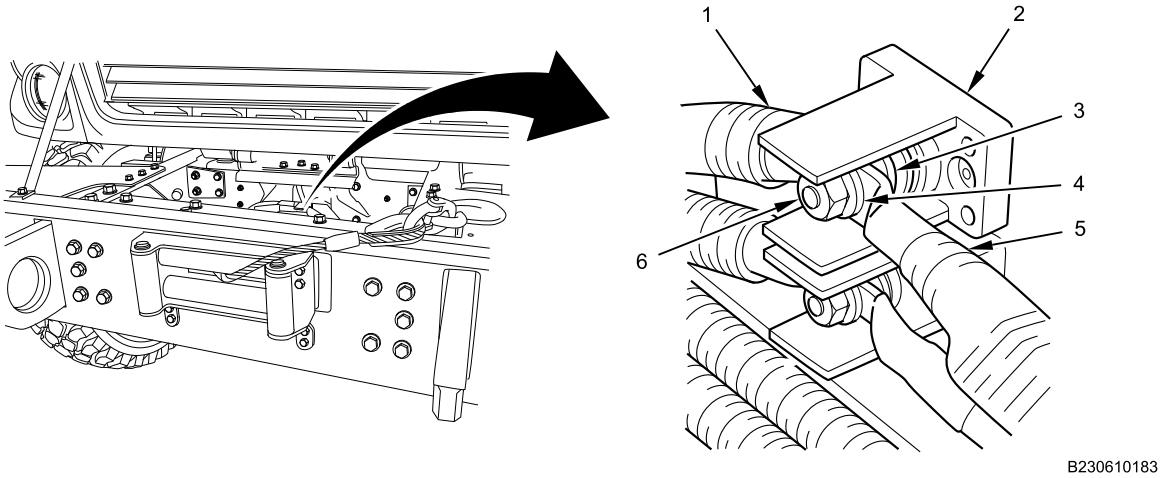

Figure 4. Junction Block.

WINCH FEED CABLE REMOVAL AND INSTALLATION - (CONTINUED)

2. Install winch RED feed cable (Figure 5, Item 3) and nut (Figure 5, Item 2) on megafuse holder (Figure 5, Item 4). Tighten nut securely.

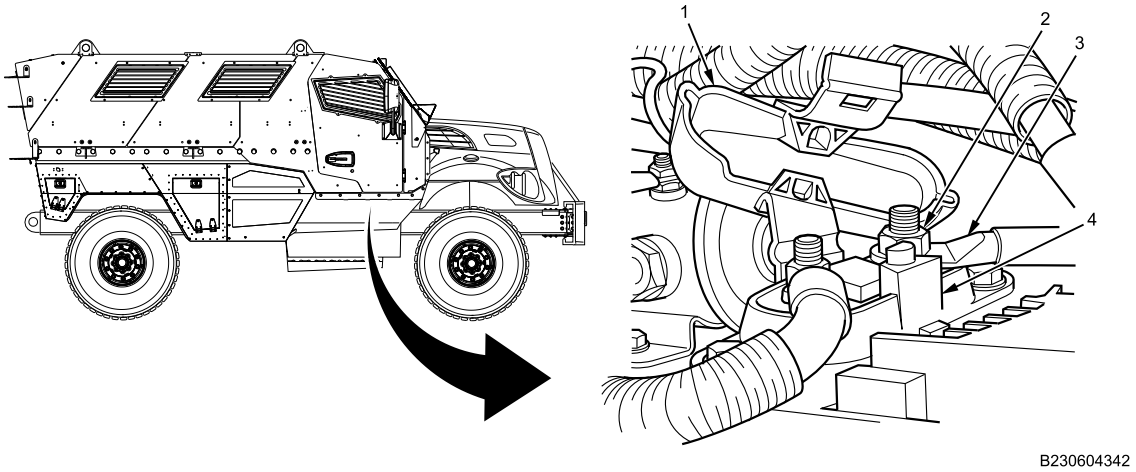

Figure 5. 300A Megafuse and Holder.

3. Install megafuse cover (Figure 5, Item 1) on megafuse holder (Figure 5, Item 4).

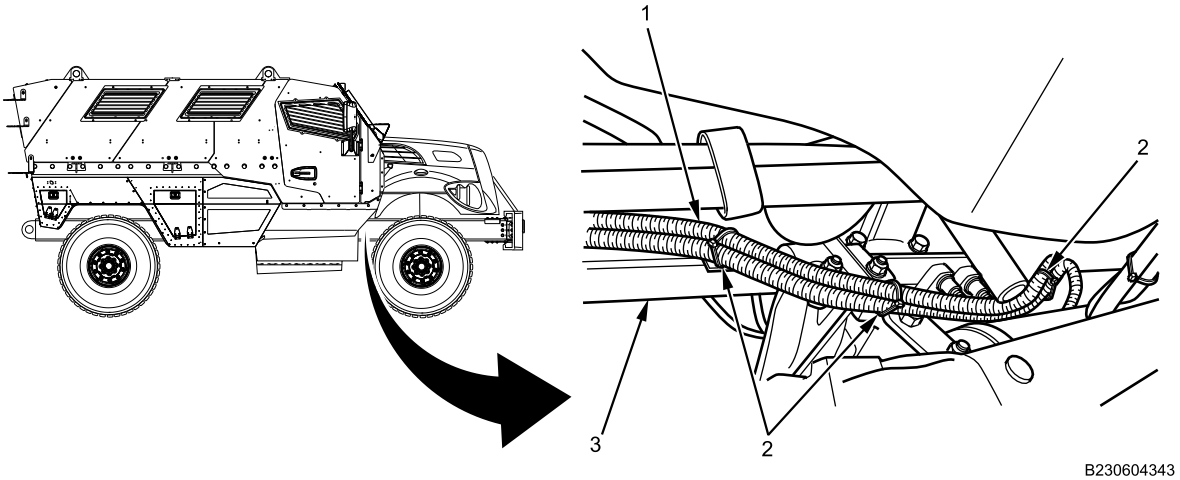

Figure 6. Winch Cables Along Right Side Frame Rail.

4. Install new cable lock straps (Figure 6, Item 2) on winch feed cable (Figure 6, Item 1) where needed along right side frame rail (Figure 6, Item 3).

END OF TASK

WINCH FEED CABLE REMOVAL AND INSTALLATION - (CONTINUED)

FOLLOW-ON MAINTENANCE

1. Connect battery cables (WP 0404).
2. Turn MAIN POWER switch on (TM 9-2355-106-10).
3. Verify winch system operation (TM 9-2355-106-10).
4. Turn MAIN POWER switch off (TM 9-2355-106-10).
5. Remove wheel chocks (TM 9-2355-106-10).

END OF TASK

END OF WORK PACKAGE

FIELD MAINTENANCE

WINCH GROUND CABLE REMOVAL AND INSTALLATION

INITIAL SETUP:

Tools and Special Tools
General Mechanic's Tool Kit (GMTK) (WP 0795, Item 37)

Materials/Parts
Lockwasher - (1) (WP 0796, Item 24)
Cable lock strap - (10) (WP 0796, Item 134)

References
TM 9-2355-106-10
TM 9-2355-106-23P
WP 0782

Equipment Condition
Parking brake set (TM 9-2355-106-10)
Transmission set in NEUTRAL (N) (TM 9-2355-106-10)
Engine off (TM 9-2355-106-10)
MAIN POWER switch off (TM 9-2355-106-10)
Wheels chocked (TM 9-2355-106-10)
Battery cables disconnected (WP 0404)

WARNING

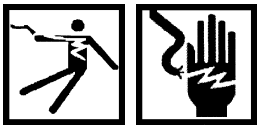

Use extreme caution when testing or working on or around electrical circuits. Always assume that electrical circuits are live. Electrical shock can occur upon contact with voltage high enough to cause current flow through muscles or nerves. On Direct Current (DC) systems, generally 1 milliamp of current can be felt, 5 milliamps can cause severe pain, 15 milliamps can cause loss of muscle control, and 70 milliamps can be fatal. Wear protective clothing; ensure skin, clothing, and surrounding areas are dry; do not wear jewelry; and touch only the insulated, nonmetallic parts of electrical components and testing equipment. To prevent electrical arcing, avoid shorting electrical test probes and jumper wires. Electrical arcing can cause bright flashes of light, capable of causing temporary blindness. If electrical injury occurs, immediately shut off power supply and seek medical assistance. Failure to comply may result in serious injury or death to personnel.

NOTE

Remove cable lock straps as necessary to perform procedure. Note position and size of cable lock straps to aid installation.

WINCH GROUND CABLE REMOVAL AND INSTALLATION - (CONTINUED)

REMOVAL

1. Remove nut (Figure 1, Item 6), lockwasher (Figure 1, Item 4), winch assembly BLACK cable (Figure 1, Item 3), flat washer (Figure 1, Item 2), and winch BLACK ground cable (Figure 1, Item 1) from junction block (Figure 1, Item 5). Discard lockwasher.

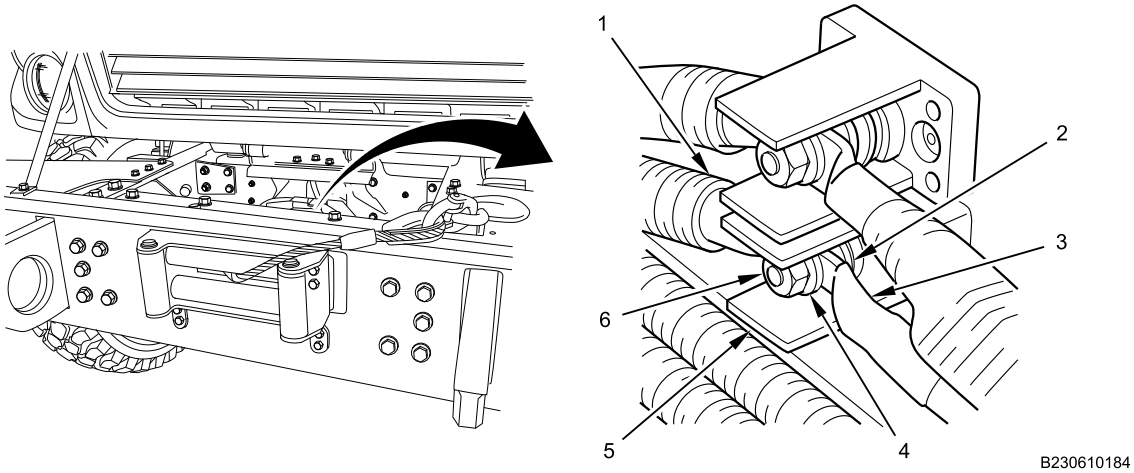

Figure 1. Junction Block.

2. Remove bolt and washer (Figure 2, Item 1) from right side wheel deflector (Figure 2, Item 3) and remove winch BLACK ground cable (Figure 2, Item 2).

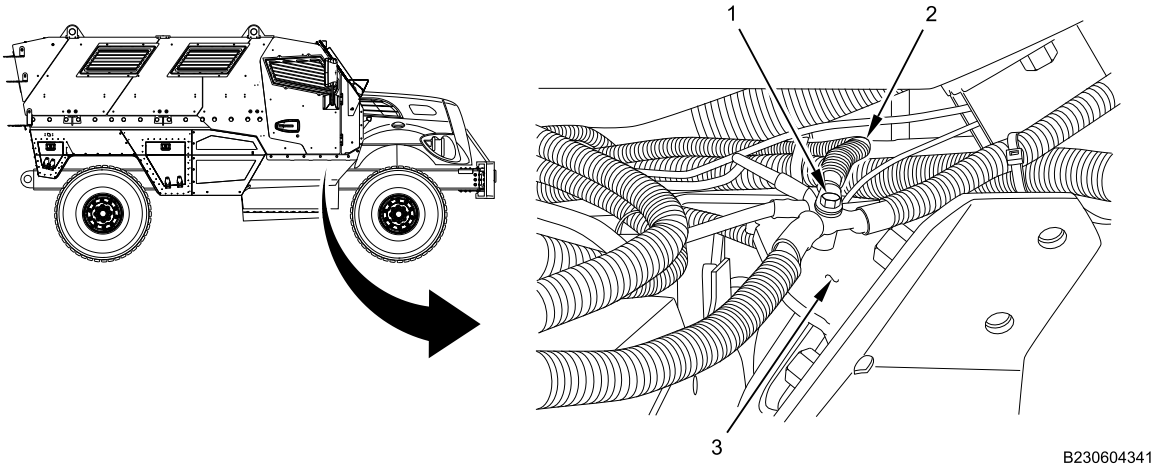

Figure 2. Ground Cable.

WINCH GROUND CABLE REMOVAL AND INSTALLATION - (CONTINUED)

3. Remove and discard cable lock straps (Figure 3, Item 2) along inner right side frame rail (Figure 3, Item 3). Remove ground cables (Figure 3, Item 1).

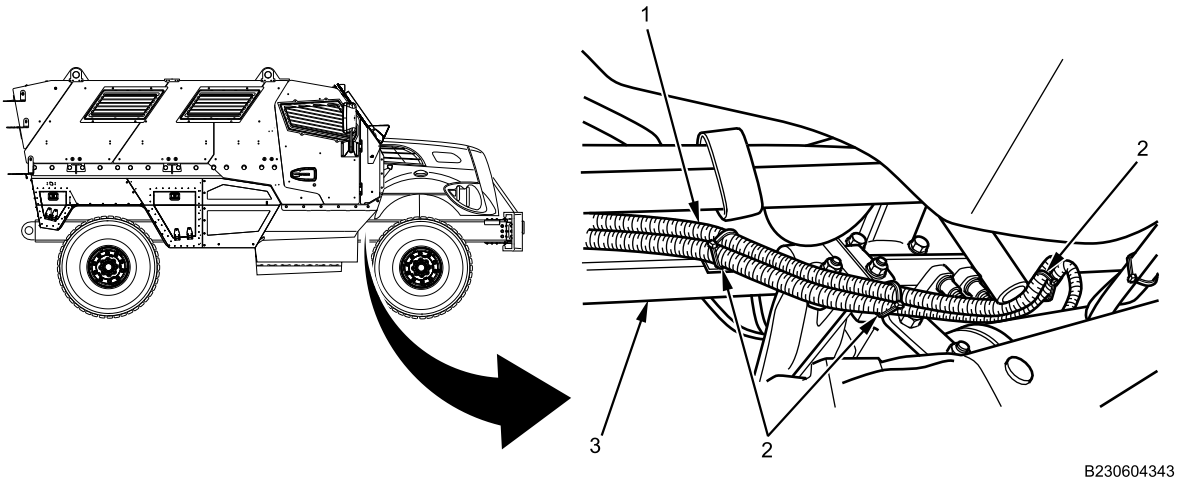

Figure 3. Winch Cables Along Right Side Frame Rail.

END OF TASK

INSTALLATION

1. Install winch BLACK ground cable (Figure 4, Item 6), flat washer (Figure 4, Item 1), winch assembly BLACK cable (Figure 4, Item 2), new lockwasher (Figure 4, Item 3), and nut (Figure 4, Item 5) on junction block (Figure 4, Item 4). Tighten nut securely.

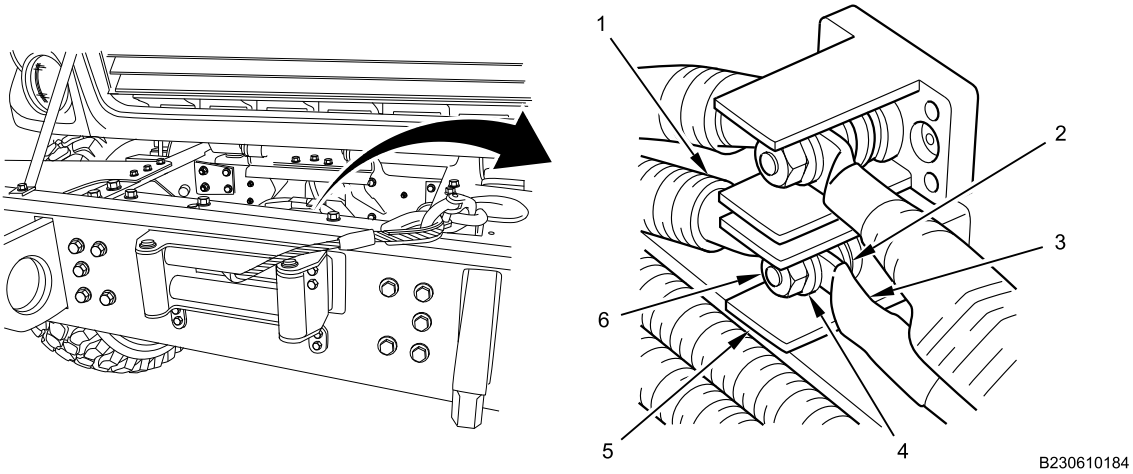

Figure 4. Junction Block.

WINCH GROUND CABLE REMOVAL AND INSTALLATION - (CONTINUED)

2. Install winch BLACK ground cable (Figure 5, Item 2) on right side wheel deflector (Figure 5, Item 3) with bolt and washer (Figure 5, Item 1). Tighten bolt securely.

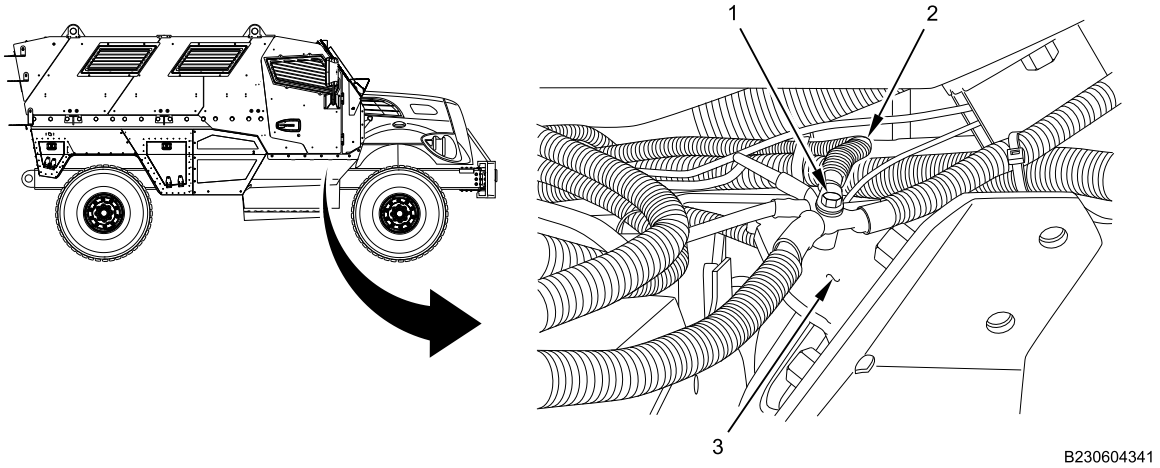

Figure 5. Ground Cable.

3. Install new cable lock straps (Figure 6, Item 2) on winch cables (Figure 6, Item 1) where needed along right side frame rail (Figure 6, Item 3).

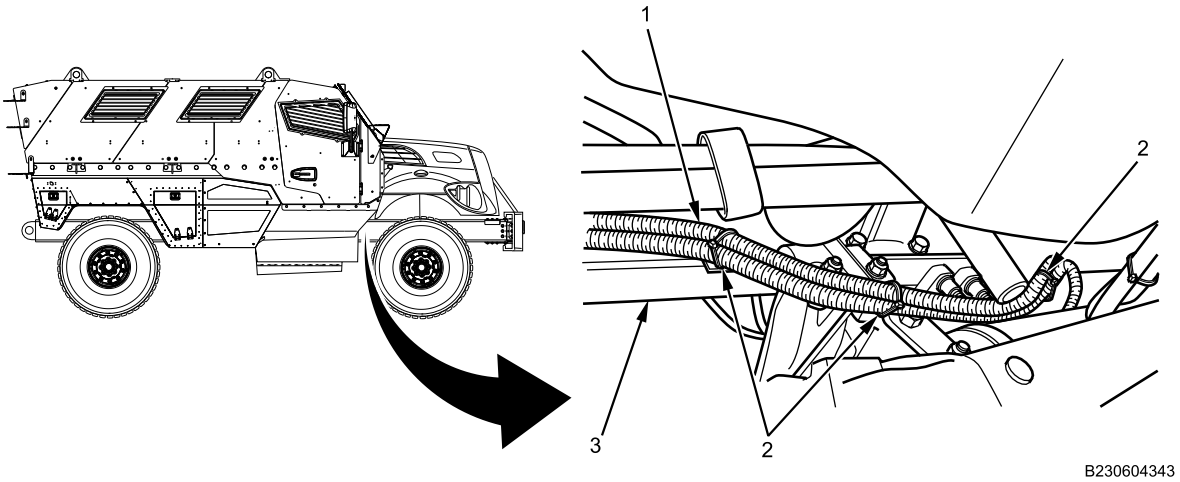

Figure 6. Winch Cables Along Right Side Frame Rail.

END OF TASK

FOLLOW-ON MAINTENANCE

1. Connect battery cables (WP 0404).
2. Turn MAIN POWER switch on (TM 9-2355-106-10).
3. Verify winch system operation (TM 9-2355-106-10).
4. Turn MAIN POWER switch off (TM 9-2355-106-10).
5. Remove wheel chocks (TM 9-2355-106-10).

END OF TASK

END OF WORK PACKAGE

FIELD MAINTENANCE

BATTERY REMOVAL AND INSTALLATION

INITIAL SETUP:

Tools and Special Tools
General Mechanic's Tool Kit (GMTK) (WP 0795, Item 37)

Materials/Parts
Grease (WP 0794, Item 22)
Locknuts - (4) (WP 0796, Item 135)

References
TM 9-2355-106-10
TM 9-2355-106-23P
WP 0782

Equipment Condition
Parking brake set (TM 9-2355-106-10)
Transmission set in NEUTRAL (N) (TM 9-2355-106-10)
Engine off (TM 9-2355-106-10)
MAIN POWER switch off (TM 9-2355-106-10)
Wheels chocked (TM 9-2355-106-10)
Battery cables removed (WP 0407)

WARNING

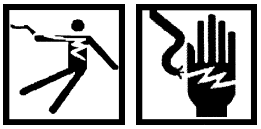

Use extreme caution when testing or working on or around electrical circuits. Always assume that electrical circuits are live. Electrical shock can occur upon contact with voltage high enough to cause current flow through muscles or nerves. On Direct Current (DC) systems, generally 1 milliamp of current can be felt, 5 milliamps can cause severe pain, 15 milliamps can cause loss of muscle control, and 70 milliamps can be fatal. Wear protective clothing; ensure skin, clothing, and surrounding areas are dry; do not wear jewelry; and touch only the insulated, nonmetallic parts of electrical components and testing equipment. To prevent electrical arcing, avoid shorting electrical test probes and jumper wires. Electrical arcing can cause bright flashes of light, capable of causing temporary blindness. If electrical injury occurs, immediately shut off power supply and seek medical assistance. Failure to comply may result in serious injury or death to personnel.

NOTE

When replacing only the front or rear batteries, the center battery next to the one being serviced must be removed first for clearance.

BATTERY REMOVAL AND INSTALLATION - (CONTINUED)

REMOVAL

1. Disconnect battery clamp adaptor studs (Figure 1, Item 1) from all batteries and set aside. Refer to Battery Stud Adapter Terminal Clamp Removal and Installation (WP 0409).

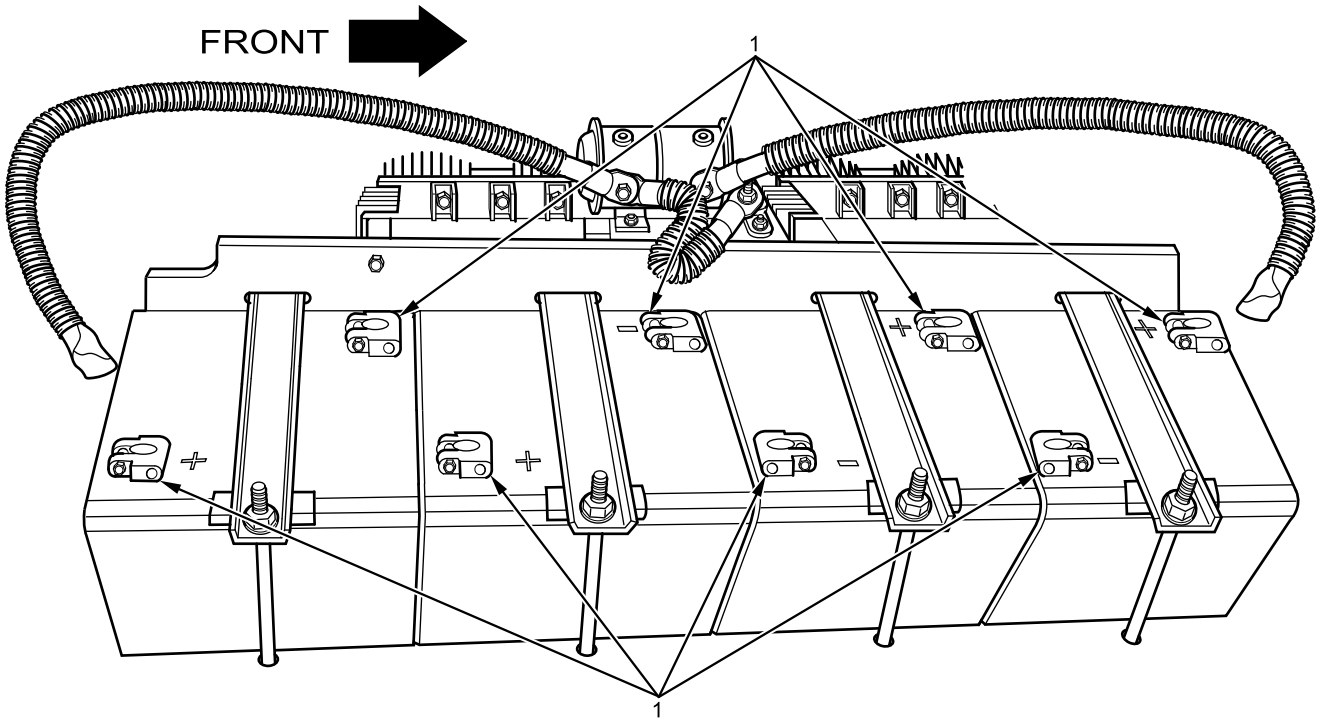

Figure 1. Battery Clamp Adaptor Stud.

2. Remove locknut (Figure 2, Item 1) and washer from battery holddown stud (Figure 2, Item 3). Discard locknut (Figure 2, Item 1).

BATTERY REMOVAL AND INSTALLATION - (CONTINUED)

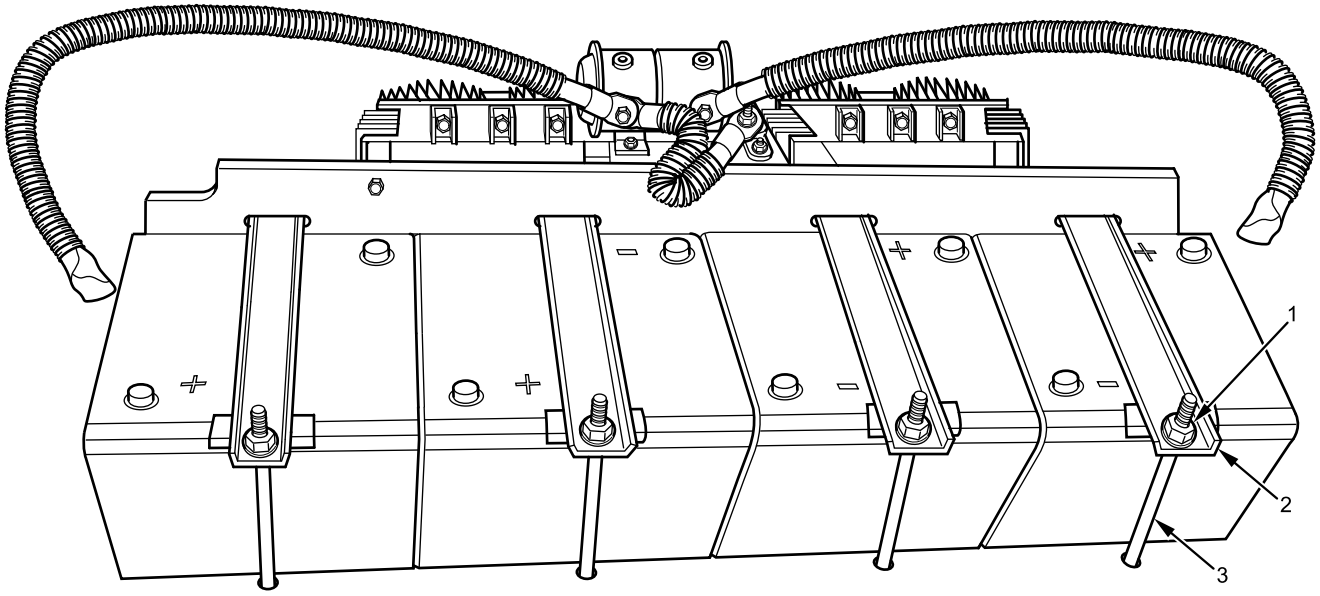

Figure 2. Battery Holddown Bracket.

3. Remove battery holddown bracket (Figure 2, Item 2).
4. Remove stud (Figure 2, Item 3).
5. Remove battery from vehicle.
6. Repeat steps 2 through 4 on remaining batteries as needed.

END OF TASK

BATTERY REMOVAL AND INSTALLATION - (CONTINUED)

INSTALLATION

WARNING

Dielectric grease is harmful to skin and eyes. If grease contacts eyes, rinse thoroughly and contact physician if irritation persists. If skin is contacted, wash thoroughly with soap and water. Failure to comply may result in serious injury to personnel.

NOTE

Apply dielectric grease to all electrical connections.

Install outer batteries first.

1. Position battery on battery tray.

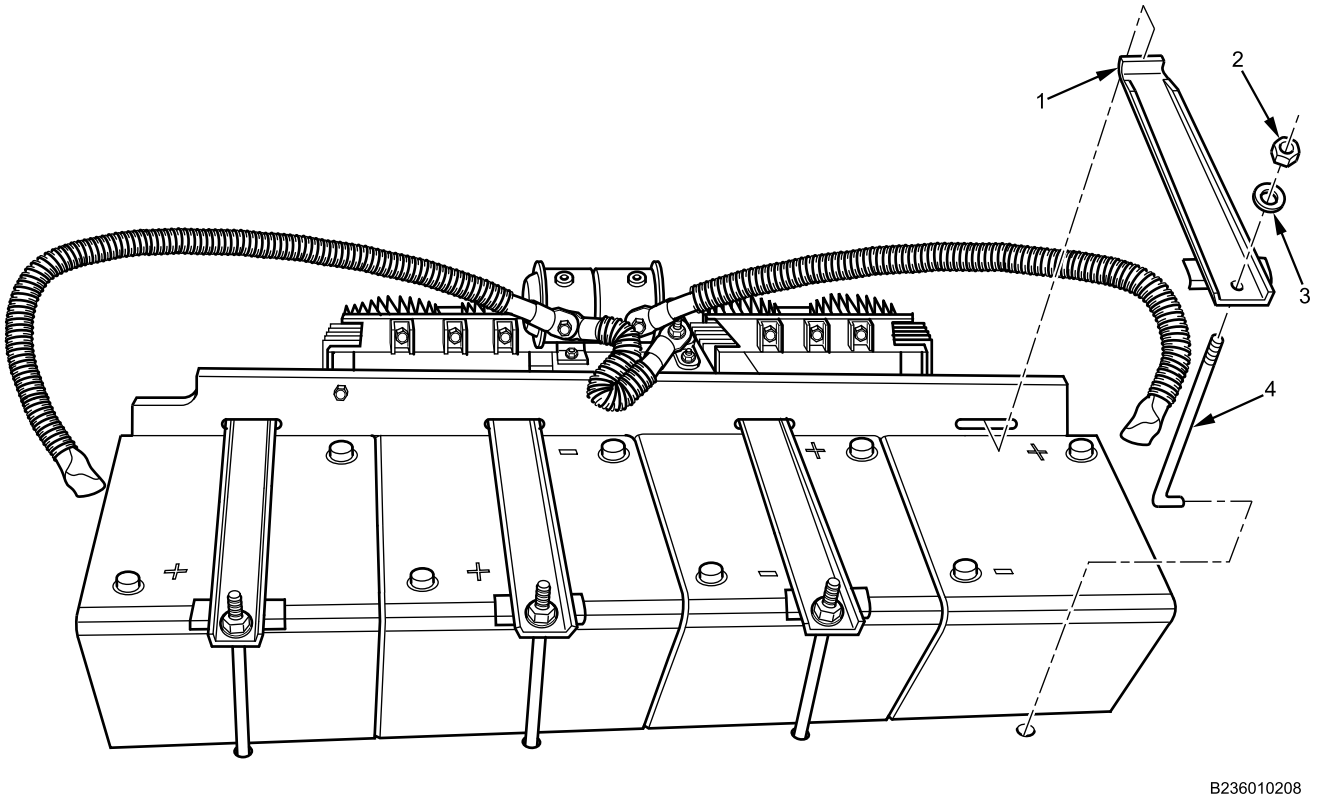

Figure 3. Battery Installation.

2. Install battery holddown bracket (Figure 3, Item 1) on top of battery.
3. Position battery holddown stud (Figure 3, Item 4) through holddown bracket (Figure 3, Item 1), and install new locknut and washer (Figure 3, Item 2 and 3), tighten securely.
4. Repeat steps 1 through 3 on remaining batteries as needed.
5. Connect battery clamp adaptor studs (Figure 4, Item 1) to all batteries (Figure 4, Item 2) and tighten securely. Refer to Battery Stud Adapter Terminal Clamp Removal and Installation (WP 0409).

BATTERY REMOVAL AND INSTALLATION - (CONTINUED)

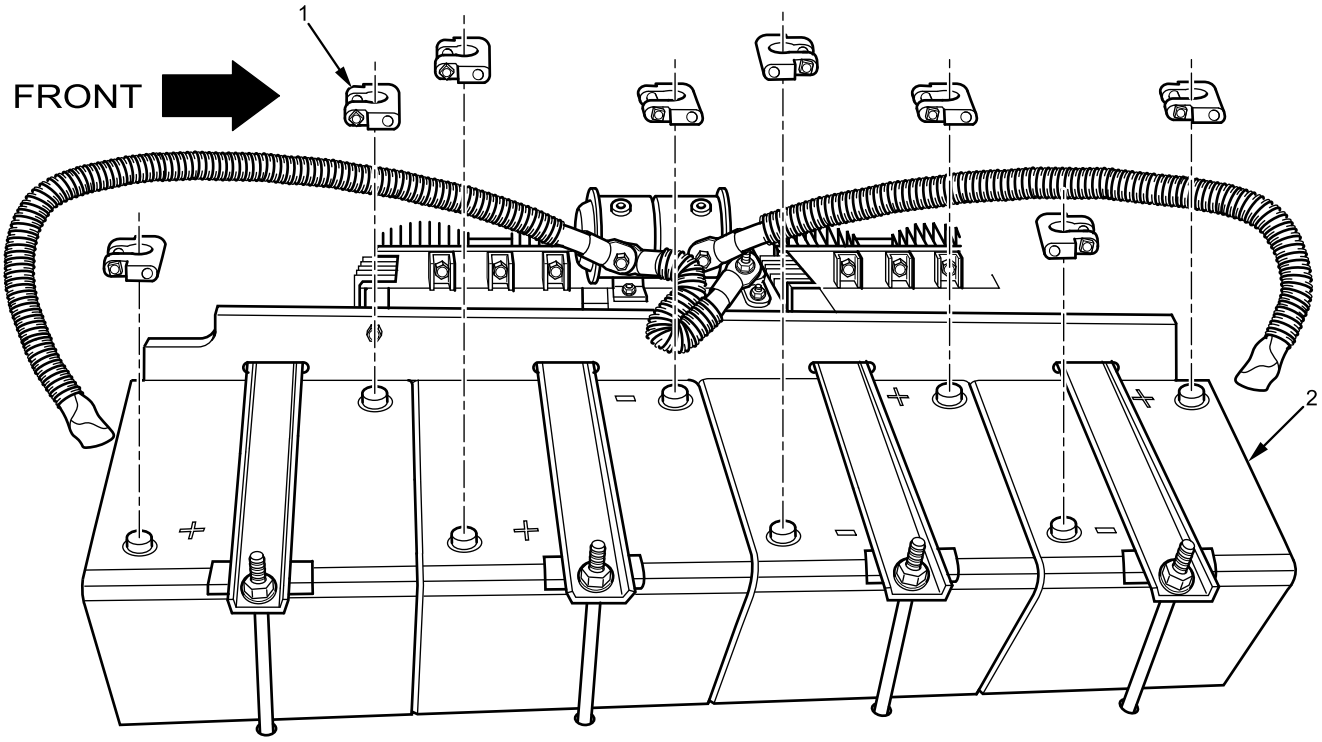

Figure 4. Battery Clamps.

END OF TASK

FOLLOW-ON MAINTENANCE

1. Battery cables installed (WP 0407).
2. Turn MAIN POWER switch on (TM 9-2355-106-10).
3. Start engine (TM 9-2355-106-10).
4. Turn engine off (TM 9-2355-106-10).
5. Turn MAIN POWER switch off (TM 9-2355-106-10).
6. Remove wheel chocks (TM 9-2355-106-10).

END OF TASK

END OF WORK PACKAGE

FIELD MAINTENANCE

BATTERY BOX REMOVAL AND INSTALLATION

INITIAL SETUP:

Tools and Special Tools
General Mechanic's Tool Kit (GMTK) (WP 0795, Item 37)

Materials/Parts
Compound (WP 0794, Item 13)
Cable lock straps (WP 0796, Item 124)
Goggles, industrial (WP 0794, Item 20)
Faceshield, industrial (WP 0794, Item 16)
Gloves (WP 0794, Item 18)

References
TM 9-2355-106-10
TM 9-2355-106-23P
WP 0782

Equipment Condition
Parking brake set (TM 9-2355-106-10)
Transmission set in NEUTRAL (N) (TM 9-2355-106-10)
Engine off (TM 9-2355-106-10)
MAIN POWER switch off (TM 9-2355-106-10)
Wheels chocked (TM 9-2355-106-10)
Engine hood open and secure (TM 9-2355-106-10)
Batteries removed (WP 0418)
Belly armor removed (WP 0606)
Air reservoir tanks removed (WP 0499)
Battery equalizers removed (WP 0350)
Winch megafuse removed (WP 0448)
12V and 24V MAIN POWER switch removed (WP 0341)

WARNING

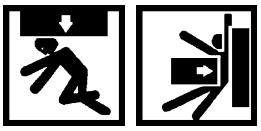

Engine hood is extremely heavy and requires two-person lift. Ensure that there is adequate space in front of the vehicle to open hood completely without pinning or pinching personnel between hood and any other structure. Use extreme care when working under hood and make sure it is properly supported. Failure to comply may result in serious injury or death to personnel.

BATTERY BOX REMOVAL AND INSTALLATION - (CONTINUED)

REMOVAL

NOTE

Note wire routing behind battery box during removal for installation.

1. Remove two vertical outboard battery tray nuts (Figure 1, Item 4), air tank drain cable retainers (Figure 1, Item 3), and two outboard bolts from left and right battery box support brackets (Figure 1, Item 1).

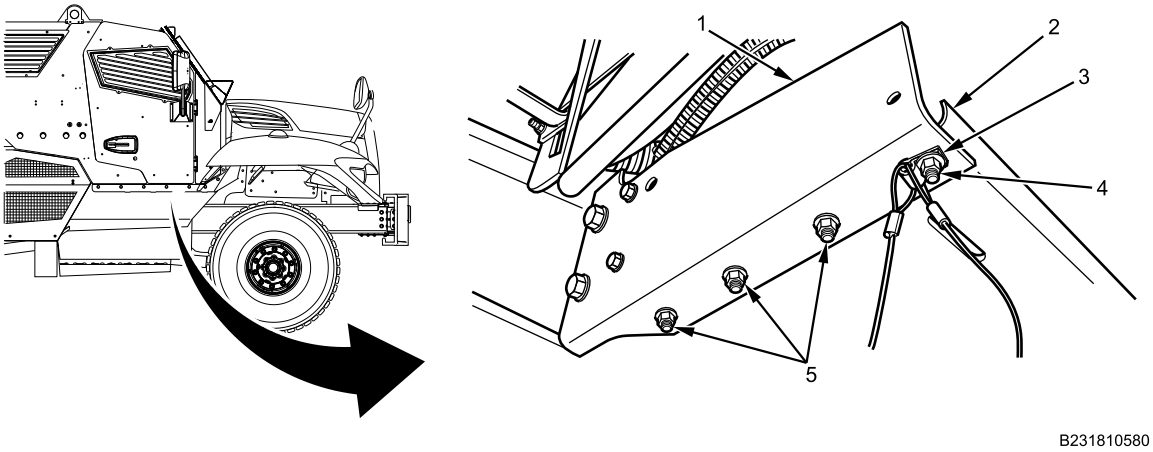

Figure 1. Battery Box Removal.

2. Remove remaining six vertical battery tray nuts and bolts (Figure 1, Item 5) from left and right battery box support brackets (Figure 1, Item 1) and battery tray (Figure 1, Item 2).

NOTE

Note location of cable lock straps for installation.

3. Remove cable lock straps securing wire harness to battery box support bracket (Figure 1, Item 1). Discard cable lock straps.

BATTERY BOX REMOVAL AND INSTALLATION - (CONTINUED)

NOTE

Left battery tray bolts shown, right battery tray bolts same.

4. Remove four horizontal battery tray nuts and bolts (Figure 2, Item 5) from left and right battery box support brackets (Figure 2, Item 2).

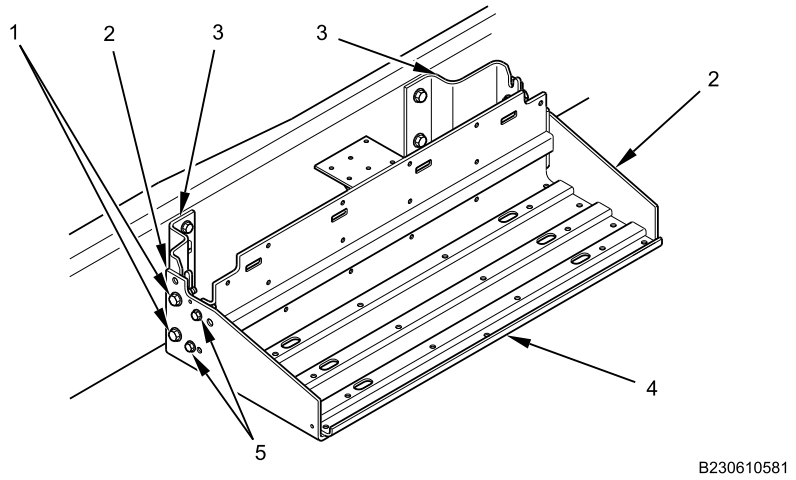

Figure 2. Battery Tray Removal.

5. Remove battery tray (Figure 2, Item 4).
6. Remove four horizontal left and right battery box support brackets bolts (Figure 2, Item 1) from battery support bracket (Figure 2, Item 2) rear battery box support brackets (Figure 2, Item 3). Remove left and right battery box support brackets.

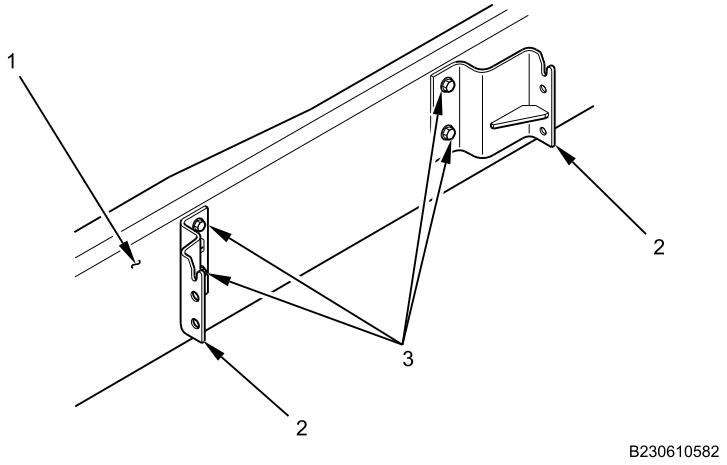

Figure 3. Rear Battery Support Brackets.

7. Remove four bolts (Figure 3, Item 3) and rear support brackets (Figure 3, Item 2) from vehicle frame (Figure 3, Item 1).

END OF TASK

BATTERY BOX REMOVAL AND INSTALLATION - (CONTINUED)

INSTALLATION

WARNING

Corrosion preventive compound is toxic. Use only in well-ventilated area. Do not get in eyes; wear chemical safety goggles and full-face shield when using. Avoid contact with skin and wear rubber or plastic, solvent-resistant gloves. In case of contact, remove contaminated clothing and immediately wash area with soap and water. If compound contacts eyes, flush eyes with large amounts of water for at least 15 minutes and get immediate medical attention. If swallowed, do not induce vomiting; contact a physician immediately. Failure to comply may result in serious injury or death to personnel.

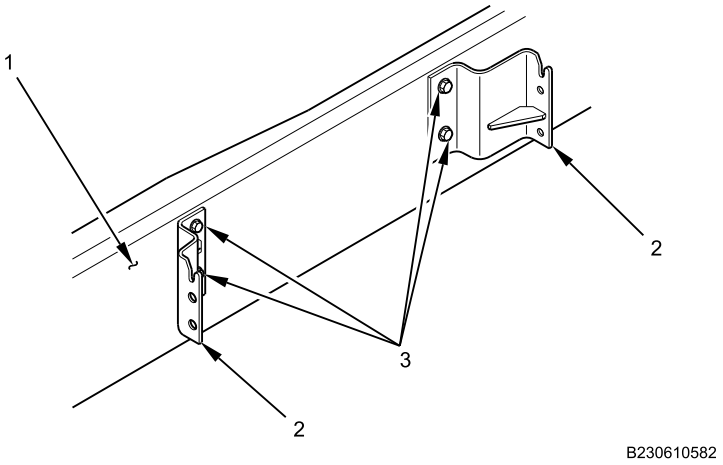

Figure 4. Rear Battery Support Brackets.

1. Apply corrosion preventive compound to all bolts.
2. Install rear battery support bracket (Figure 4, Item 2) on vehicle frame (Figure 4, Item 1) with four bracket bolts (Figure 4, Item 3).

BATTERY BOX REMOVAL AND INSTALLATION - (CONTINUED)

NOTE

Left battery tray bolts shown, right battery tray bolts same.

3. Install left and right battery box support brackets (Figure 5, Item 2) on rear battery support brackets (Figure 5, Item 3) with four left and right battery box support brackets bolts (Figure 5, Item 1) and nuts.

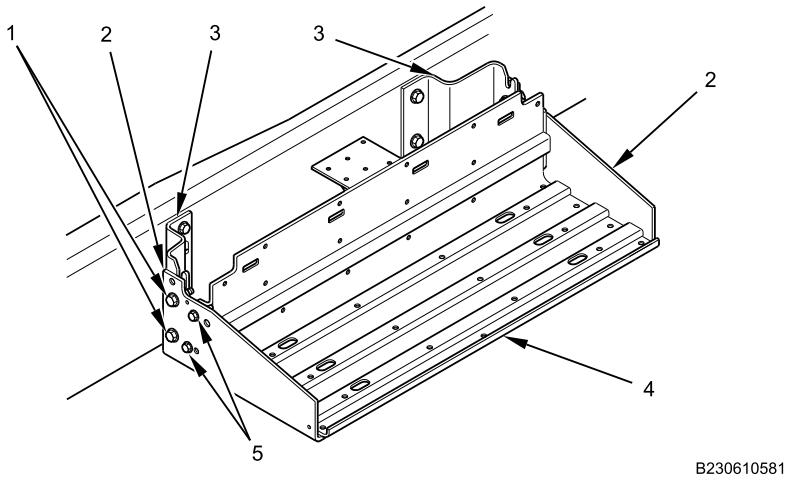

Figure 5. Battery Tray Installation.

4. Install battery tray (Figure 5, Item 4).
5. Install four battery tray nuts and bolts (Figure 5, Item 5) on left and right battery box support brackets (Figure 5, Item 2). Tighten bolts securely.
6. Install six inboard vertical battery tray nuts and bolts (Figure 6, Item 5) on left and right battery box support brackets (Figure 6, Item 1) and battery tray (Figure 6, Item 2). Tighten bolts securely.

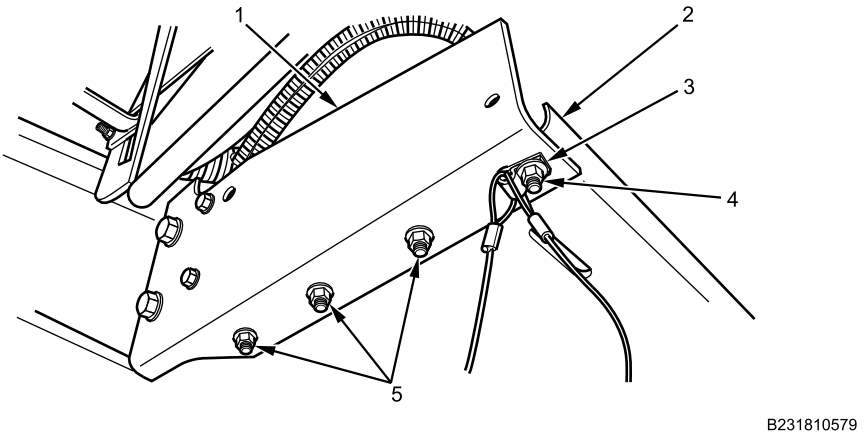

Figure 6. Battery Box Installation.

7. Install two vertical outboard battery tray bolts, air tank drain cable retainers (Figure 6, Item 3), and battery tray nuts (Figure 6, Item 4) on left and right battery box support brackets (Figure 6, Item 1). Tighten bolts securely.

BATTERY BOX REMOVAL AND INSTALLATION - (CONTINUED)

8. Install cable lock straps where required.

END OF TASK

FOLLOW-ON MAINTENANCE

1. Install 12V and 24V MAIN POWER switch (WP 0341).
2. Install winch megafuse (WP 0448).
3. Install battery equalizers (WP 0350).
4. Install air reservoir tanks (WP 0499).
5. Install batteries (WP 0418).
6. Turn MAIN POWER switch on (TM 9-2355-106-10).
7. Remove wheel chocks (TM 9-2355-106-10).
8. Test-drive vehicle to verify electrical operation of all circuits.
9. Set transmission in NEUTRAL (N) (TM 9-2355-106-10).
10. Turn engine off (TM 9-2355-106-10).
11. Set vehicle parking brake (TM 9-2355-106-10).
12. Turn MAIN POWER switch off (TM 9-2355-106-10).
13. Install belly armor (WP 0606).

END OF TASK

END OF WORK PACKAGE

FIELD MAINTENANCE

ELECTRICAL WIRE REPAIR PROCEDURES

INITIAL SETUP:

Tools and Special Tools
General Mechanic's Tool Kit (GMTK) (WP 0795, Item 37)
Soldering gun, 3-wire (WP 0795, Item 113)
Terminal Kit (WP 0795, Item 121)
Crimping tool, terminal (WP 0795, Item 25)
Heat gun (WP 0795, Item 54)

Materials/Parts
Solder (WP 0794, Item 48)
Sealant (WP 0794, Item 40)

References
TM 9-2355-106-10
TM 9-2355-106-23P
WP 0782

Equipment Condition
Parking brake set (TM 9-2355-106-10)
Transmission set in NEUTRAL (N) (TM 9-2355-106-10)
Engine off (TM 9-2355-106-10)
MAIN POWER switch off (TM 9-2355-106-10)
Wheels chocked (TM 9-2355-106-10)

ELECTRICAL WIRE REPAIR OVERVIEW

Wire repairs should always be soldered and then insulated with heatshrink tubing. With larger wire diameters, crimp a splice clip over the splice and then solder. In some cases, it may be necessary to use an insulated butt connector as a temporary fix. Replace with a soldered connection when time permits. Butt connectors do not guard against conditions that could cause corrosion and failure of the electrical circuit.

ELECTRICAL WIRE REPAIR PROCEDURES - (CONTINUED)

ELECTRICAL WIRE REPAIR PROCEDURE

WARNING

Use extreme caution when testing or working on or around electrical circuits. Always assume that electrical circuits are live. Electrical shock can occur upon contact with voltage high enough to cause current flow through muscles or nerves. On Direct Current (DC) systems, generally 1 milliamp of current can be felt, 5 milliamps can cause severe pain, 15 milliamps can cause loss of muscle control, and 70 milliamps can be fatal. Wear protective clothing; ensure skin, clothing, and surrounding areas are dry; do not wear jewelry; and touch only the insulated, nonmetallic parts of electrical components and testing equipment. To prevent electrical arcing, avoid shorting electrical test probes and jumper wires. Electrical arcing can cause bright flashes of light, capable of causing temporary blindness. If electrical injury occurs, immediately shut off power supply and seek medical assistance. Failure to comply may result in serious injury or death to personnel.

Turn MAIN POWER switch off prior to performing maintenance on battery or electrical system. Always remove negative battery terminals first. When reconnecting, always connect negative terminals last to avoid arcing or sparks that could cause an explosion. Do not allow tools to contact battery box or other battery terminals when removing or installing terminals. Failure to comply may result in damage to equipment and serious injury or death to personnel.

Disconnect battery ground cable or power source prior to working on electrical components. If electrical shock occurs, administer first aid and seek medical assistance immediately. Failure to comply may result in serious injury or death to personnel.

Never use open flame to apply heat to heatshrink tubing. Allow heatshrink tubing to cool before handling. Failure to comply may result in serious injury to personnel.

Allow solder to cool before handling. Failure to comply may result in serious injury to personnel.

Do not use a circuit breaker, fuse, fusible link, or relay with higher amperage rating than listed for a particular application. Using higher amperage will overheat the electrical circuit, causing melted components and possible fire. Failure to comply may result in damage to equipment and serious injury or death to personnel.

CAUTION

Splice clips vary by wire diameter. To ensure secure wire repair, only use the splice clip size specified for the wire being repaired. Do not modify splice clip to fit. Failure to comply may result in damage to equipment.

Do not apply excessive heat to heatshrink tubing. Excessive heat may cause heatshrink tubing to split or melt.

ELECTRICAL WIRE REPAIR PROCEDURES - (CONTINUED)

NOTE

If copper wire is discolored, copper is oxidized or heat damaged and will not solder correctly. Cut wire back until clean copper is exposed. Install length of wire to replace damaged wire where necessary. If damage to wire harness is extensive, replace wire harness.

The procedure for installing fusible links is similar to the following procedure. Ensure the new fusible link is the proper size and rating and use splice clips.

1. Cut out damaged portion of wire to be repaired.

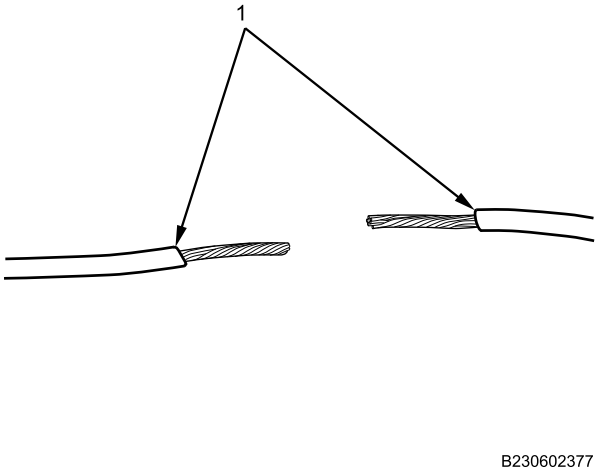

Figure 1. Wire Preparation.

2. Strip 1/2 inch of insulation from both wire ends (Figure 1, Item 1). Ensure no wire strands have been cut and twist any loose strands.
3. Slide a piece of heatshrink tubing (Figure 2, Item 1) over wire (Figure 2, Item 2), far enough from splice to avoid shrinking during the soldering process. Ensure tubing is correct size so it will shrink tightly around spliced connection and will not leave any part of conductor exposed. If repairing J1939 communication wires, place a second piece of shrink tubing around wire harness that is large enough to accommodate the soldered joint, shrink tubing, and a piece of foil tape used for shielding.

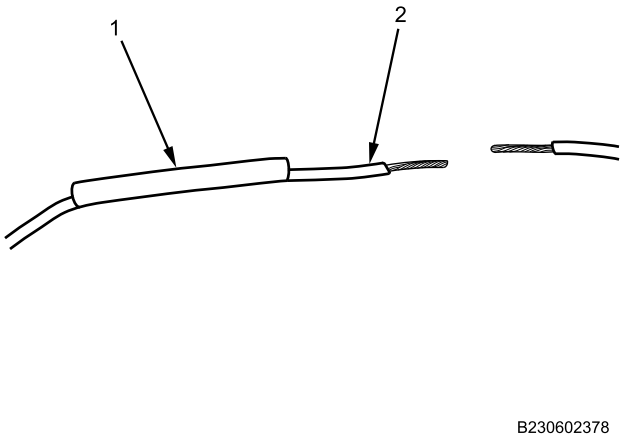

Figure 2. Heatshrink Tubing.

ELECTRICAL WIRE REPAIR PROCEDURES - (CONTINUED)

4. For smaller diameter wires, join two ends of wire and twist together. With larger diameter wires and fusible links, crimp a splice clip (Figure 3, Item 1) over splice with proper crimping tool. If repairing J1708 or J1939 communication wires, ensure twist in wire pair is maintained.

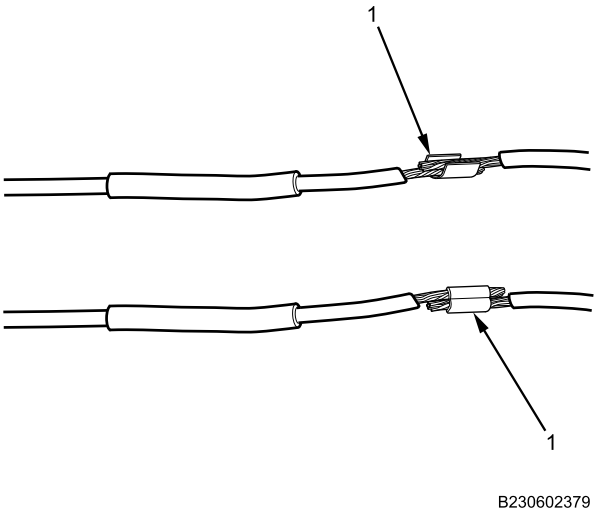

Figure 3. Splice Clip.

5. Heat splice (Figure 4, Item 1) with a soldering iron (Figure 4, Item 2) from below. Apply rosin core solder (Figure 4, Item 3) on top of splice until melted solder wicks into wire strands (Figure 4, Item 4). Do not disturb splice until solder is cool.

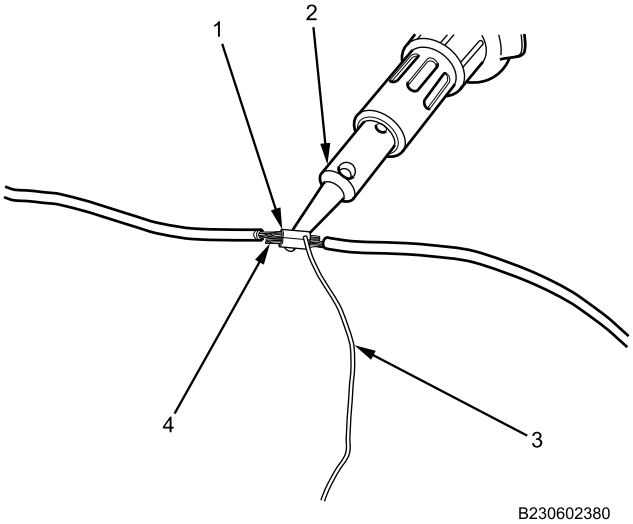

Figure 4. Soldering.

ELECTRICAL WIRE REPAIR PROCEDURES - (CONTINUED)

CAUTION

Do not use excessive heat when applying heat to shrink tubing. The tubing may melt or split.

Do not use an open flame to shrink tubing. Black carbon traces could cause a shorted connection, especially on low-voltage, solid-state circuits.

6. When solder is cool, slide heatshrink tubing (Figure 5, Item 1) over repair. Apply heat evenly with a heat gun, moving back and forth from one end of the tube to the other. Apply heat 360 degrees around the tubing for a secure seal.

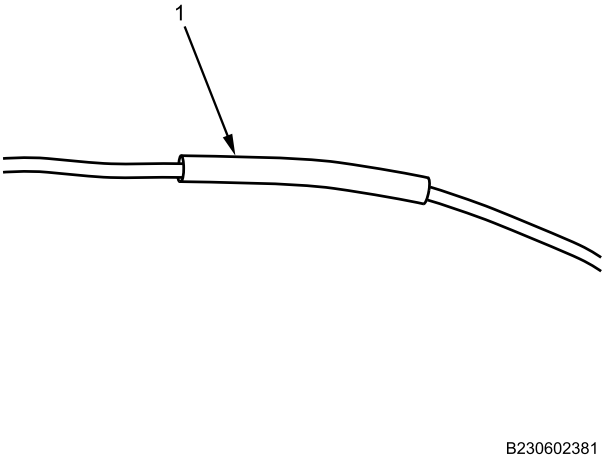

Figure 5. Heatshrink Tubing.

END OF TASK

FOLLOW-ON MAINTENANCE

1. Remove wheel chocks (TM-9-2355-106-10).

END OF TASK

END OF WORK PACKAGE

FIELD MAINTENANCE

NATO JUMP START CONNECTOR REMOVAL AND INSTALLATION

INITIAL SETUP:

Tools and Special Tools
General Mechanic's Tool Kit (GMTK) (WP 0795, Item 37)

Materials/Parts
Grease (WP 0794, Item 22)
Wire tags (WP 0794, Item 33)
Locknut - (4) (WP 0796, Item 142)

References
TM 9-2355-106-10
TM 9-2355-106-23P
WP 0786
WP 0782

Equipment Condition
Parking brake set (TM 9-2355-106-10)
Transmission set in NEUTRAL (N) (TM 9-2355-106-10)
Engine off (TM 9-2355-106-10)
MAIN POWER switch off (TM 9-2355-106-10)
Wheels chocked (TM 9-2355-106-10)
Air conditioning (A/C) condenser panel removed (WP 0672)
Batteries disconnected (WP 0404)

WARNING

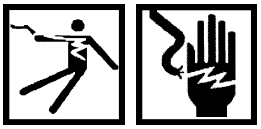

Use extreme caution when testing or working on electrical circuits. Always assume that electrical circuits are live. Electrical shock can occur upon contact with voltage high enough to cause current flow through muscles or nerves. On Direct Current (DC) systems, generally 1 milliamp of current can be felt, 5 milliamps can cause severe pain, 15 milliamps can cause loss of muscle control, and 70 milliamps can be fatal. Wear protective clothing; ensure skin, clothing, and surrounding areas are dry; do not wear jewelry; and touch only the insulated, nonmetallic parts of electrical components and testing equipment. To prevent electrical arcing, avoid shorting electrical test probes and jumper wires. Electrical arcing can cause bright flashes of light, capable of causing temporary blindness. If electrical injury occurs, immediately shut off power supply and seek medical assistance. Failure to comply may result in serious injury or death to personnel.

NOTE

Tag each cable with corresponding connector terminal for installation.

NATO JUMP START CONNECTOR REMOVAL AND INSTALLATION - (CONTINUED)

REMOVAL

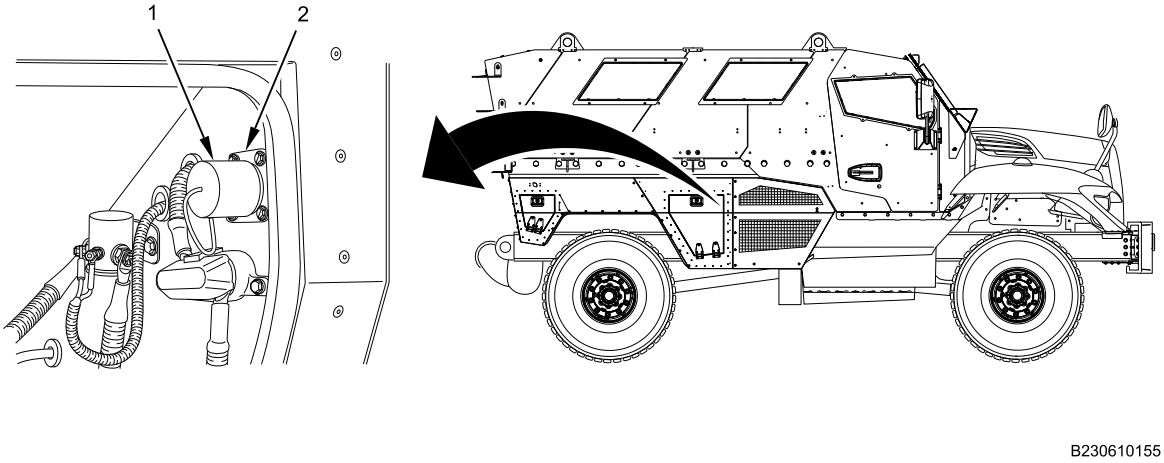

Figure 1. NATO Jump Start Connector Cover.

1. Remove cover (Figure 1, Item 1) from the NATO jump start connector (Figure 1, Item 2).

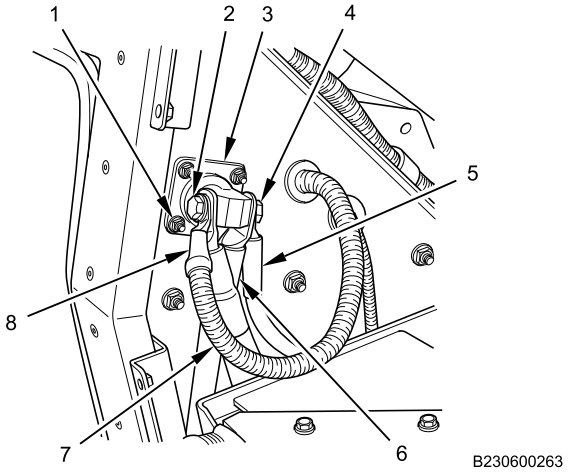

Figure 2. NATO Jump Start Connector Wiring.

2. Remove bolt (Figure 2, Item 2), 150-amp mega fuse cable (Figure 2, Item 8), and positive battery post cable (Figure 2, Item 7) from positive side of NATO jump start connector (Figure 2, Item 3).
3. Remove bolt (Figure 2, Item 4), 120-volt inverter cable (Figure 2, Item 5), and negative battery post cable (Figure 2, Item 6) from negative side of NATO jump start connector (Figure 2, Item 3).

NATO JUMP START CONNECTOR REMOVAL AND INSTALLATION - (CONTINUED)

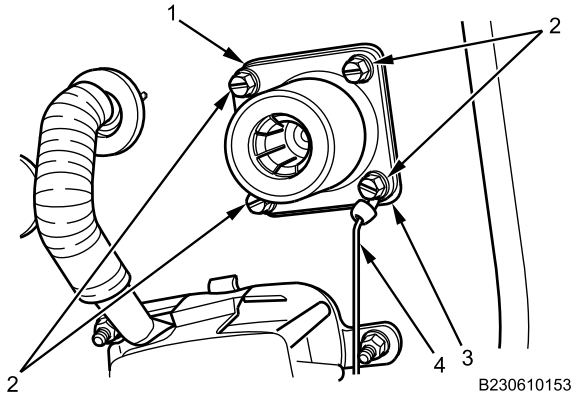

Figure 3. NATO Jump Start Connector Bolts.

4. Remove four bolts (Figure 3, Item 2) and NATO cover lanyard (Figure 3, Item 4) from inside stowage box and remove four locknuts and mounting plate from outside stowage box. Discard locknuts.
5. Remove NATO jump start connector (Figure 3, Item 1) and gasket (Figure 3, Item 3) from stowage box.

END OF TASK

NATO JUMP START CONNECTOR REMOVAL AND INSTALLATION - (CONTINUED)

INSTALLATION

WARNING

Dielectric grease is harmful to skin and eyes. If grease contacts eyes, rinse thoroughly and contact physician if irritation persists. If skin is contacted, wash thoroughly with soap and water. Failure to comply may result in serious injury to personnel.

NOTE

Apply dielectric grease to all electrical connections.

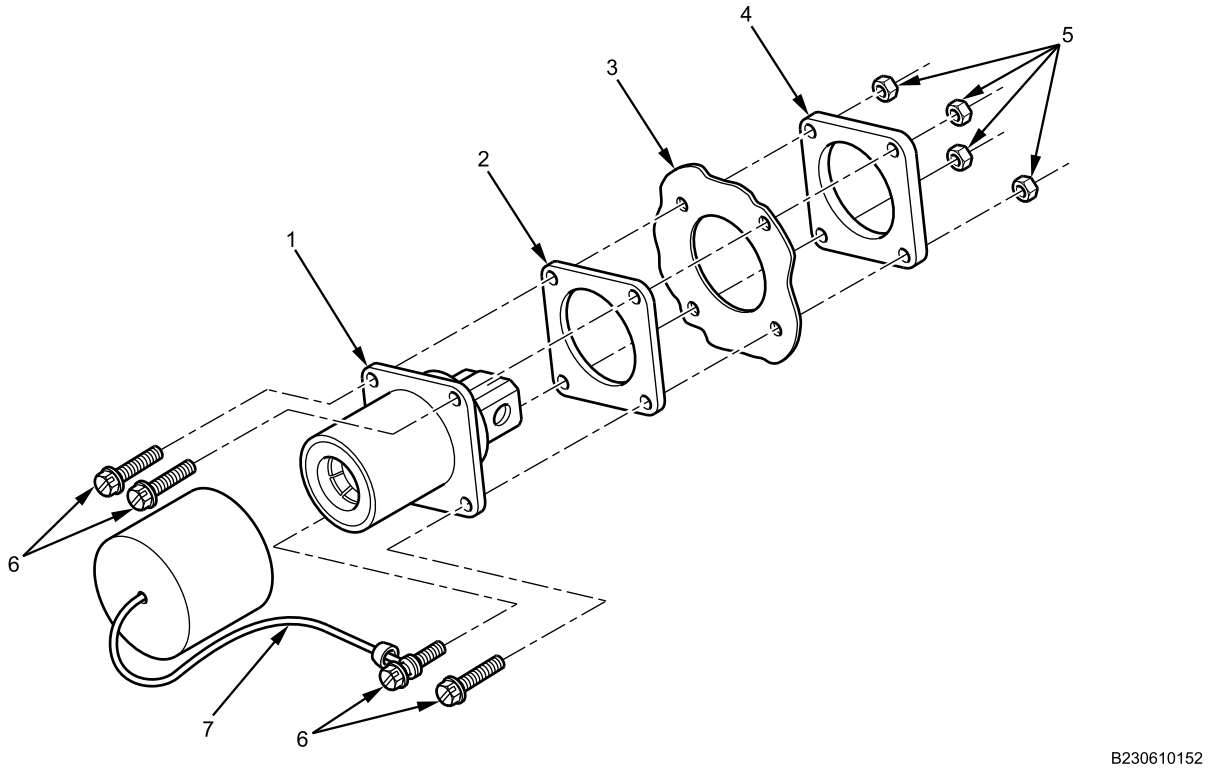

Figure 4. NATO Jump Start Connector Exploded View.

1. Position NATO jump start connector (Figure 4, Item 1) and gasket (Figure 4, Item 2) in stowage box (Figure 4, Item 3).
2. Position NATO jump start connector mounting plate (Figure 4, Item 4) outside stowage box.
3. Install NATO cover lanyard (Figure 4, Item 7) on one retaining bolt (Figure 4, Item 6).
4. Install four bolts (Figure 4, Item 6) and new locknuts (Figure 4, Item 5). Tighten locknuts securely.

NATO JUMP START CONNECTOR REMOVAL AND INSTALLATION - (CONTINUED)

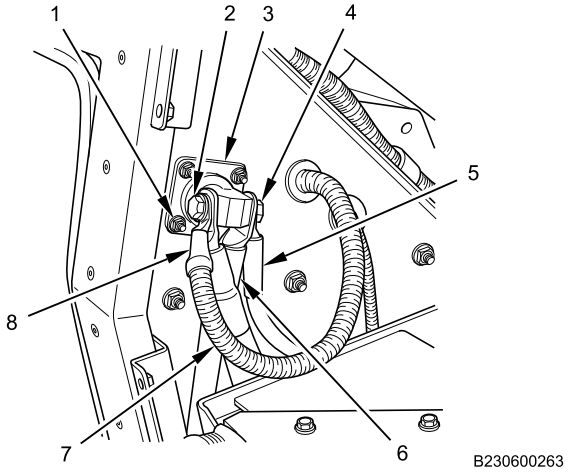

Figure 5. NATO Jump Start Connector Wiring.

5. Position negative battery post cable (Figure 5, Item 6) and 120-volt inverter cable (Figure 5, Item 5) on negative side of NATO jump start connector (Figure 5, Item 3) and secure with bolt (Figure 5, Item 4). Tighten bolt securely.
6. Position positive battery post cable (Figure 5, Item 7) and 150-amp mega fuse cable (Figure 5, Item 8) on positive side of NATO jump start connector (Figure 5, Item 3) and secure with bolt (Figure 5, Item 2). Tighten bolt securely.

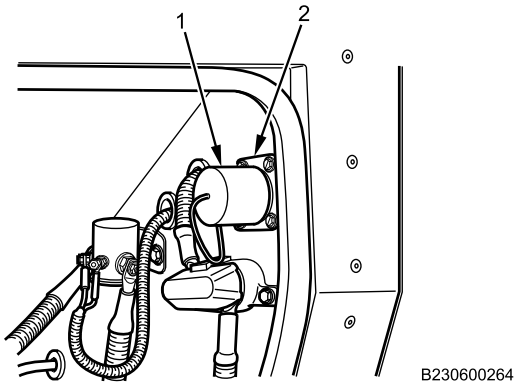

Figure 6. NATO Jump Start Connector Cover.

7. Install cover (Figure 6, Item 1) on NATO jump start connector (Figure 6, Item 2).

END OF TASK

NATO JUMP START CONNECTOR REMOVAL AND INSTALLATION - (CONTINUED)

FOLLOW-ON MAINTENANCE

1. Install air conditioning (A/C) condenser panel (WP 0672).
2. Connect batteries (WP 0404).
3. Turn MAIN POWER switch on (TM 9-2355-106-10).
4. Verify NATO connector operation (TM 9-2355-106-10).
5. Turn MAIN POWER switch off (TM 9-2355-106-10).
6. Remove wheel chocks (TM 9-2355-106-10).

END OF TASK

END OF WORK PACKAGE

FIELD MAINTENANCE

12V UNDERHOOD MEGAFUSE AND HOLDER REMOVAL AND INSTALLATION

INITIAL SETUP:

Tools and Special Tools
General Mechanic's Tool Kit (GMTK) (WP 0795, Item 37)
Blind Rivet Tool Kit (WP 0795, Item 19)
Bit, drill, standard, cobalt, jobber length, 3/16-inch (WP 0795, Item 18)
Drill, hand, VSR, electric 3/8-inch (WP 0795, Item 29)

Materials/Parts
Grease (WP 0794, Item 22)
Wire tags (WP 0794, Item 33)
Rivet - (2) (WP 0796, Item 156)

References
TM 9-2355-106-10
TM 9-2355-106-23P
WP 0786
WP 0782

Equipment Condition
Parking brake set (TM 9-2355-106-10)
Transmission set in NEUTRAL (N) (TM 9-2355-106-10)
Engine off (TM 9-2355-106-10)
MAIN POWER switch off (TM 9-2355-106-10)
Wheels chocked (TM 9-2355-106-10)
Engine hood open and secured (TM 9-2355-106-10)
Battery cables disconnected (WP 0404)

WARNING

Use extreme caution when testing or working on or around electrical circuits. Always assume that electrical circuits are live. Electrical shock can occur upon contact with voltage high enough to cause current flow through muscles or nerves. On Direct Current (DC) systems, generally 1 milliamp of current can be felt, 5 milliamps can cause severe pain, 15 milliamps can cause loss of muscle control, and 70 milliamps can be fatal. Wear protective clothing; ensure skin, clothing, and surrounding areas are dry; do not wear jewelry; and touch only the insulated, nonmetallic parts of electrical components and testing equipment. To prevent electrical arcing, avoid shorting electrical test probes and jumper wires. Electrical arcing can cause bright flashes of light, capable of causing temporary blindness. If electrical injury occurs, immediately shut off power supply and seek medical assistance. Failure to comply may result in serious injury or death to personnel.

Turn off ignition switch and MAIN POWER switch before performing electrical system maintenance. Failure to comply may result in serious injury or death to personnel.

Engine hood is extremely heavy and requires two-person lift. Ensure that there is adequate space in front of the vehicle to open hood completely without pinning or pinching personnel between hood and any other structure. Use extreme care when working under hood and make sure it is properly supported. Failure to comply may result in serious injury or death to personnel.

NOTE

Label all wires before removal.

12V UNDERHOOD MEGAFUSE AND HOLDER REMOVAL AND INSTALLATION - (CONTINUED)

REMOVAL

1. Lift cable cover (Figure 1, Item 2) to expose fuse (Figure 1, Item 6) and holder (Figure 1, Item 3).

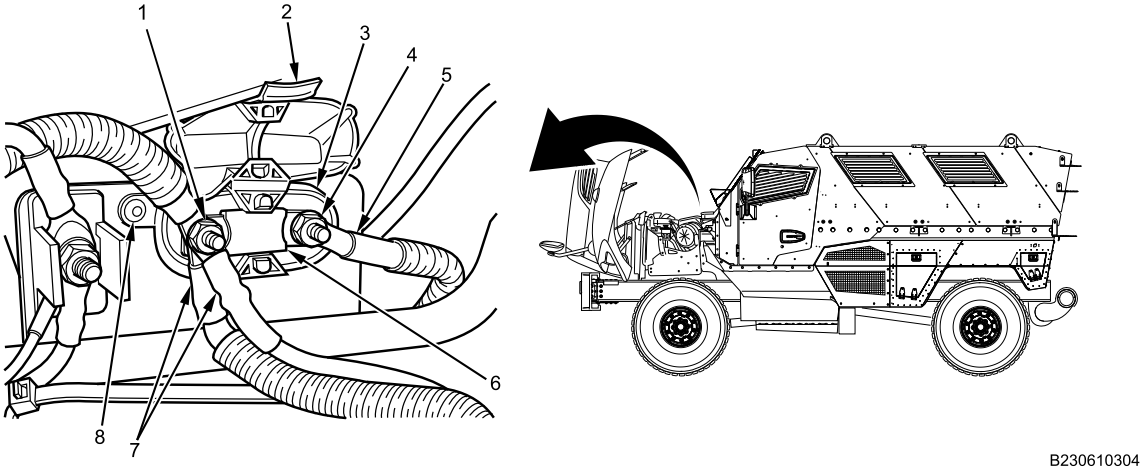

Figure 1. Underhood Fuse Holder Removal.

2. Remove nuts (Figure 1, Item 1 and 4) securing cables (Figure 1, Item 5 and 7) to underhood fuse holder (Figure 1, Item 3). Set cables aside.
3. Remove fuse (Figure 1, Item 6) from fuse holder (Figure 1, Item 3).
4. Drill out two rivets (Figure 1, Item 8) securing fuse holder (Figure 1, Item 3) to body. Discard rivets (Figure 1, Item 8).
5. Remove fuse holder (Figure 1, Item 3).

END OF TASK

TEST AND INSPECTION

NOTE

Multimeter will read OL for a faulty fuse.

1. With fuse removed, measure resistance between both terminals (Figure 2, Item 1 and 2) of fuse with multimeter.

12V UNDERHOOD MEGAFUSE AND HOLDER REMOVAL AND INSTALLATION - (CONTINUED)

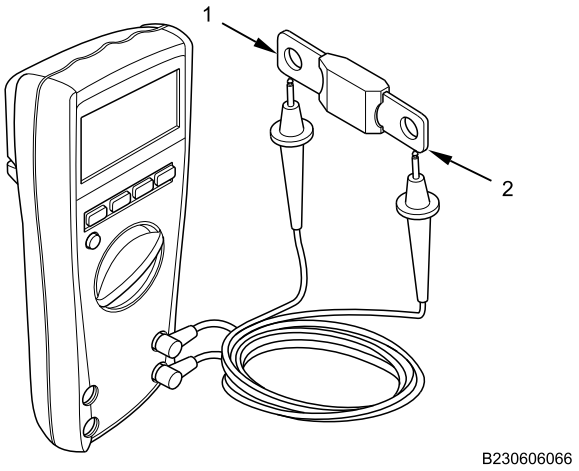

Figure 2. Testing for Faulty Fuse.

END OF TASK

12V UNDERHOOD MEGAFUSE AND HOLDER REMOVAL AND INSTALLATION - (CONTINUED)

INSTALLATION

WARNING

Do not use a circuit breaker, fuse, or relay with higher amperage rating than listed for a particular application. Using higher amperage will overheat the electrical circuit, causing melted components and possible fire. Failure to comply may result in damage to equipment and serious injury or death to personnel.

Dielectric grease is harmful to skin and eyes. If grease contacts eyes, rinse thoroughly and contact physician if irritation persists. If skin is contacted, wash thoroughly with soap and water. Failure to comply may result in serious injury to personnel.

NOTE

Apply dielectric grease to all connections.

1. Install underhood fuse holder (Figure 3, Item 3) with two rivets (Figure 3, Item 8).

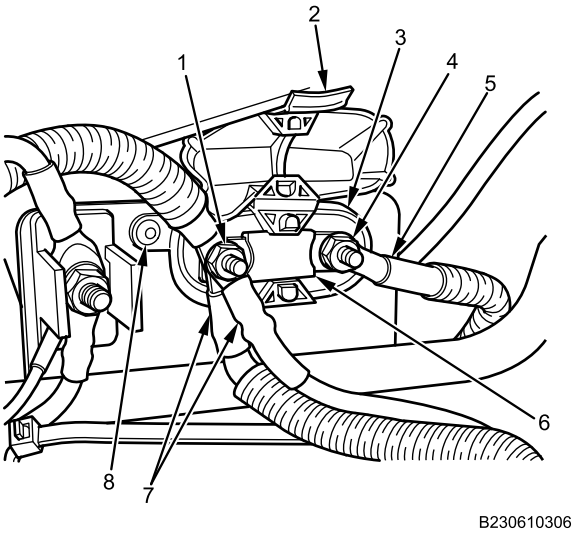

Figure 3. Underhood Fuse Holder Installation.

2. Install fuse (Figure 3, Item 6) on fuse holder (Figure 3, Item 3).
3. Install cables (Figure 3, Item 5 and 7) on underhood fuse holder (Figure 3, Item 3) with two nuts (Figure 3, Item 1 and 4). Tighten securely.
4. Close cable cover (Figure 3, Item 2).

END OF TASK

FOLLOW-ON MAINTENANCE

1. Connect battery cables (WP 0404).
2. Close engine hood (TM 9-2355-106-10).

12V UNDERHOOD MEGAFUSE AND HOLDER REMOVAL AND INSTALLATION - (CONTINUED)

3. Turn MAIN POWER switch on (TM 9-2355-106-10).
4. Verify operation (TM 9-2355-106-10).
5. Turn MAIN POWER switch off (TM 9-2355-106-10).
6. Remove wheel chocks (TM 9-2355-106-10).

END OF TASK

END OF WORK PACKAGE

FIELD MAINTENANCE

24V UNDERHOOD JUNCTION BLOCK REMOVAL AND INSTALLATION

INITIAL SETUP:

Tools and Special Tools
General Mechanic's Tool Kit (GMTK)
(WP 0795, Item 37)
Wrench, torque, 40-200 lb-in., 3/8-inch drive
(WP 0795, Item 142)
Bit, drill, standard, cobalt, jobber length, 3/16-inch
(WP 0795, Item 18)
Blind Rivet Tool Kit (WP 0795, Item 19)
Drill, hand, VSR, electric, 3/8-inch (WP 0795, Item 29)

Materials/Parts
Grease (WP 0794, Item 22)
Wire tags (WP 0794, Item 33)
Rivet - (2) (WP 0796, Item 103)

References
TM 9-2355-106-10
TM 9-2355-106-23P
WP 0782

Equipment Condition
Parking brake set (TM 9-2355-106-10)
Transmission set in NEUTRAL (N) (TM 9-2355-106-10)
Engine off (TM 9-2355-106-10)
MAIN POWER switch off (TM 9-2355-106-10)
Wheels chocked (TM 9-2355-106-10)
Engine hood open and secure (TM 9-2355-106-10)
Battery cables disconnected (WP 0404)

WARNING

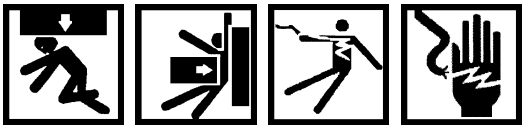

Engine hood is extremely heavy and requires two-person lift. Ensure that there is adequate space in front of the vehicle to open hood completely without pinning or pinching personnel between hood and any other structure. Use extreme care when working under hood and make sure it is properly supported. Failure to comply may result in serious injury or death to personnel.

Use extreme caution when testing or working on or around electrical circuits. Always assume that electrical circuits are live. Electrical shock can occur upon contact with voltage high enough to cause current flow through muscles or nerves. On Direct Current (DC) systems, generally 1 milliamp of current can be felt, 5 milliamps can cause severe pain, 15 milliamps can cause loss of muscle control, and 70 milliamps can be fatal. Wear protective clothing; ensure skin, clothing, and surrounding areas are dry; do not wear jewelry; and touch only the insulated, nonmetallic parts of electrical components and testing equipment. To prevent electrical arcing, avoid shorting electrical test probes and jumper wires. Electrical arcing can cause bright flashes of light, capable of causing temporary blindness. If electrical injury occurs, immediately shut off power supply and seek medical assistance. Failure to comply may result in serious injury or death to personnel.

24V UNDERHOOD JUNCTION BLOCK REMOVAL AND INSTALLATION - (CONTINUED)

REMOVAL

NOTE

Mark and tag all wires prior to removal to aid installation.

1. Remove 24V underhood junction block nut (Figure 1, Item 1) from 24V underhood junction block (Figure 1, Item 2).

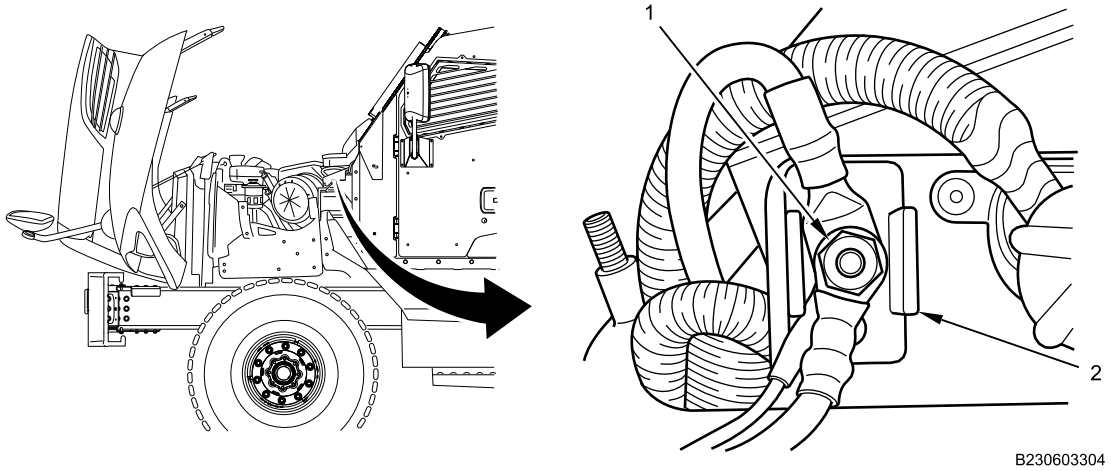

Figure 1. Electrical Harness Connections.

2. Drill out two rivets (Figure 2, Item 1 and 4) securing 24V junction block (Figure 2, Item 2) to air cleaner support (Figure 2, Item 3).

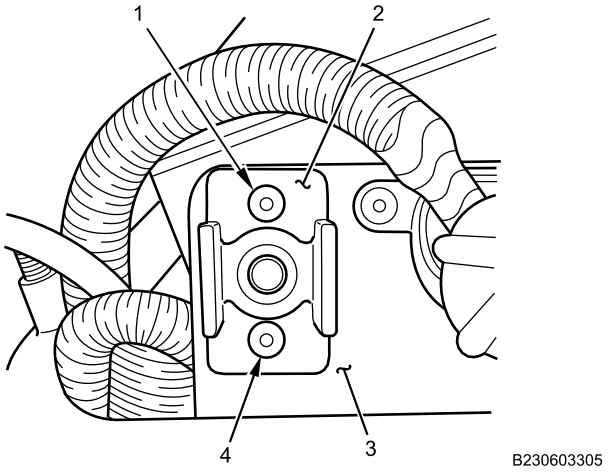

Figure 2. 24V Underhood Junction Block Removal.

3. Remove junction block (Figure 2, Item 2) from air cleaner support (Figure 2, Item 3).

END OF TASK

24V UNDERHOOD JUNCTION BLOCK REMOVAL AND INSTALLATION - (CONTINUED)

INSTALLATION

WARNING

Dielectric grease is harmful to skin and eyes. If grease contacts eyes, rinse thoroughly and contact physician if irritation persists. If skin is contacted, wash thoroughly with soap and water. Failure to comply may result in serious injury to personnel.

1. Position 24V underhood junction block (Figure 3, Item 2) on air cleaner support (Figure 3, Item 3) and secure with two new rivets (Figure 3, Item 1 and 4).

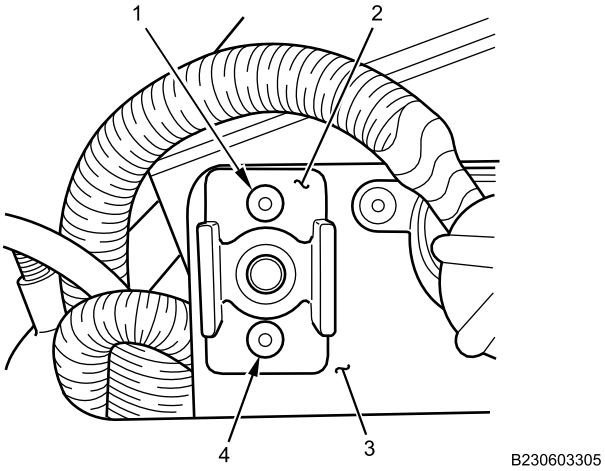

Figure 3. 24V Underhood Junction Block Installation.

2. Apply dielectric grease to 24V underhood junction block (Figure 3, Item 2) stud.

24V UNDERHOOD JUNCTION BLOCK REMOVAL AND INSTALLATION - (CONTINUED)

3. Apply dielectric grease to 24V underhood junction block electrical harness connections (Figure 4, Item 1, 4, and 5).

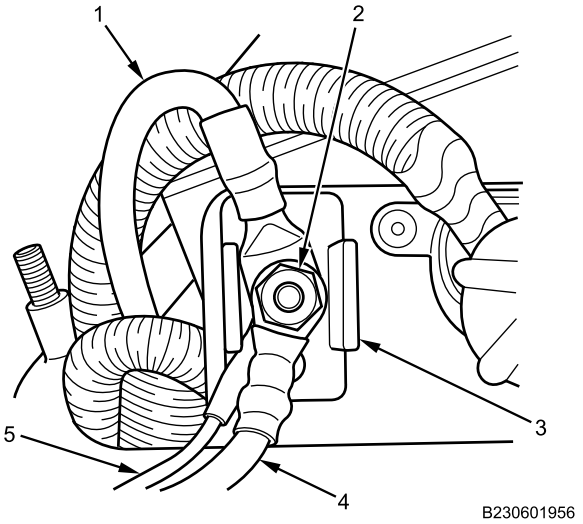

Figure 4. Electrical Harness Connections.

4. Install underhood junction block electrical harness connections (Figure 4, Item 1, 4, and 5) on 24V underhood junction block (Figure 4, Item 3).
5. Install 24V underhood junction block nut (Figure 4, Item 2) on 24V underhood junction block (Figure 4, Item 3) and torque to 155-190 lb-in. (18-22 N•m).

END OF TASK

FOLLOW-ON MAINTENANCE

1. Connect battery cables (WP 0404).
2. Close engine hood (TM 9-2355-106-10).
3. Remove wheel chocks (TM 9-2355-106-10).
4. Turn MAIN POWER switch on (TM 9-2355-106-10).
5. Test-drive vehicle to verify electrical operation of all circuits (TM 9-2355-106-10).
6. Set transmission in NEUTRAL (N) (TM 9-2355-106-10).
7. Set parking brake (TM 9-2355-106-10).
8. Turn engine off (TM 9-2355-106-10).
9. Turn MAIN POWER switch off (TM 9-2355-106-10).

END OF TASK

END OF WORK PACKAGE

FIELD MAINTENANCE

FORWARD CHASSIS WIRING HARNESS REMOVAL AND INSTALLATION

INITIAL SETUP:

Tools and Special Tools
General Mechanic's Tool Kit (GMTK) (WP 0795, Item 37)

Materials/Parts
Grease (WP 0794, Item 22)
Cable lock straps - (6) (WP 0796, Item 120)
Cable lock straps - (3) (WP 0796, Item 121)
Cable lock straps - (32) (WP 0796, Item 124)

References
TM 9-2355-106-10
TM 9-2355-106-23P
WP 0782

Equipment Condition
Parking brake set (TM 9-2355-106-10)
Transmission set in NEUTRAL (N) (TM 9-2355-106-10)
Engine off (TM 9-2355-106-10)
MAIN POWER switch off (TM 9-2355-106-10)
Wheels chocked (TM 9-2355-106-10)
Engine hood open and secured (TM 9-2355-106-10)
Left engine armor plate bracket removed (WP 0598)
Air cleaner assembly removed (WP 0257)

WARNING

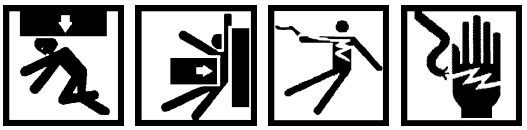

Engine hood is extremely heavy and requires two-person lift. Ensure that there is adequate space in front of the vehicle to open hood completely without pinning or pinching personnel between hood and any other structure. Use extreme care when working under hood and make sure it is properly supported. Failure to comply may result in serious injury or death to personnel.

Use extreme caution when testing or working on or around electrical circuits. Always assume that electrical circuits are live. Electrical shock can occur upon contact with voltage high enough to cause current flow through muscles or nerves. On Direct Current (DC) systems, generally 1 milliamp of current can be felt, 5 milliamps can cause severe pain, 15 milliamps can cause loss of muscle control, and 70 milliamps can be fatal. Wear protective clothing; ensure skin, clothing, and surrounding areas are dry; do not wear jewelry; and touch only the insulated, nonmetallic parts of electrical components and testing equipment. To prevent electrical arcing, avoid shorting electrical test probes and jumper wires. Electrical arcing can cause bright flashes of light, capable of causing temporary blindness. If electrical injury occurs, immediately shut off power supply and seek medical assistance. Failure to comply may result in serious injury or death to personnel.

FORWARD CHASSIS WIRING HARNESS REMOVAL AND INSTALLATION - (CONTINUED)

REMOVAL

1. Disconnect seven-pin connector (Figure 1, Item 1).

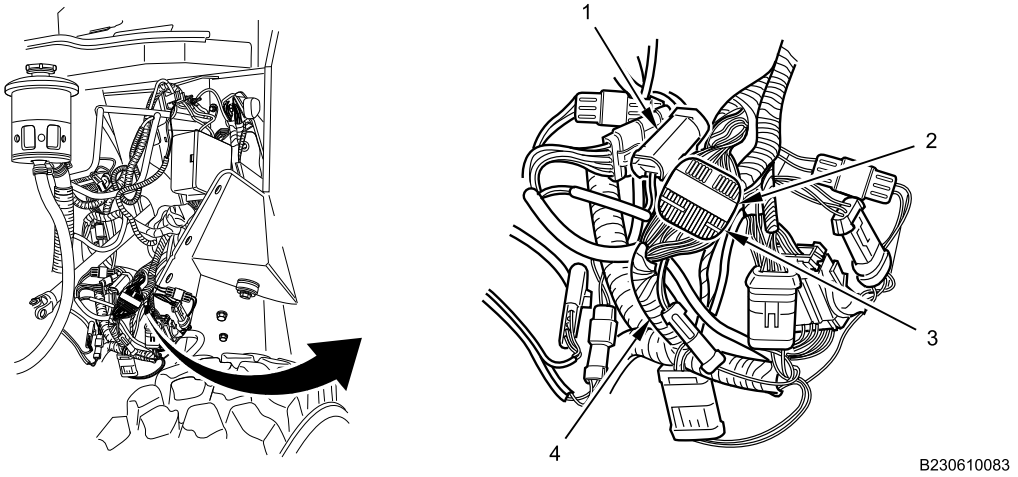

Figure 1. Forward Chassis Harness Connectors Near Power Distribution Center (PDC).

2. Pull locking tab (Figure 1, Item 2) outward to disconnect 24-pin connector (Figure 1, Item 3) of forward chassis harness (Figure 1, Item 4).
3. Remove and discard two cable lock straps (Figure 2, Item 1 and 2) from left ABS modulator.

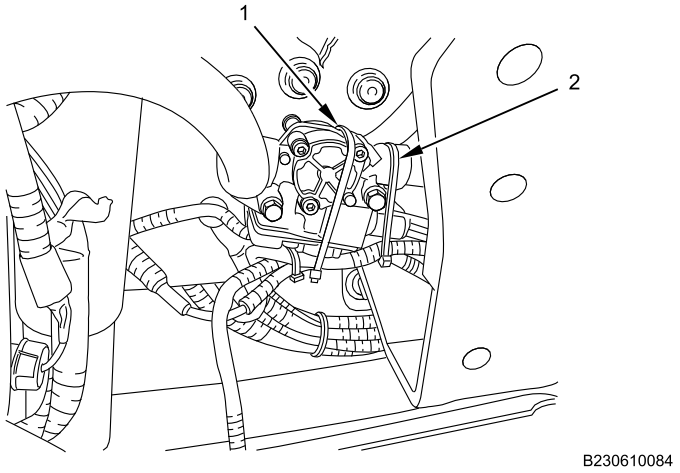

Figure 2. Left ABS Modulator Cable Lock Straps.

FORWARD CHASSIS WIRING HARNESS REMOVAL AND INSTALLATION - (CONTINUED)

4. Disconnect three-pin connector (Figure 3, Item 2) from left ABS modulator (Figure 3, Item 1).

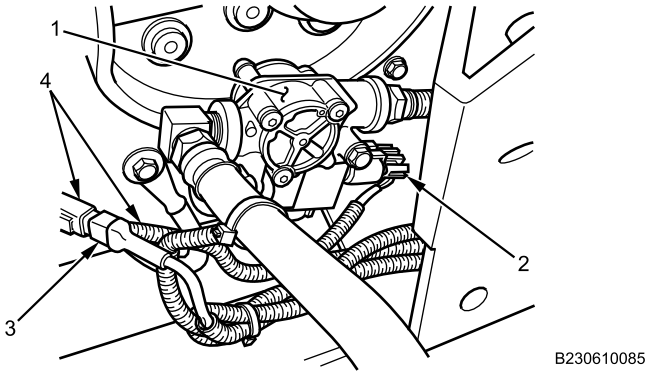

Figure 3. Left ABS Modulator Connections.

5. Disconnect two-pin connector (Figure 3, Item 3) from forward chassis harness (Figure 3, Item 4).
6. Remove and discard six cable lock straps (Figure 4, Item 1, 3, 4, 6, 7 and 8) from forward chassis harness (Figure 4, Item 2).

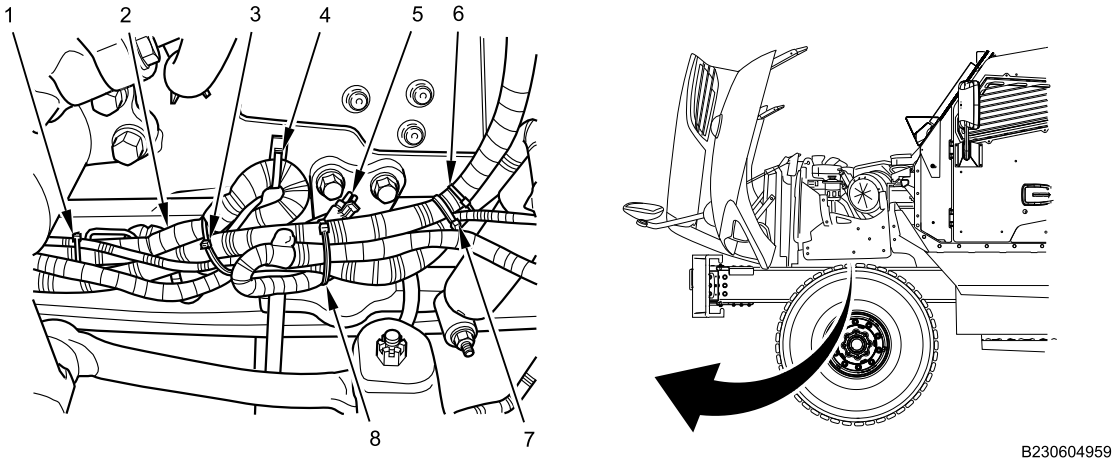

Figure 4. Behind Steering Gear.

7. Separate ether start two-pin connector (Figure 4, Item 5) from surrounding harnesses.

FORWARD CHASSIS WIRING HARNESS REMOVAL AND INSTALLATION - (CONTINUED)

8. Remove and discard four cable lock straps (Figure 5, Item 1, 3, 4 and 5) fastening forward chassis harness (Figure 5, Item 2) together.

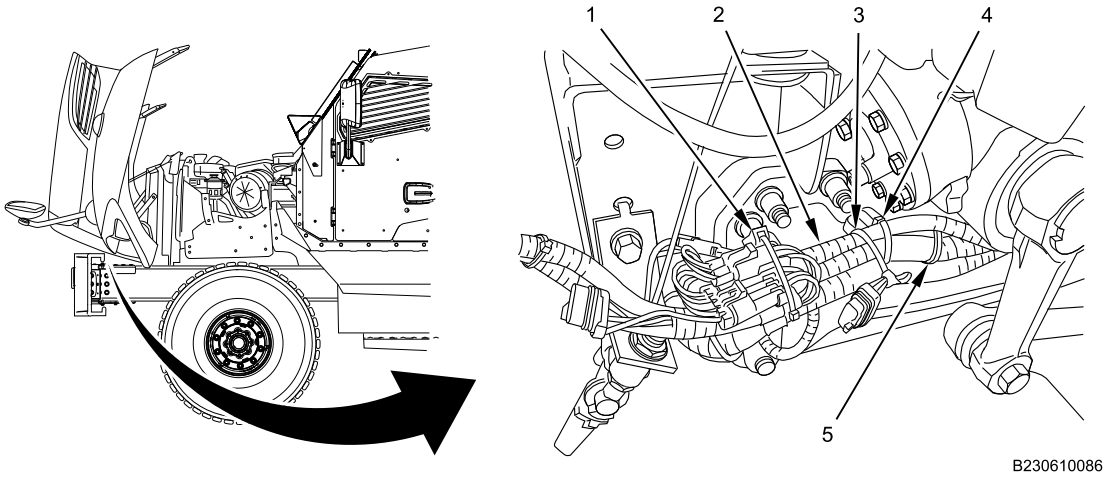

Figure 5. Front Bumper Left Harness Cable Lock Straps.

9. Disconnect one-pin connector (Figure 6, Item 3) from forward chassis harness (Figure 6, Item 2) to radiator ground.

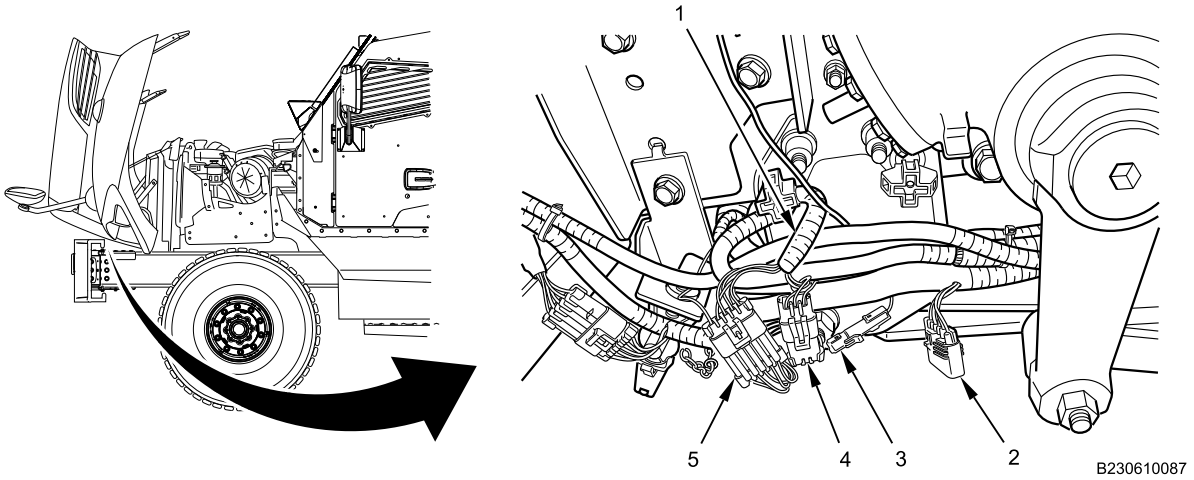

Figure 6. Front Bumper Left Harness Connections.

10. Disconnect three-pin connector (Figure 6, Item 4) and five-pin connector (Figure 6, Item 5).
11. Separate ground adapter #1 (Figure 6, Item 1) and surrounding harnesses.

FORWARD CHASSIS WIRING HARNESS REMOVAL AND INSTALLATION - (CONTINUED)

12. Remove and discard six cable lock straps (Figure 7, Item 4, 5, 6, 7 and 8) fastening forward chassis harness (Figure 7, Item 1) together.

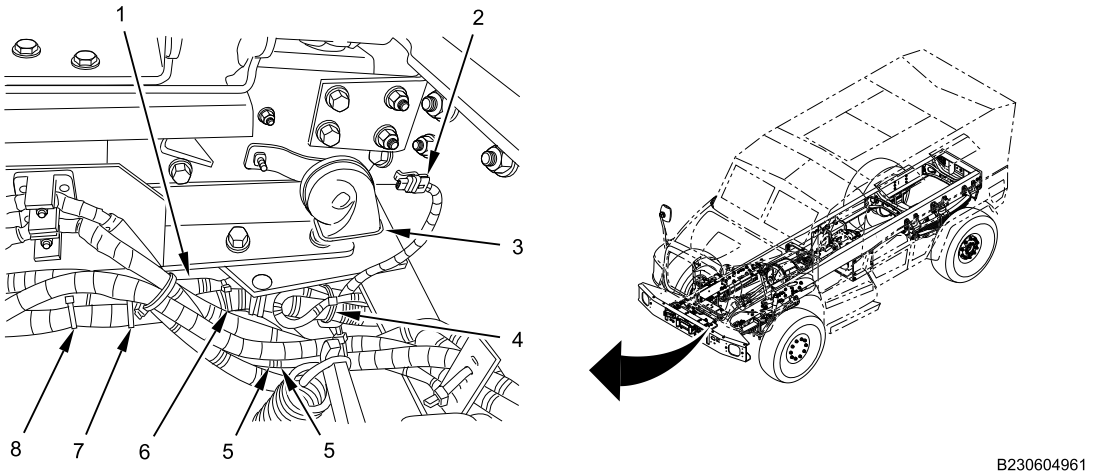

Figure 7. Left Horn.

13. Disconnect connector (Figure 7, Item 2) from left horn (Figure 7, Item 3).
14. Remove and discard four cable lock straps (Figure 8, Item 5, 6, 7 and 8) fastening forward chassis harness (Figure 8, Item 4) together.

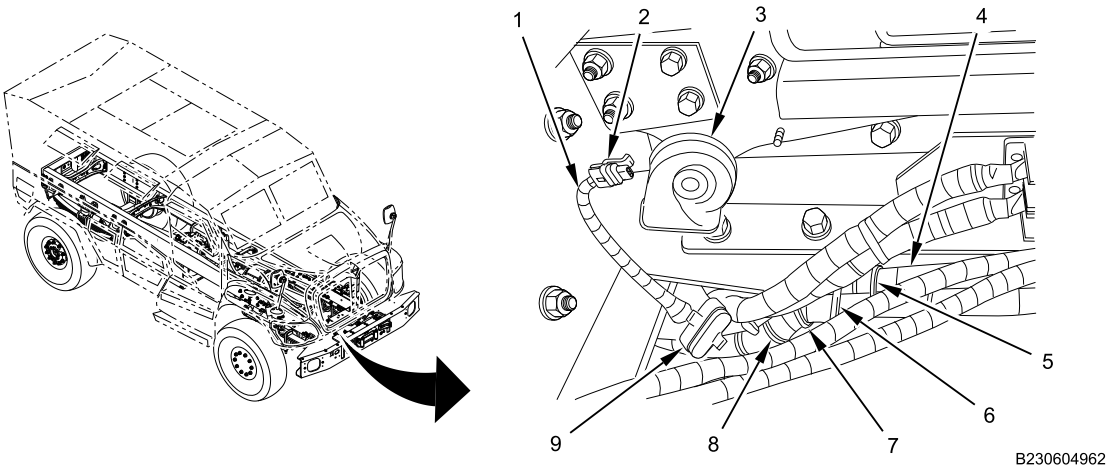

Figure 8. Right Horn.

15. Disconnect connector (Figure 8, Item 2) of harness (Figure 8, Item 1) from right horn (Figure 8, Item 3).
16. Separate ground adapter #2 (Figure 8, Item 9) from surrounding harnesses.

FORWARD CHASSIS WIRING HARNESS REMOVAL AND INSTALLATION - (CONTINUED)

17. Remove and discard 10 cable lock straps (Figure 9, Item 1 through 10) fastening forward chassis harness (Figure 9, Item 11) together.

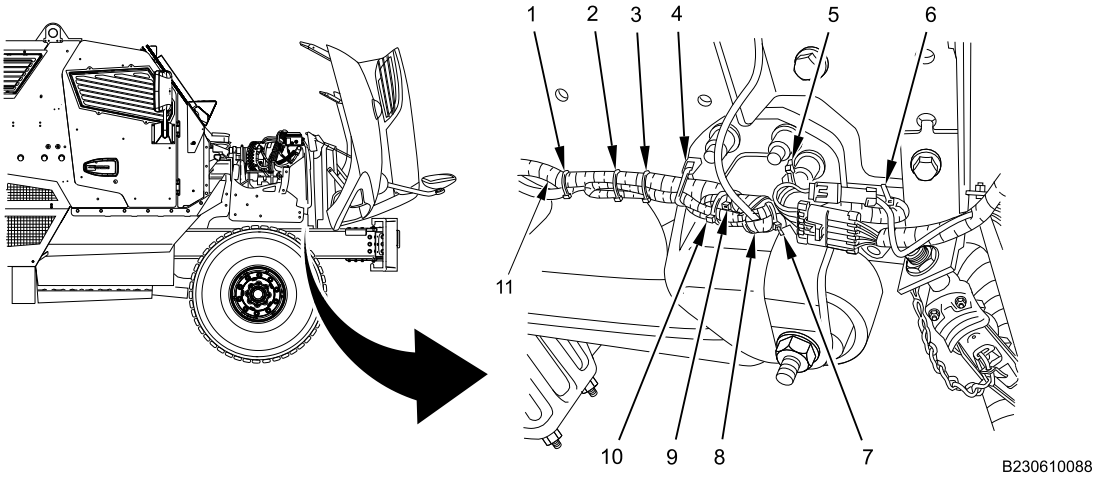

Figure 9. Front Bumper Right Harness Cable Lock Straps.

18. Disconnect one-pin connector (Figure 10, Item 2) and disconnect five-pin connector (Figure 10, Item 1).

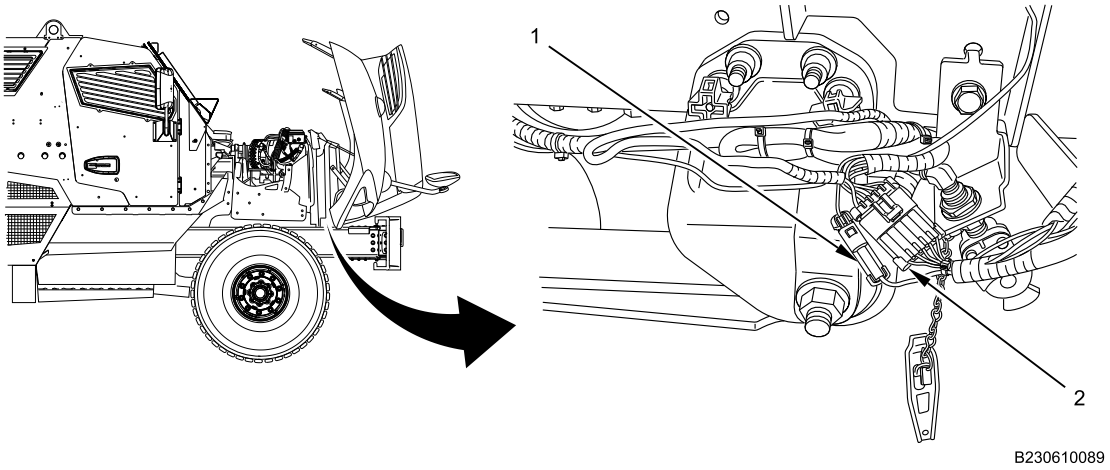

Figure 10. Front Bumper Right Harness Connections.

FORWARD CHASSIS WIRING HARNESS REMOVAL AND INSTALLATION - (CONTINUED)

19. Remove and discard five cable lock straps (Figure 11, Item 1, 2, 6, 7 and 8) fastening forward chassis harness (Figure 11, Item 9) together.

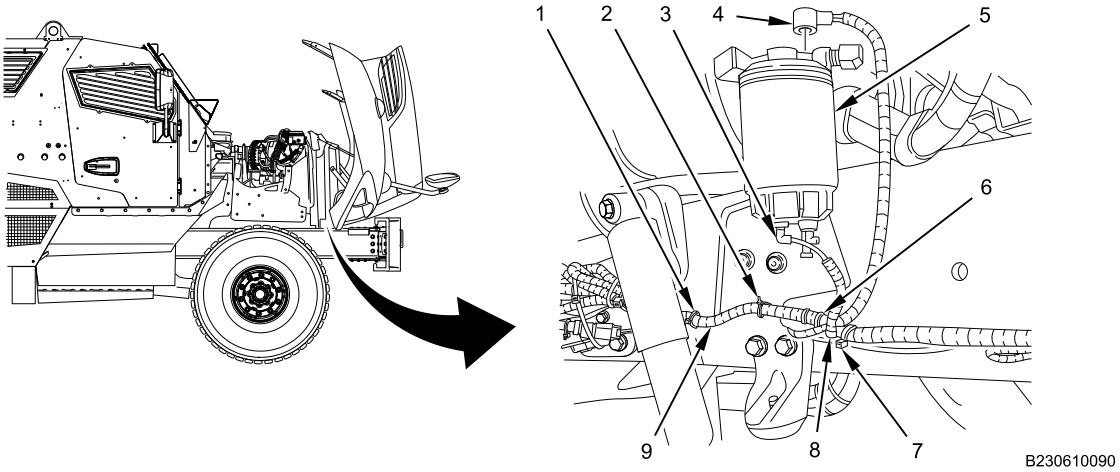

Figure 11. Right Outboard Frame Rail.

20. Disconnect fuel heater connector (Figure 11, Item 4) and water probe connector (Figure 11, Item 3) from fuel filter assembly (Figure 11, Item 5).
21. Remove and discard four cable lock straps (Figure 12, Item 1, 2, 3 and 5) fastening forward chassis harness (Figure 12, Item 4) together.

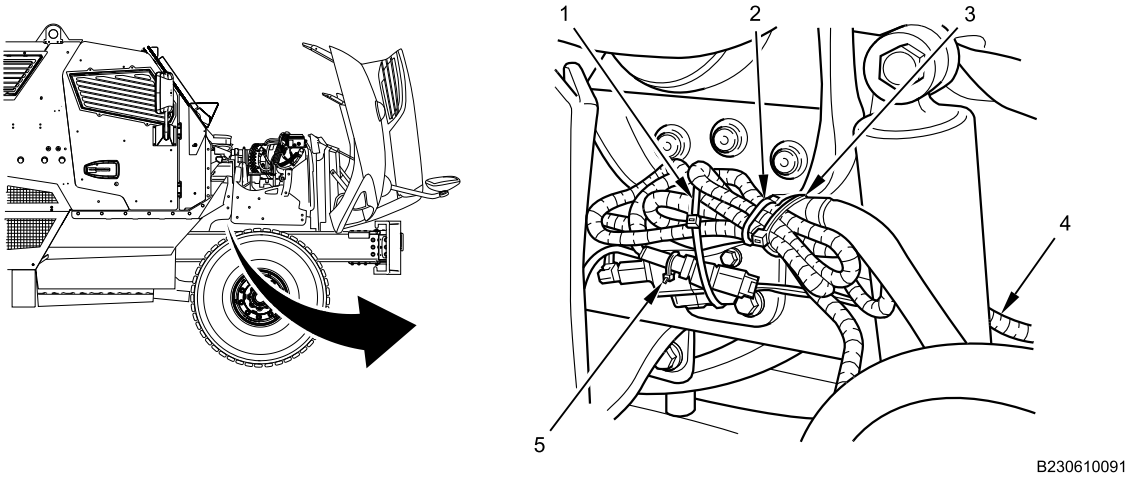

Figure 12. Right ABS Modulator Cable Lock Straps.

FORWARD CHASSIS WIRING HARNESS REMOVAL AND INSTALLATION - (CONTINUED)

22. Disconnect three-pin connector (Figure 13, Item 4) from right ABS modulator (Figure 13, Item 3).

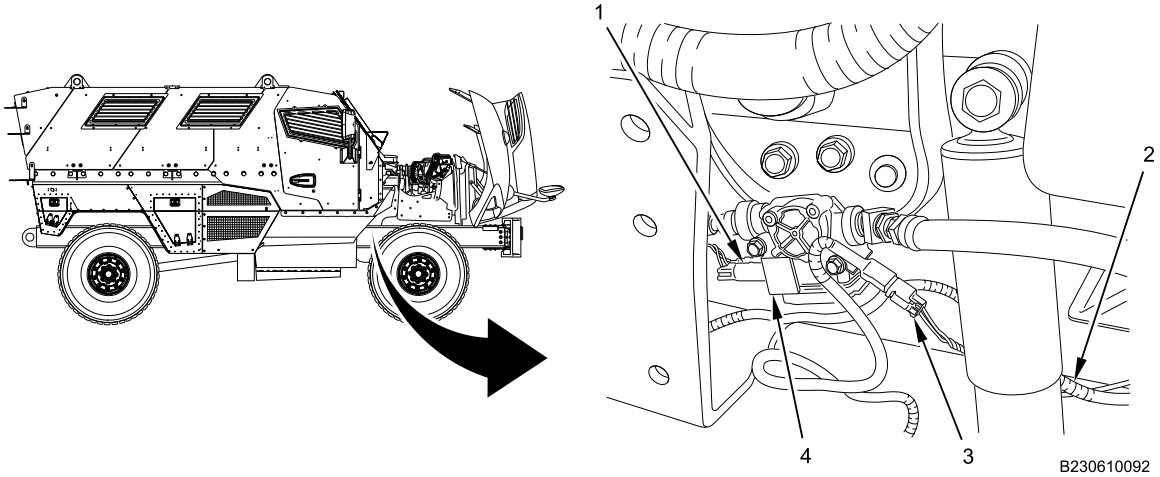

Figure 13. Right ABS Modulator Connections.

23. Disconnect two-pin connector (Figure 13, Item 2) from forward chassis harness (Figure 13, Item 1).
24. From behind left side of front bumper, pull forward chassis harness assembly to remove harness assembly from vehicle.

END OF TASK

FORWARD CHASSIS WIRING HARNESS REMOVAL AND INSTALLATION - (CONTINUED)

INSTALLATION

WARNING

Dielectric grease is harmful to skin and eyes. If grease contacts eyes, rinse thoroughly and contact physician if irritation persists. If skin is contacted, wash thoroughly with soap and water. Failure to comply may result in serious injury to personnel.

NOTE

Apply dielectric grease to all electrical contacts before installation.

1. From behind left side of front bumper, feed forward chassis harness assembly past the horns and to the right side frame rail behind the right side of the front bumper.
2. Connect three-pin connector (Figure 14, Item 4) to right ABS modulator (Figure 14, Item 3).

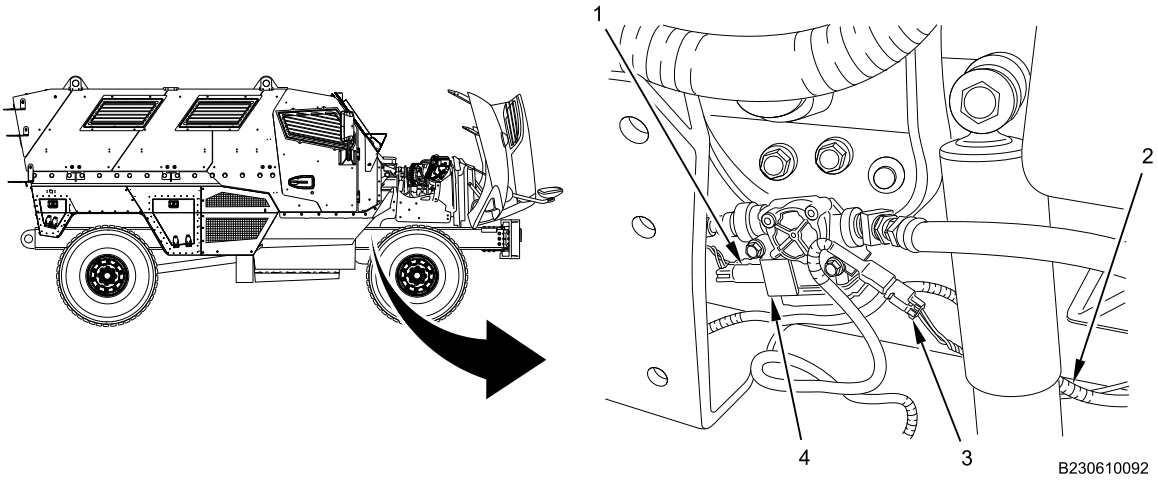

Figure 14. Right ABS Modulator Connections.

3. Connect two-pin connector (Figure 14, Item 2) to forward chassis harness (Figure 14, Item 1).

FORWARD CHASSIS WIRING HARNESS REMOVAL AND INSTALLATION - (CONTINUED)

4. Install four new cable lock straps (Figure 15, Item 1, 2, 3 and 5) fastening forward chassis harness (Figure 15, Item 4) together.

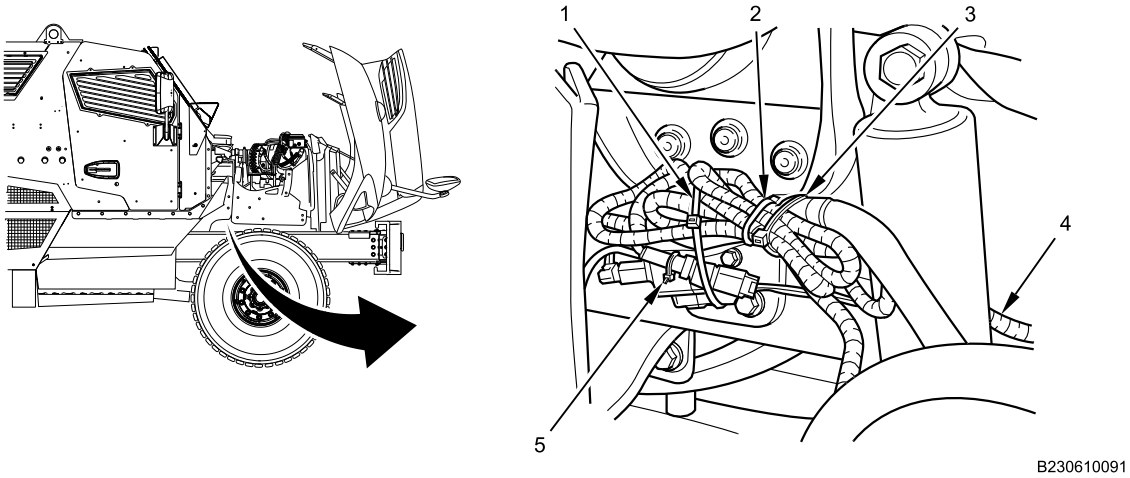

Figure 15. Right ABS Modulator Cable Lock Straps.

5. Connect fuel heater connector (Figure 16, Item 4) and water probe connector (Figure 16, Item 3) to fuel filter assembly (Figure 16, Item 5).

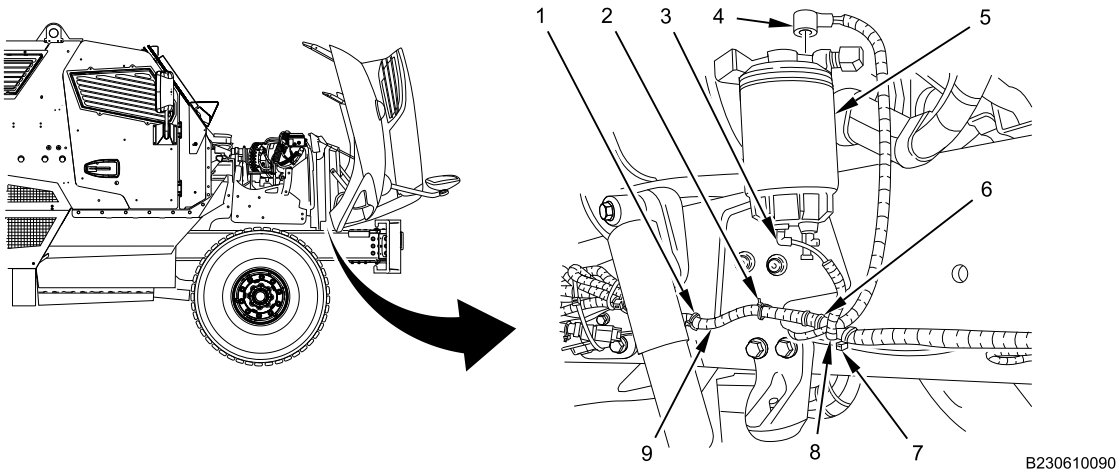

Figure 16. Right Outboard Frame Rail.

6. Install five new cable lock straps (Figure 16, Item 1, 2, 6, 7 and 8) fastening forward chassis harness (Figure 16, Item 9) together.

FORWARD CHASSIS WIRING HARNESS REMOVAL AND INSTALLATION - (CONTINUED)

7. Connect one-pin connector (Figure 17, Item 2) and connect five-pin connector (Figure 17, Item 1).

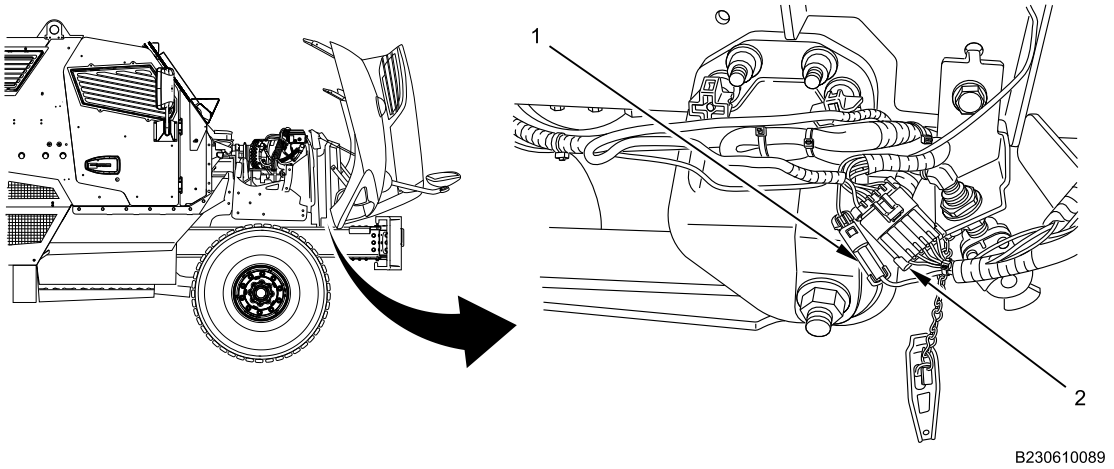

Figure 17. Front Bumper Right Harness Connections.

8. Install 10 new cable lock straps (Figure 18, Item 1 through 10) fastening forward chassis harness (Figure 18, Item 11) together.

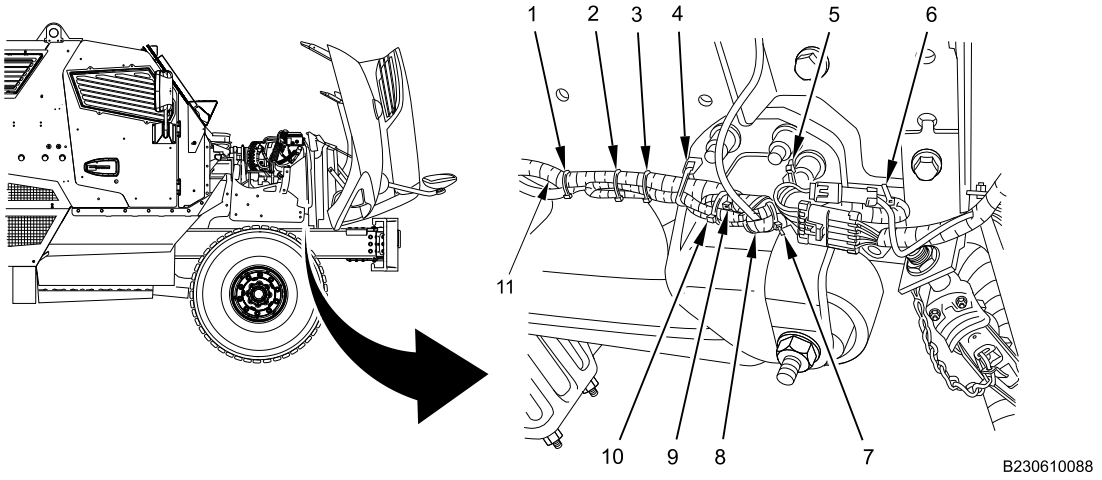

Figure 18. Front Bumper Right Harness Cable Lock Straps.

FORWARD CHASSIS WIRING HARNESS REMOVAL AND INSTALLATION - (CONTINUED)

9. Connect connector (Figure 19, Item 2) of harness (Figure 19, Item 1) to right horn (Figure 19, Item 3).

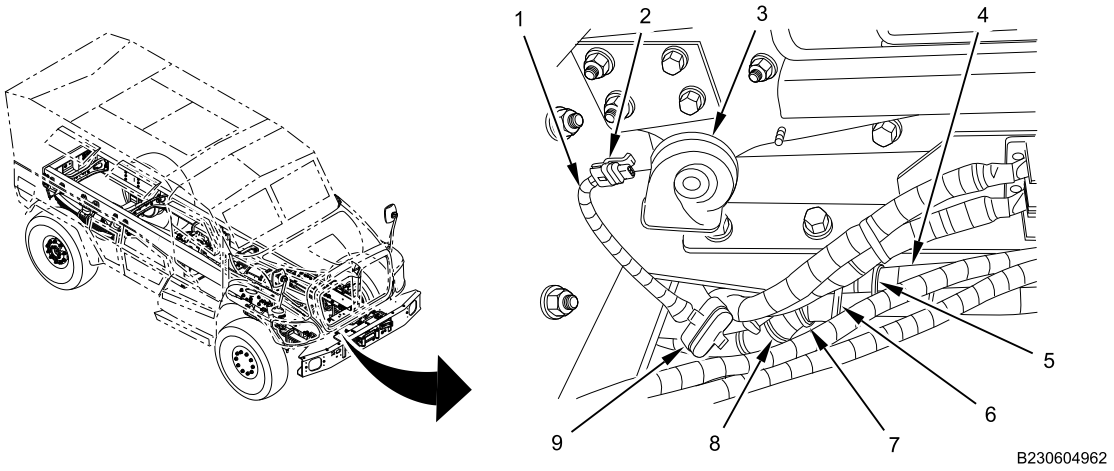

Figure 19. Right Horn.

10. Position and install ground adapter #2 (Figure 19, Item 9) away from frame or components to prevent abrasion.
11. Install four new cable lock straps (Figure 19, Item 5, 6, 7 and 8) fastening forward chassis harness (Figure 19, Item 4) together.
12. Connect connector (Figure 20, Item 2) to left horn (Figure 20, Item 3).

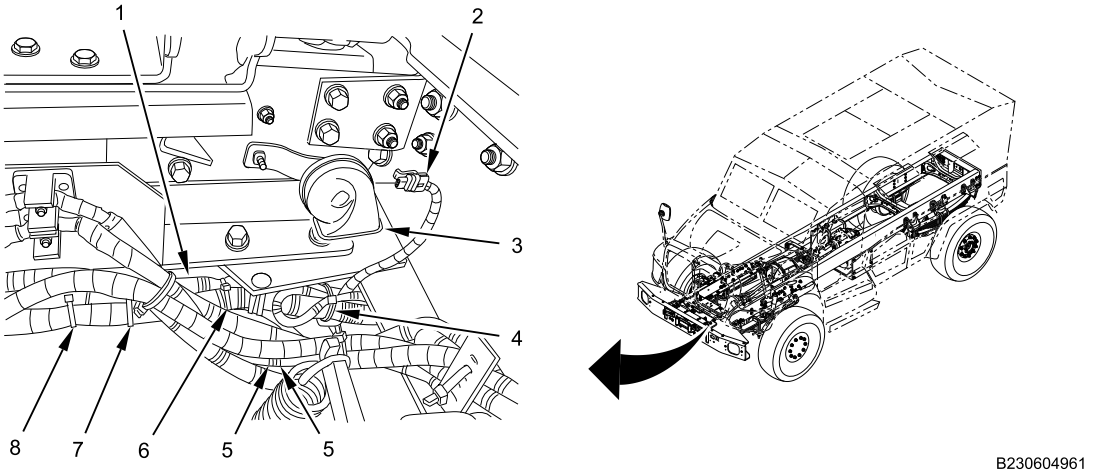

Figure 20. Left Horn.

13. Install six new cable lock straps (Figure 20, Item 4, 5, 6, 7 and 8) fastening forward chassis harness (Figure 20, Item 1) together.

FORWARD CHASSIS WIRING HARNESS REMOVAL AND INSTALLATION - (CONTINUED)

14. Connect one-pin connector (Figure 21, Item 3) from forward chassis harness (Figure 21, Item 2) to radiator ground.

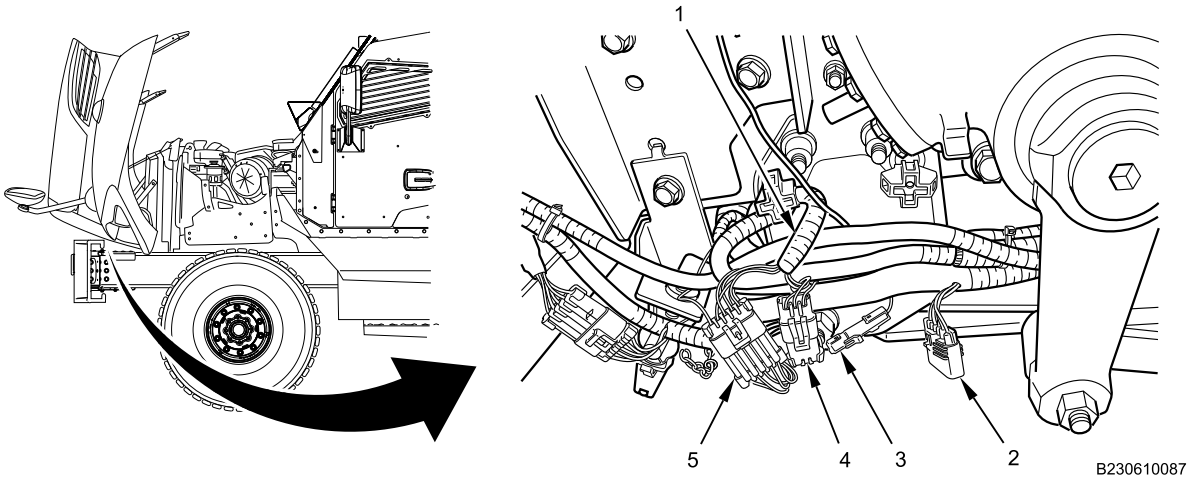

Figure 21. Front Bumper Left Harness Connections.

15. Connect three-pin connector (Figure 21, Item 4) and five-pin connector (Figure 21, Item 5).
16. Position and install ground adapter #1 (Figure 21, Item 1) away from frame or components to prevent abrasion.
17. Install four new cable lock straps (Figure 22, Item 1, 3, 4 and 5) fastening forward chassis harness (Figure 22, Item 2) together.

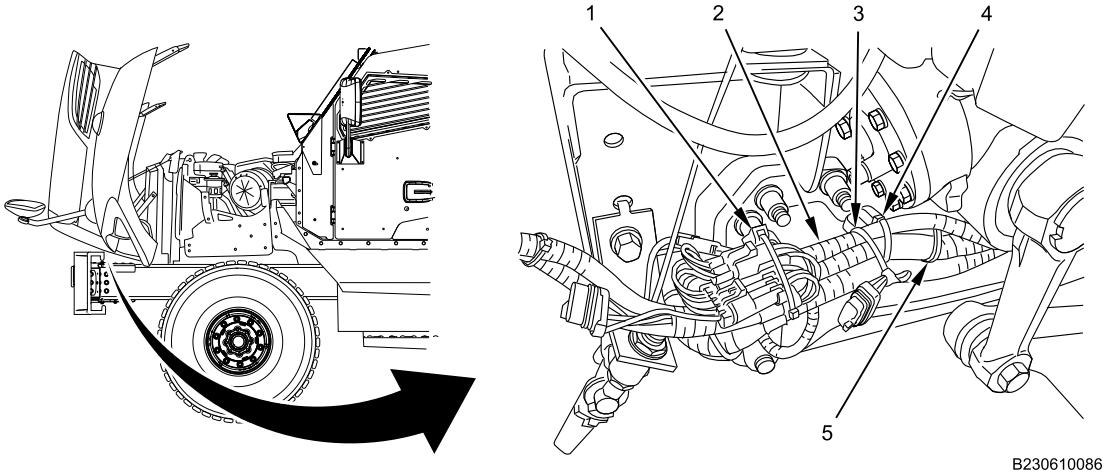

Figure 22. Front Bumper Left Harness Cable Lock Straps.

FORWARD CHASSIS WIRING HARNESS REMOVAL AND INSTALLATION - (CONTINUED)

18. Install six new cable lock straps (Figure 23, Item 1, 3, 4, 6, 7 and 8) fastening forward chassis harness (Figure 23, Item 2) together.

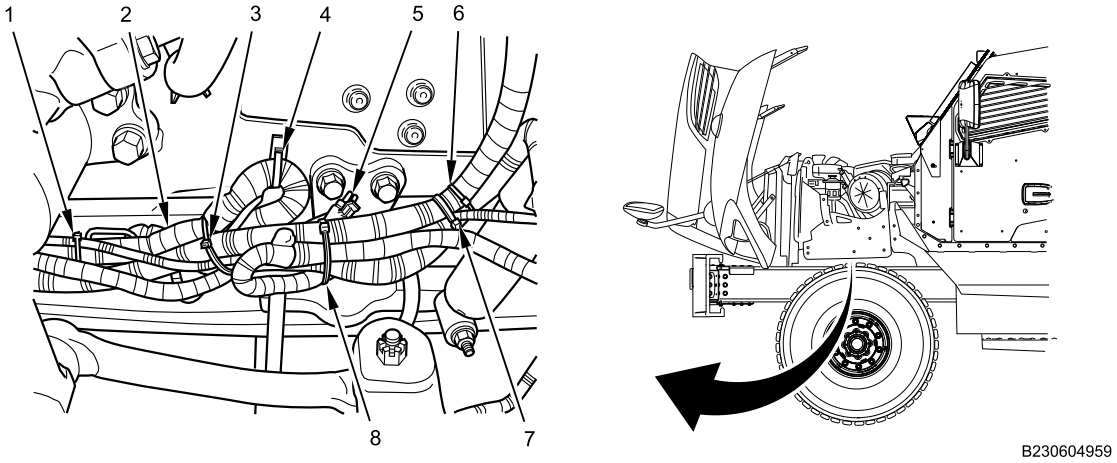

Figure 23. Behind Steering Gear.

19. Position and install ether start two-pin connector (Figure 23, Item 5) away from frame or components to prevent abrasion.
20. Connect three-pin connector (Figure 24, Item 2) to left ABS modulator (Figure 24, Item 1).

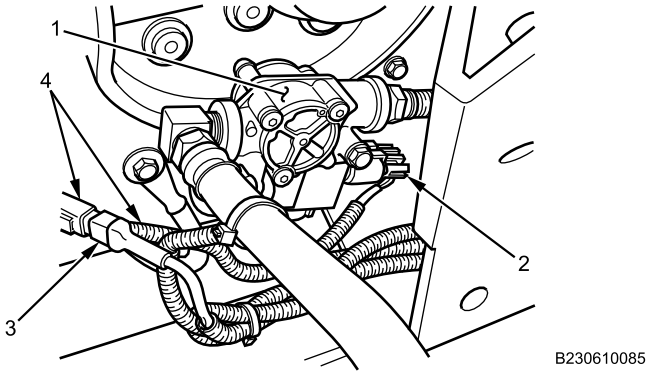

Figure 24. Left ABS Modulator Connections.

21. Connect two-pin connector (Figure 24, Item 3) to forward chassis harness (Figure 24, Item 4).

FORWARD CHASSIS WIRING HARNESS REMOVAL AND INSTALLATION - (CONTINUED)

22. Install two new cable lock straps (Figure 25, Item 1 and 2).

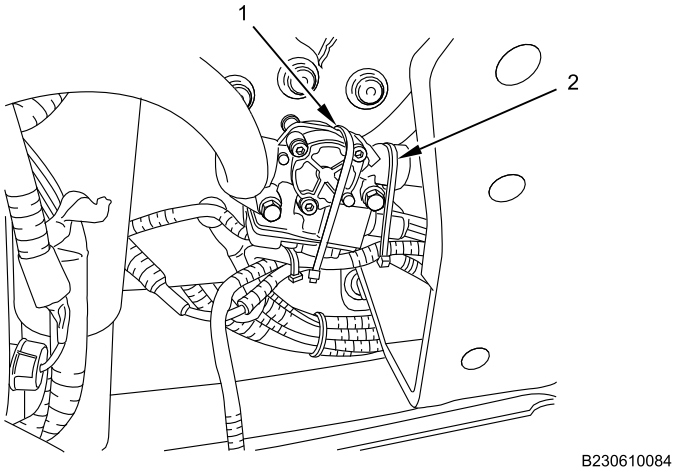

Figure 25. Left ABS Modulator Cable Lock Straps.

23. Connect seven-pin connector (Figure 26, Item 1).

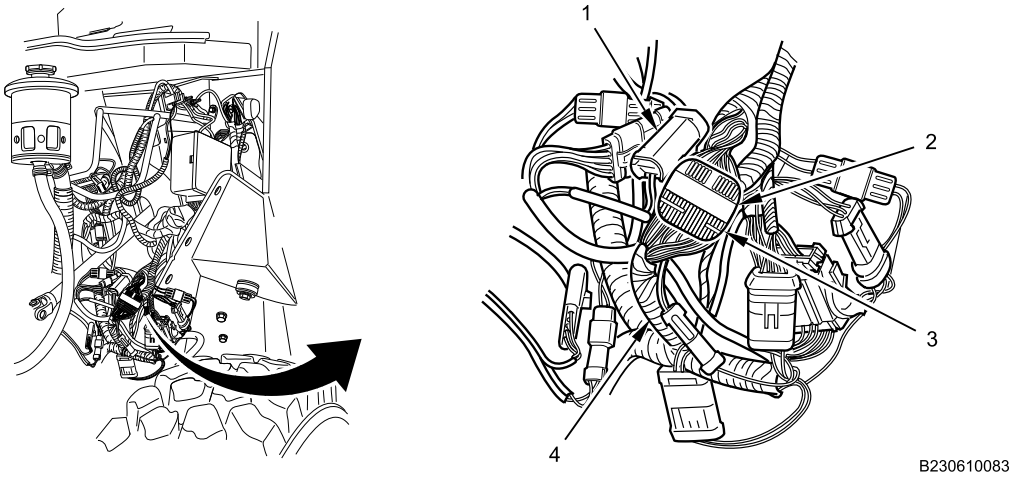

Figure 26. Forward Chassis Harness Connectors Near Power Distribution Center (PDC).

24. Press locking tab (Figure 26, Item 2) inward to connect 24-pin connector (Figure 26, Item 3) of forward chassis harness (Figure 26, Item 4).

END OF TASK

FORWARD CHASSIS WIRING HARNESS REMOVAL AND INSTALLATION - (CONTINUED)

FOLLOW-ON MAINTENANCE

1. Turn MAIN POWER switch on (TM 9-2355-106-10).
2. Verify light operation (TM 9-2355-106-10).
3. Turn MAIN POWER switch off (TM 9-2355-106-10).
4. Install air cleaner assembly (WP 0257).
5. Install left engine armor plate bracket (WP 0598).
6. Engine hood closed and secured (TM 9-2355-106-10).
7. Remove wheel chocks (TM 9-2355-106-10).

END OF TASK

END OF WORK PACKAGE

FIELD MAINTENANCE

FRONT ANTILOCK BRAKE SYSTEM (ABS) SENSOR REMOVAL AND INSTALLATION

INITIAL SETUP:

Tools and Special Tools
General Mechanic's Tool Kit (GMTK) (WP 0795, Item 37)

Materials/Parts
Clip (WP 0796, Item 118)
Cable, lock strap - (6) (WP 0796, Item 124)

References
TM 9-2355-106-10
TM 9-2355-106-23P
WP 0782

Equipment Condition
Parking brake set (TM 9-2355-106-10)
Transmission set in NEUTRAL (N) (TM 9-2355-106-10)
Engine off (TM 9-2355-106-10)
MAIN POWER switch off (TM 9-2355-106-10)
Wheels chocked (TM 9-2355-106-10)
Engine hood open and secured (TM 9-2355-106-10)

WARNING

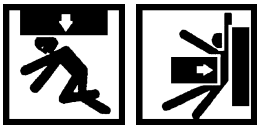

Engine hood is extremely heavy and requires two-person lift. Ensure that there is adequate space in front of the vehicle to open hood completely without pinning or pinching personnel between hood and any other structure. Use extreme care when working under hood and make sure it is properly supported. Failure to comply may result in serious injury or death to personnel.

NOTE

Note routing of ABS harness cable and location of cable lock straps prior to removal to aid in installation.

Right side shown, left side similar.

FRONT ANTILOCK BRAKE SYSTEM (ABS) SENSOR REMOVAL AND INSTALLATION - (CONTINUED)

REMOVAL

NOTE

Turn wheels left or right for ease of access to ABS sensor.

1. Using pliers, pull and twist to remove ABS sensor (Figure 1, Item 2) from steering knuckle cavity (Figure 1, Item 3).

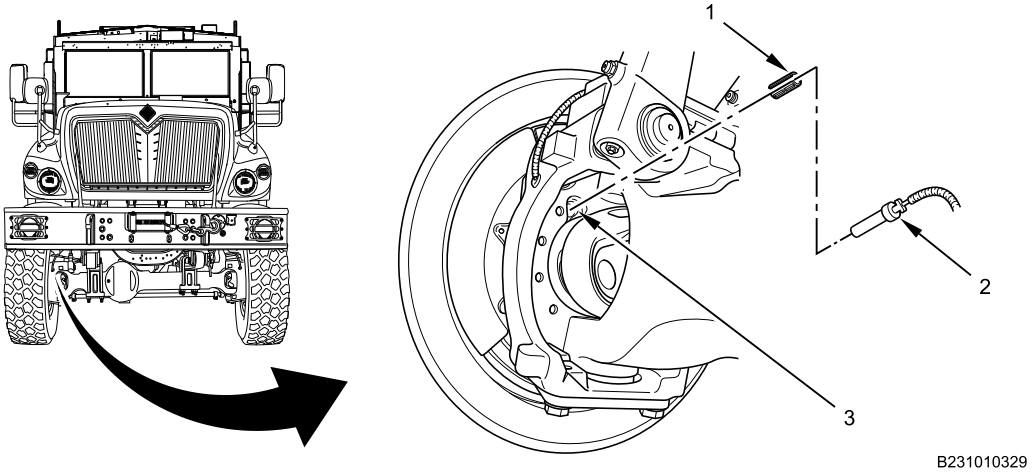

Figure 1. ABS Sensor.

2. Using pliers, pull to remove ABS sensor clip (Figure 1, Item 1) from steering knuckle cavity (Figure 1, Item 3). Discard ABS sensor clip.

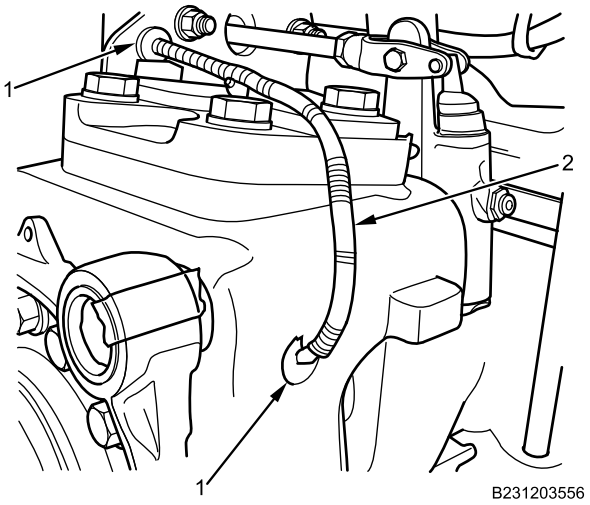

Figure 2. Sensor Harness.

3. Remove ABS sensor harness (Figure 2, Item 2) and grommets (Figure 2, Item 1).

FRONT ANTILOCK BRAKE SYSTEM (ABS) SENSOR REMOVAL AND INSTALLATION - (CONTINUED)

4. Remove and discard all cable lock straps (Figure 3, Item 1) from ABS harness (Figure 3, Item 3).

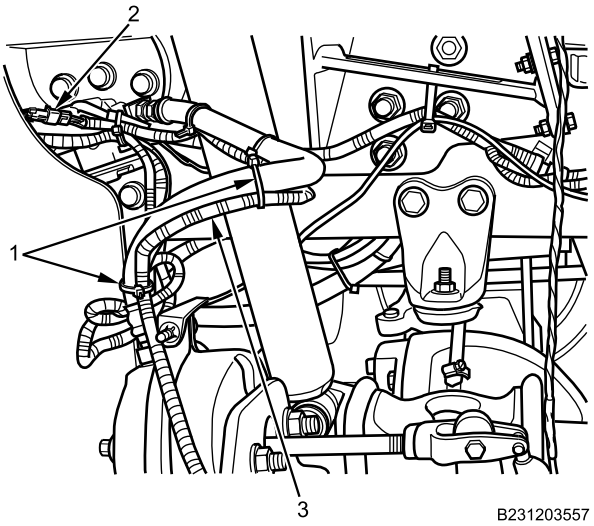

Figure 3. Cable Lock Straps.

5. Disconnect ABS sensor connector (Figure 3, Item 2).
6. Remove ABS sensor harness (Figure 3, Item 3).

END OF TASK

INSTALLATION

1. Install and route ABS sensor harness (Figure 4, Item 3) with new cable lock straps (Figure 4, Item 1) in locations noted during removal, and connect ABS sensor connector (Figure 4, Item 2).

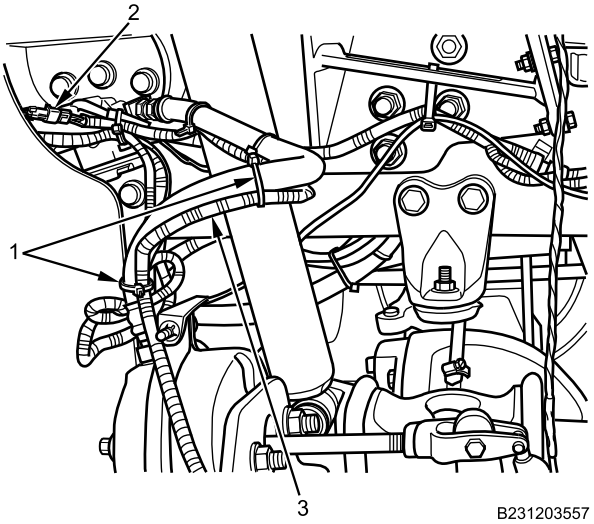

Figure 4. Cable Lock Straps.

FRONT ANTILOCK BRAKE SYSTEM (ABS) SENSOR REMOVAL AND INSTALLATION - (CONTINUED)

2. Install grommets (Figure 5, Item 1) around ABS sensor harness (Figure 5, Item 2).

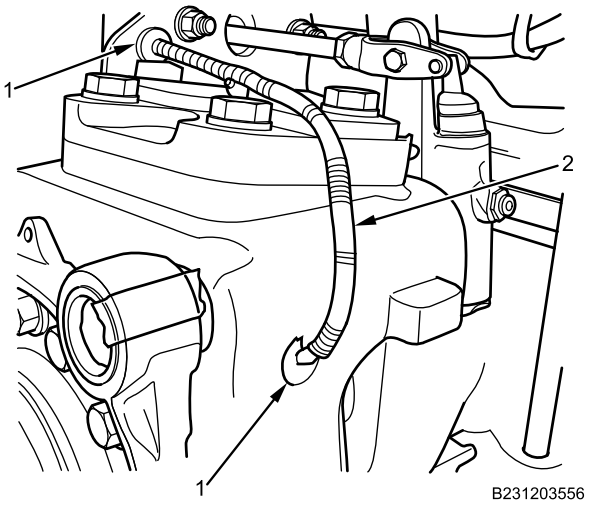

Figure 5. Sensor Harness.

3. Slightly compress new ABS sensor clip (Figure 6, Item 1) to install into steering knuckle cavity (Figure 6, Item 3).

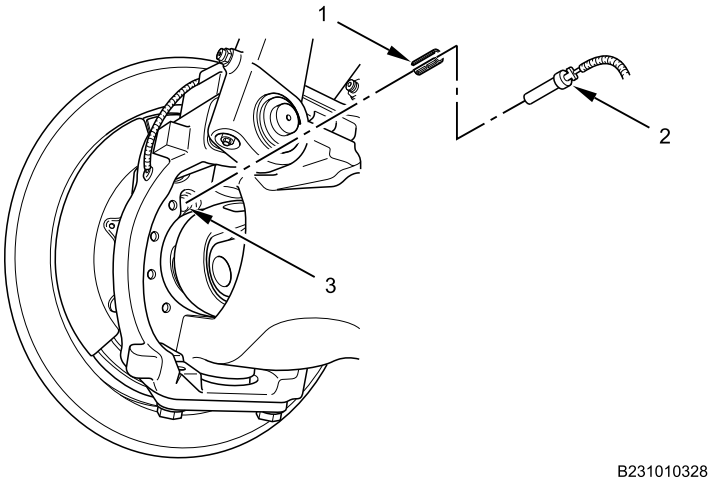

Figure 6. ABS Sensor.

4. Push ABS sensor (Figure 6, Item 2) into ABS sensor clip in steering knuckle cavity until fully seated. Pliers may be used to aid in installation. Sensor will self-adjust with first wheel rotation.

END OF TASK

FRONT ANTILOCK BRAKE SYSTEM (ABS) SENSOR REMOVAL AND INSTALLATION - (CONTINUED)

FOLLOW-ON MAINTENANCE

1. Close engine hood (TM 9-2355-106-10).
2. Turn MAIN POWER switch on (TM 9-2355-106-10).
3. Start engine and allow air brake system pressure to build to normal range (TM 9-2355-106-10).
4. Remove wheel chocks (TM 9-2355-106-10).
5. Test drive to verify proper brake operation (TM 9-2355-106-10).
6. Set parking brake (TM 9-2355-106-10).
7. Set transmission set in NEUTRAL (N) (TM 9-2355-106-10).
8. Turn engine off (TM 9-2355-106-10).
9. Turn MAIN POWER switch off (TM 9-2355-106-10).

END OF TASK

END OF WORK PACKAGE

FIELD MAINTENANCE

CENTER CHASSIS WIRING HARNESS REMOVAL AND INSTALLATION

INITIAL SETUP:

Tools and Special Tools
General Mechanic's Tool Kit (GMTK) (WP 0795, Item 37)

Materials/Parts
Grease (WP 0794, Item 22)
Wire tags (WP 0794, Item 33)
Cable lock straps - (4) (WP 0796, Item 104)
Cable lock straps - (7) (WP 0796, Item 124)

References
TM 9-2355-106-10
TM 9-2355-106-23P
WP 0786
WP 0782

Equipment Condition
Parking brake set (TM 9-2355-106-10)
Transmission set in NEUTRAL (N) (TM 9-2355-106-10)
Engine off (TM 9-2355-106-10)
MAIN POWER switch off (TM 9-2355-106-10)
Wheels chocked (TM 9-2355-106-10)
Engine hood open and secured (TM 9-2355-106-10)
Exterior fuel tank armor door opened (TM 9-2355-106-10)
Belly armor removed (WP 0606)
Left engine armor plate bracket removed (WP 0598)

WARNING

Use extreme caution when testing or working on or around electrical circuits. Always assume that electrical circuits are live. Electrical shock can occur upon contact with voltage high enough to cause current flow through muscles or nerves. On Direct Current (DC) systems, generally 1 milliamp of current can be felt, 5 milliamps can cause severe pain, 15 milliamps can cause loss of muscle control, and 70 milliamps can be fatal. Wear protective clothing; ensure skin, clothing, and surrounding areas are dry; do not wear jewelry; and touch only the insulated, nonmetallic parts of electrical components and testing equipment. To prevent electrical arcing, avoid shorting electrical test probes and jumper wires. Electrical arcing can cause bright flashes of light, capable of causing temporary blindness. If electrical injury occurs, immediately shut off power supply and seek medical assistance. Failure to comply may result in serious injury or death to personnel.

Engine hood is extremely heavy and requires two-person lift. Ensure that there is adequate space in front of the vehicle to open hood completely without pinning or pinching personnel between hood and any other structure. Use extreme care when working under hood and make sure it is properly supported. Failure to comply may result in serious injury or death to personnel.

CENTER CHASSIS WIRING HARNESS REMOVAL AND INSTALLATION - (CONTINUED)

NOTE

Remove cable lock straps as necessary to perform procedure. Note position and size of cable lock straps to aid installation.

Note routing of harnesses before removal to facilitate installation.

Label all wires before removal to aid installation.

REMOVAL

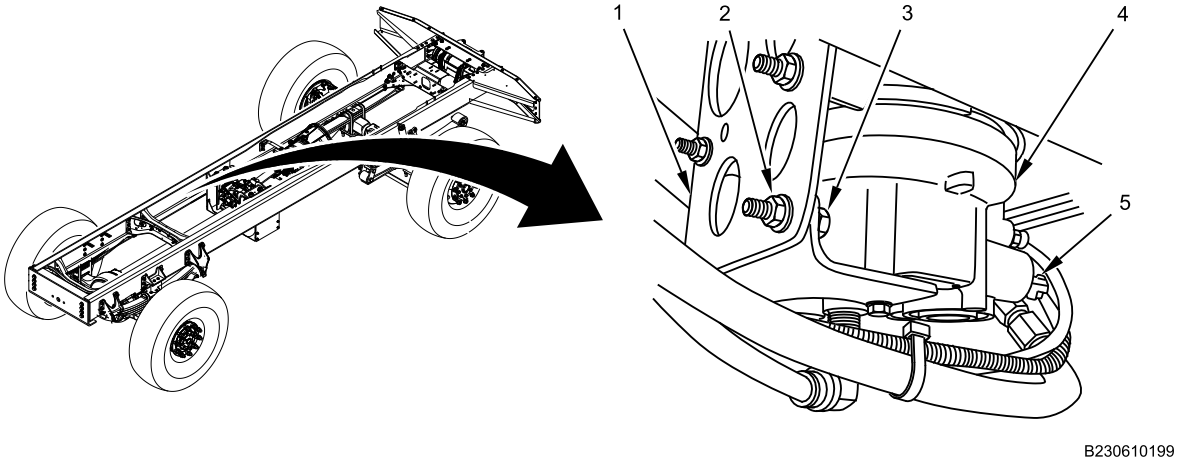

Figure 1. Air Dryer Connector.

1. Disconnect two-pin connector (Figure 1, Item 5) from air dryer (Figure 1, Item 4).
2. Remove four bolts (Figure 1, Item 3) and nuts (Figure 1, Item 2) from air dryer bracket (Figure 1, Item 1). One bolt and nut hidden. Position air dryer (Figure 1, Item 4) aside.

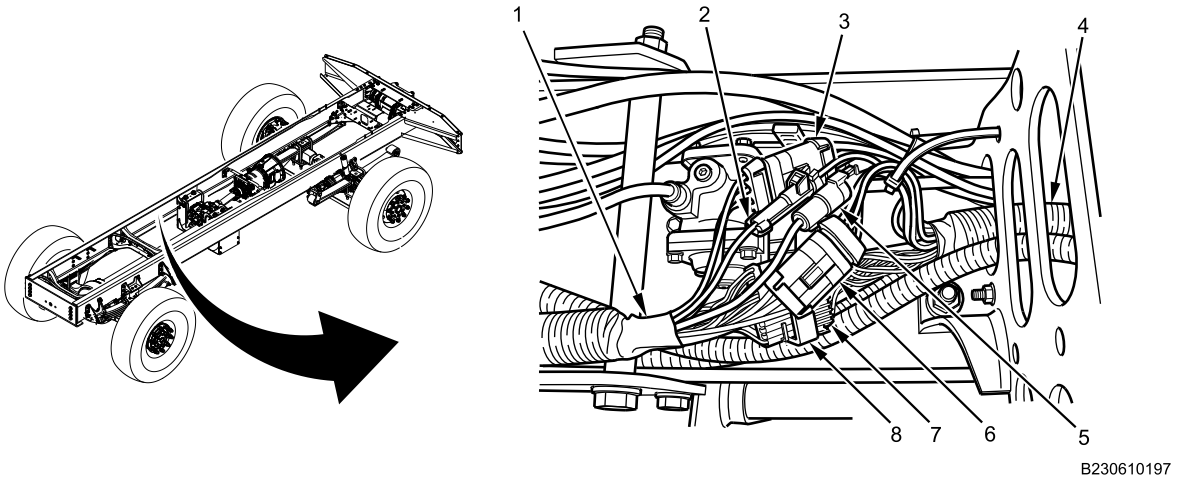

Figure 2. Rear of Center Chassis Harness, Inboard View.

3. Pull locking tab (Figure 2, Item 8) outward and disconnect 24-pin connector (Figure 2, Item 7) between rear chassis harness (Figure 2, Item 1) and center chassis harness (Figure 2, Item 4).
4. Disconnect two three-pin connectors (Figure 2, Item 3 and 6) and two one-pin connectors (Figure 2, Item 2 and 5) between rear chassis harness (Figure 2, Item 1) and center chassis harness (Figure 2, Item 4).

CENTER CHASSIS WIRING HARNESS REMOVAL AND INSTALLATION - (CONTINUED)

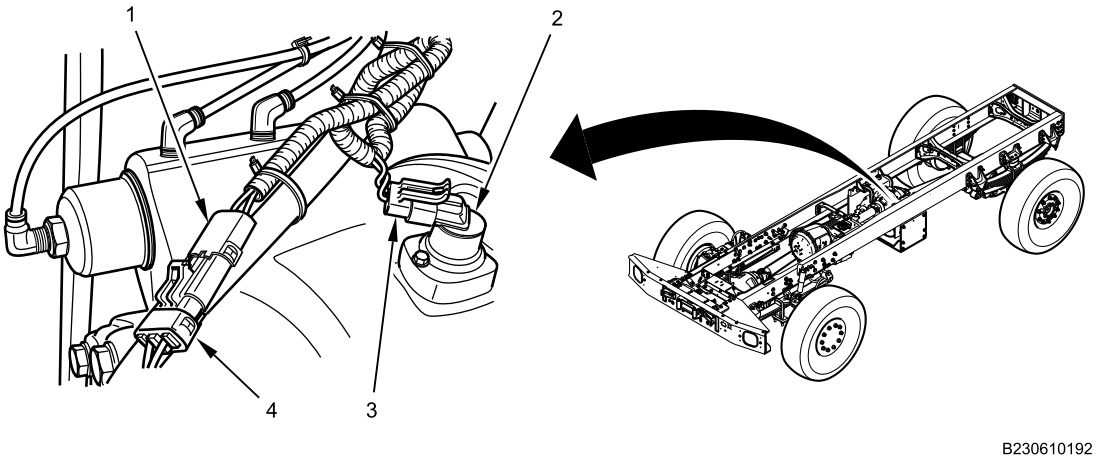

Figure 3. Transfer Case Sensors Connectors.

5. Disconnect two-pin connector (Figure 3, Item 1) from transfer case mode switch connector (Figure 3, Item 4).
6. Disconnect two-pin connector (Figure 3, Item 3) from vehicle speed sensor (VSS) (Figure 3, Item 2).

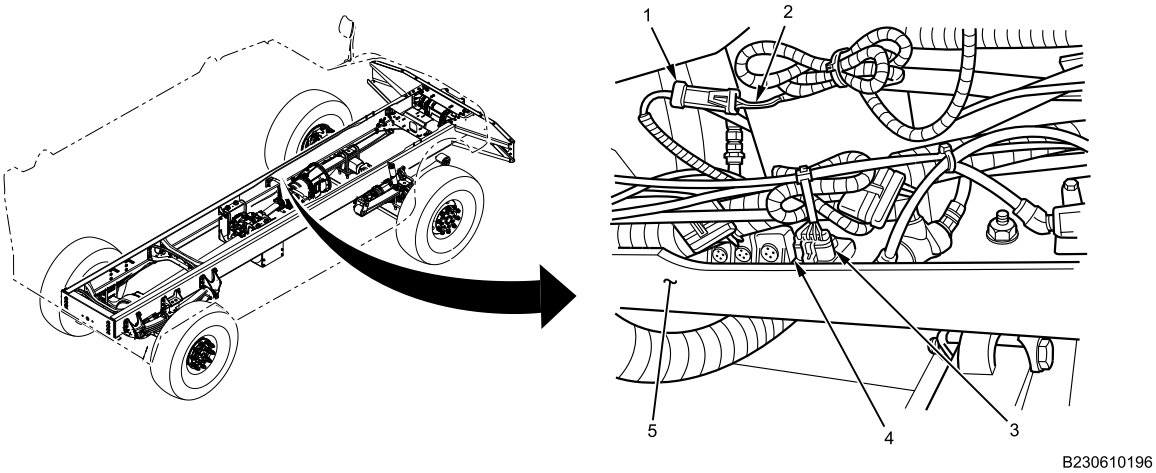

Figure 4. Four-Pack Shift Solenoids Connector.

7. Disconnect two-pin connector (Figure 4, Item 1) from engine harness (Figure 4, Item 2) near left frame rail (Figure 4, Item 5).
8. Disconnect five-pin connector (Figure 4, Item 3) from transfer case four-pack shift solenoids (Figure 4, Item 4).

CENTER CHASSIS WIRING HARNESS REMOVAL AND INSTALLATION - (CONTINUED)

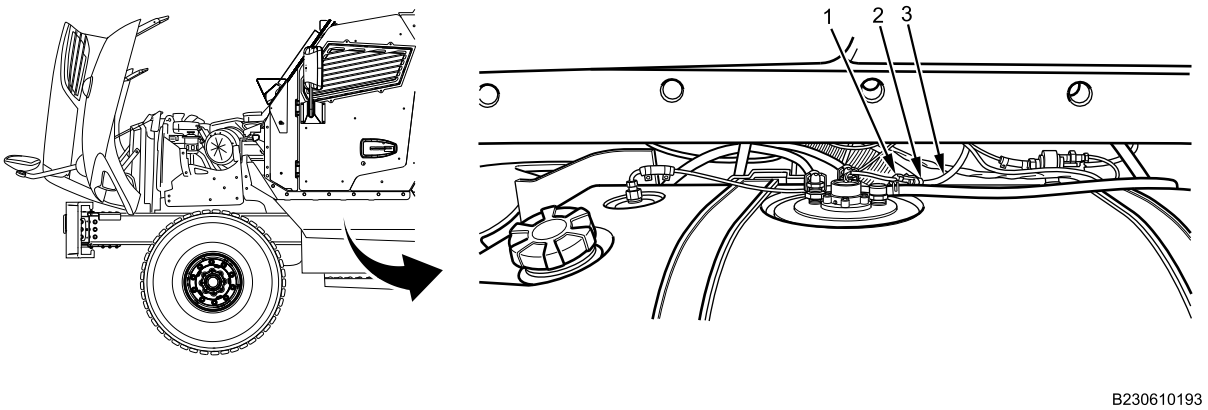

Figure 5. Fuel Sender Connector.

9. Disconnect two-pin harness connector (Figure 5, Item 2) from fuel sending unit connector (Figure 5, Item 1). Push harness (Figure 5, Item 3) over frame rail.

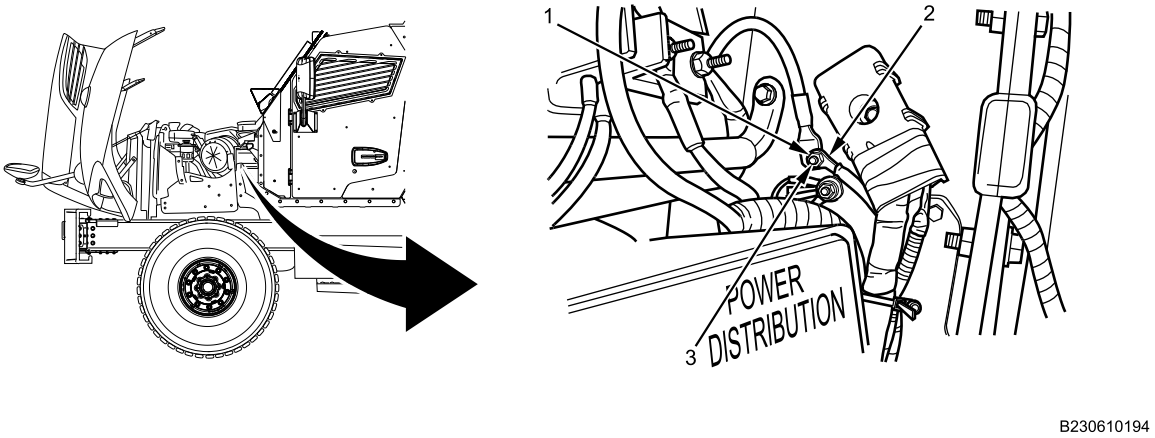

Figure 6. Center Chassis Harness Ground.

10. Remove nut (Figure 6, Item 1) and ground eyelet (Figure 6, Item 2) from ground stud (Figure 6, Item 3).

CENTER CHASSIS WIRING HARNESS REMOVAL AND INSTALLATION - (CONTINUED)

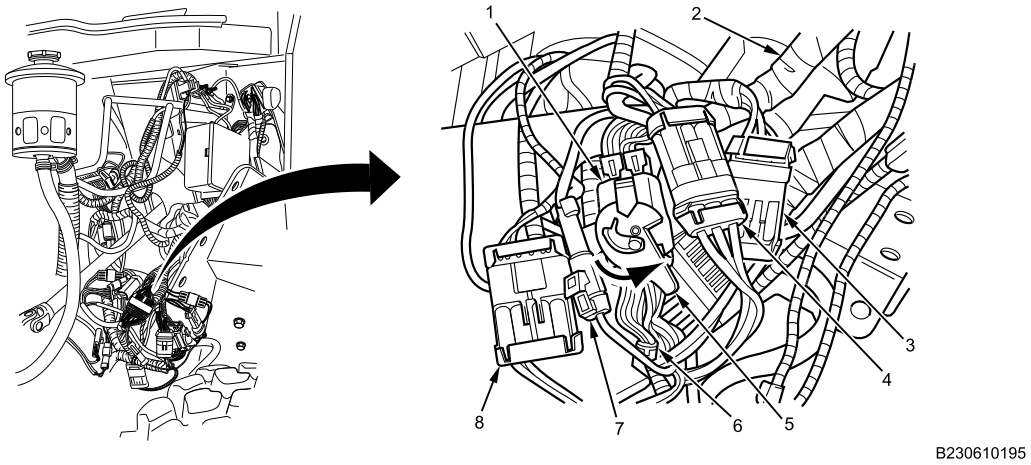

Figure 7. Five Connectors.

11. Rotate locking tab (Figure 7, Item 5) counterclockwise, and disconnect 40-pin connector (Figure 7, Item 1) from Power Distribution Center (PDC) harness (Figure 7, Item 2).
12. Disconnect four connectors (Figure 7, Item 3, 4, 7, and 8) from PDC harness (Figure 7, Item 2).
13. Remove center chassis harness (Figure 7, Item 6) from vehicle.

END OF TASK

CENTER CHASSIS WIRING HARNESS REMOVAL AND INSTALLATION - (CONTINUED)

INSTALLATION

WARNING

Dielectric grease is harmful to skin and eyes. If grease contacts eyes, rinse thoroughly and contact physician if irritation persists. If skin is contacted, wash thoroughly with soap and water. Failure to comply may result in serious injury to personnel.

NOTE

Apply dielectric grease to all connectors before installation.

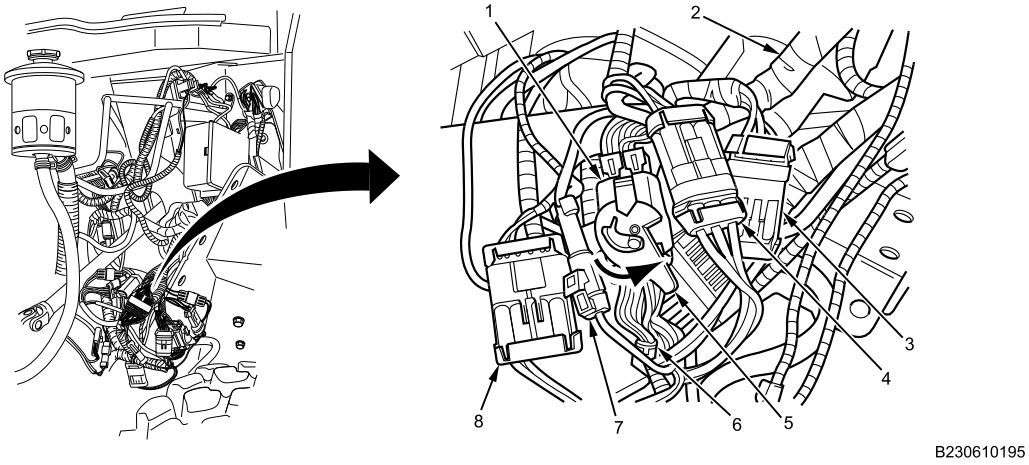

Figure 8. Five Connectors.

1. From left side of engine area, place center chassis harness (Figure 8, Item 6) into position and connect five connectors (Figure 8, Item 1, 3, 4, 7, and 8) to PDC harness (Figure 8, Item 2).
2. Rotate locking tab (Figure 8, Item 5) clockwise to lock 40-pin connector (Figure 8, Item 1).

CENTER CHASSIS WIRING HARNESS REMOVAL AND INSTALLATION - (CONTINUED)

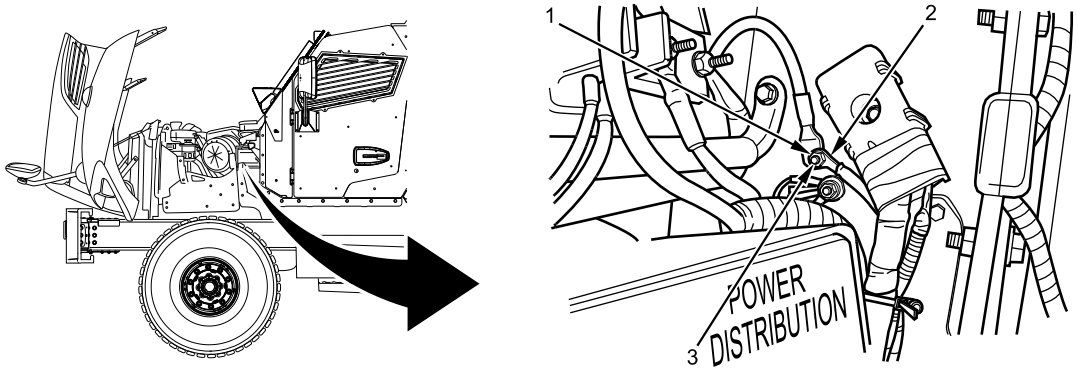

B230610194

Figure 9. Center Chassis Harness Ground.

3. Position ground eyelet (Figure 9, Item 2) on ground stud (Figure 9, Item 3). Install nut (Figure 9, Item 1) and tighten securely.

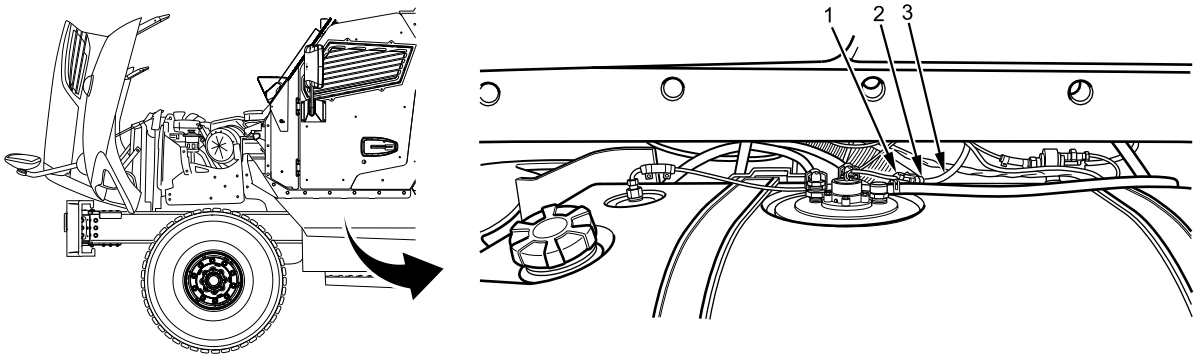

B230610193

Figure 10. Fuel Sender Connector.

4. Push harness (Figure 10, Item 3) over frame rail. Connect two-pin harness connector (Figure 10, Item 2) to fuel sending unit connector (Figure 10, Item 1).

CENTER CHASSIS WIRING HARNESS REMOVAL AND INSTALLATION - (CONTINUED)

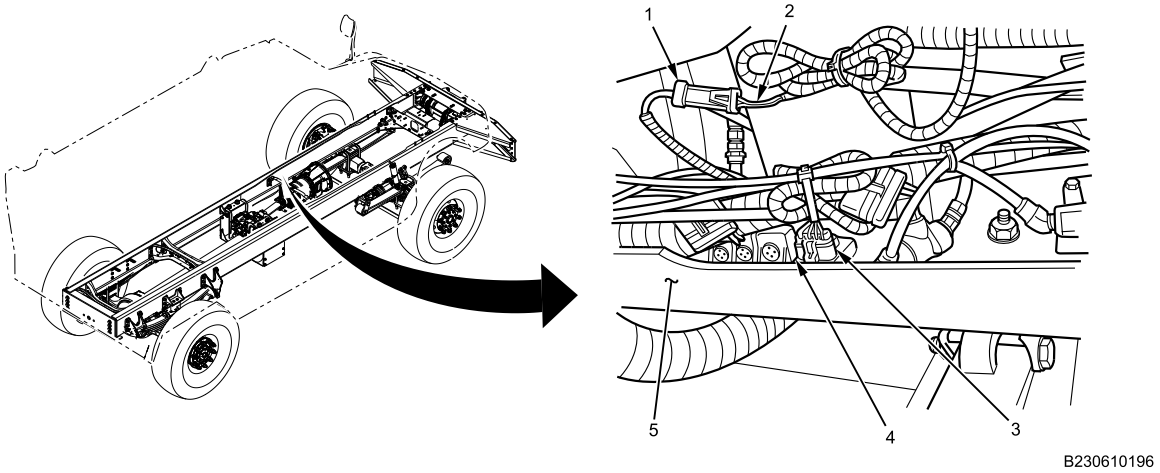

Figure 11. Four-Pack Shift Solenoids Connector.

5. Connect two-pin connector (Figure 11, Item 1) to engine harness (Figure 11, Item 2) near left frame rail (Figure 11, Item 5).
6. Connect five-pin connector (Figure 11, Item 3) to transfer case four-pack shift solenoids (Figure 11, Item 4).

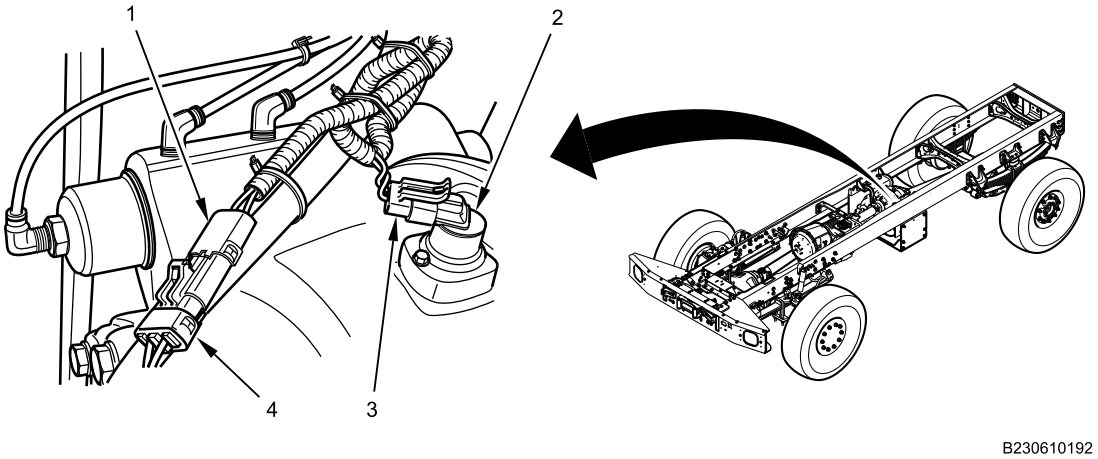

Figure 12. Transfer Case Sensors Connectors.

7. Connect two-pin connector (Figure 12, Item 3) to transfer case mode switch connector (Figure 12, Item 4) at top rear of transfer case.
8. Connect two-pin connector (Figure 12, Item 2) to VSS (Figure 12, Item 1) on top rear of transfer case.

CENTER CHASSIS WIRING HARNESS REMOVAL AND INSTALLATION - (CONTINUED)

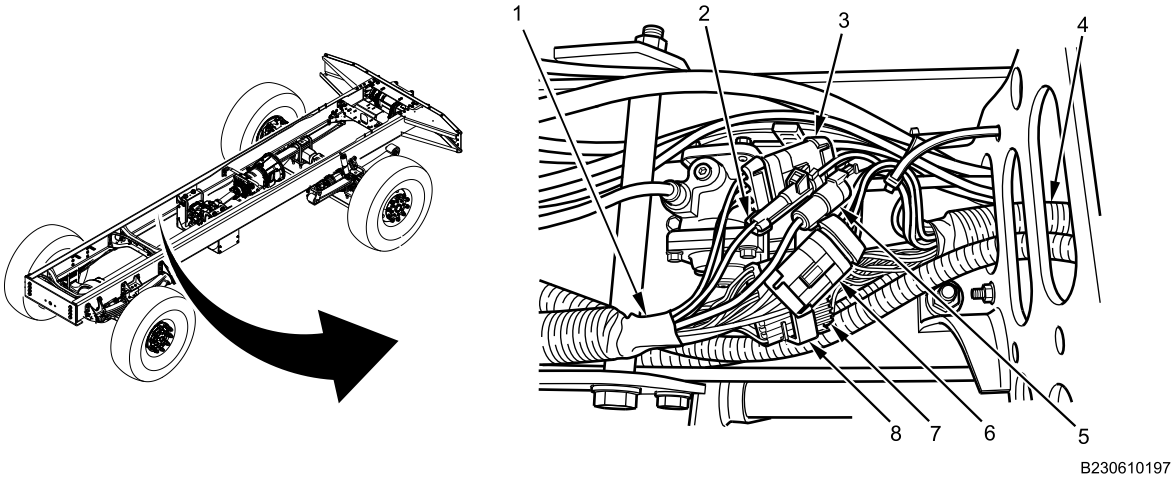

Figure 13. Rear of Center Chassis Harness, Inboard View.

9. Connect 24-pin connector (Figure 13, Item 7) between rear chassis harness (Figure 13, Item 1) and center chassis harness (Figure 13, Item 4). Push locking tab (Figure 13, Item 8) inward.
10. Connect two three-pin connectors (Figure 13, Item 3 and 6) and two one-pin connectors (Figure 13, Item 2 and 5) between rear chassis harness (Figure 13, Item 1) and center chassis harness (Figure 13, Item 4).

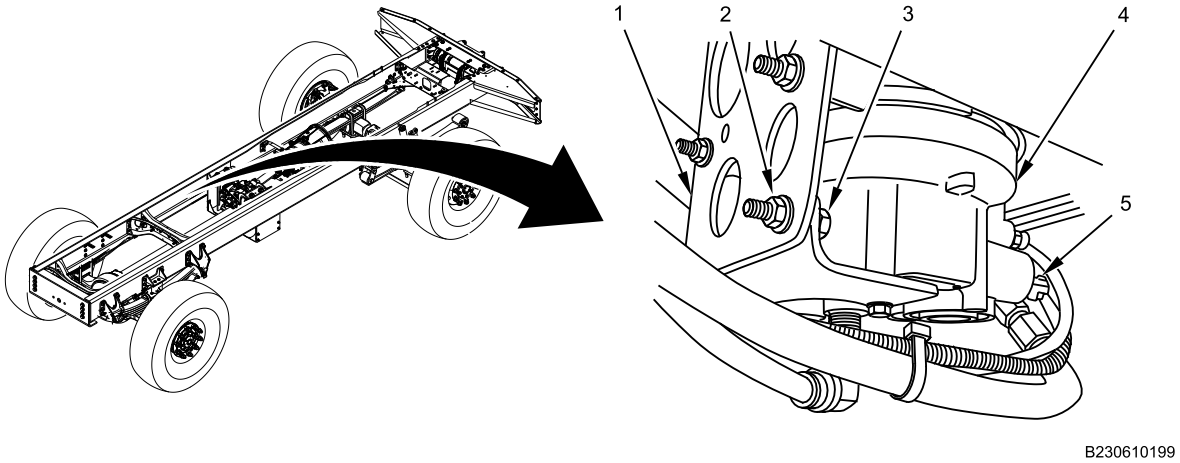

Figure 14. Air Dryer.

11. Install air dryer (Figure 14, Item 4) on bracket (Figure 14, Item 1) with four bolts (Figure 14, Item 3) and nuts (Figure 14, Item 2). One bolt and nut hidden. Tighten securely.
12. Connect two-pin connector (Figure 14, Item 5) to air dryer (Figure 14, Item 4).
13. Install all cable lock straps and tighten securely.

END OF TASK

CENTER CHASSIS WIRING HARNESS REMOVAL AND INSTALLATION - (CONTINUED)

FOLLOW-ON MAINTENANCE

1. Install belly armor (WP 0606).
2. Install left engine armor plate bracket (WP 0598).
3. Close engine hood (TM 9-2355-106-10).
4. Close exterior fuel tank armor door (TM 9-2355-106-10).
5. Turn MAIN POWER switch on (TM 9-2355-106-10).
6. Verify light operation (TM 9-2355-106-10).
7. Turn MAIN POWER switch off (TM 9-2355-106-10).
8. Remove wheel chocks (TM 9-2355-106-10).

END OF TASK

END OF WORK PACKAGE

FIELD MAINTENANCE

REAR CHASSIS HARNESS REMOVAL AND INSTALLATION

INITIAL SETUP:

Tools and Special Tools
General Mechanic's Tool Kit (GMTK) (WP 0795, Item 37)

Materials/Parts
Grease (WP 0794, Item 22)
Wire tags (WP 0794, Item 33)
Cable lock straps - (11) (WP 0796, Item 124)

References
TM 9-2355-106-10
TM 9-2355-106-23P
WP 0786
WP 0782

Equipment Condition
Parking brake set (TM 9-2355-106-10)
Transmission set in NEUTRAL (N) (TM 9-2355-106-10)
Engine off (TM 9-2355-106-10)
MAIN POWER switch off (TM 9-2355-106-10)
Wheels chocked (TM 9-2355-106-10)

WARNING

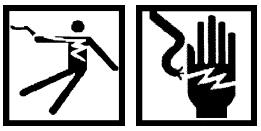

Use extreme caution when testing or working on or around electrical circuits. Always assume that electrical circuits are live. Electrical shock can occur upon contact with voltage high enough to cause current flow through muscles or nerves. On Direct Current (DC) systems, generally 1 milliamp of current can be felt, 5 milliamps can cause severe pain, 15 milliamps can cause loss of muscle control, and 70 milliamps can be fatal. Wear protective clothing; ensure skin, clothing, and surrounding areas are dry; do not wear jewelry; and touch only the insulated, nonmetallic parts of electrical components and testing equipment. To prevent electrical arcing, avoid shorting electrical test probes and jumper wires. Electrical arcing can cause bright flashes of light, capable of causing temporary blindness. If electrical injury occurs, immediately shut off power supply and seek medical assistance. Failure to comply may result in serious injury or death to personnel.

NOTE

Label all wires before removal to facilitate installation.

REAR CHASSIS HARNESS REMOVAL AND INSTALLATION - (CONTINUED)

REMOVAL

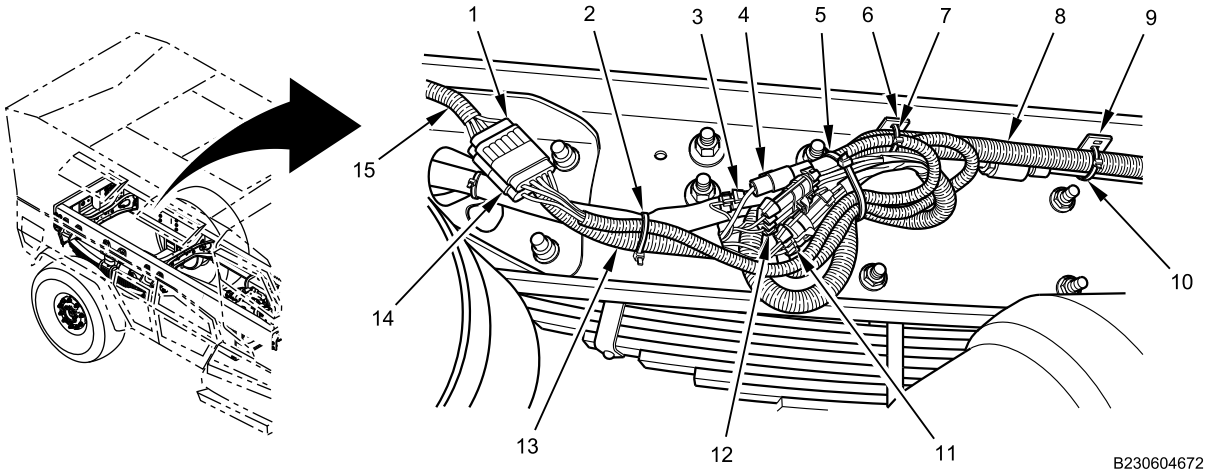

Figure 1. Rear Chassis Harness, Inboard View.

1. Disconnect three-pin connector (Figure 1, Item 14) and five-pin connector (Figure 1, Item 1) between rear chassis harness (Figure 1, Item 8) and taillamp harness (Figure 1, Item 15).
2. Remove and discard two cable lock straps (Figure 1, Item 2 and 5).
3. Disconnect four connectors (Figure 1, Item 3, 4, 11, and 12) between rear chassis harness (Figure 1, Item 8) and trailer harness (Figure 1, Item 13).

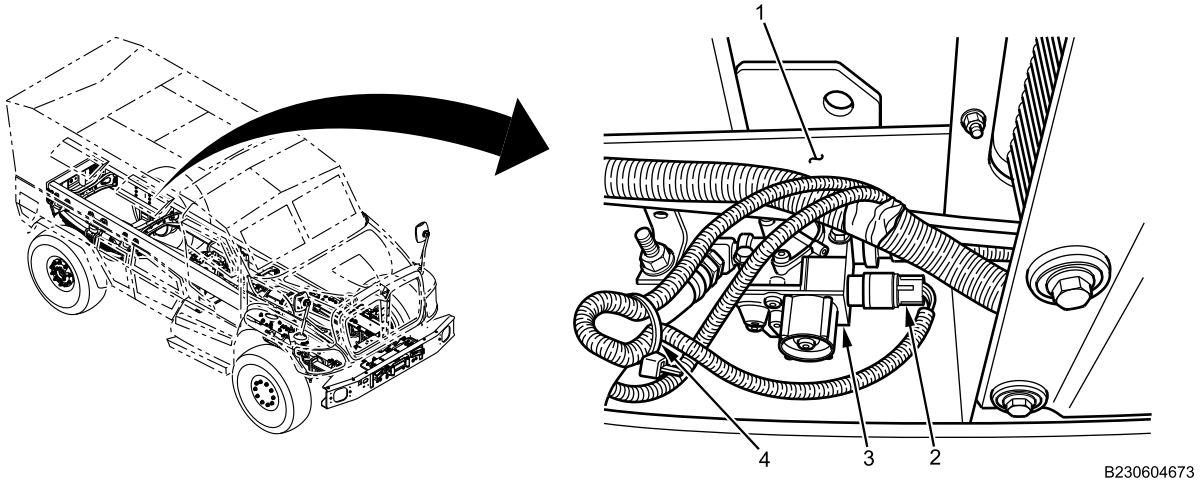

Figure 2. Left Modulator Valve.

4. Remove two cable lock straps (Figure 1, Item 7 and 10) from frame brackets (Figure 1, Item 6 and 9). Discard cable lock straps.
5. Disconnect three-pin connector (Figure 2, Item 2) from modulator valve (Figure 2, Item 3) on left frame rail (Figure 2, Item 1).
6. Remove and discard cable lock strap (Figure 2, Item 4).

REAR CHASSIS HARNESS REMOVAL AND INSTALLATION - (CONTINUED)

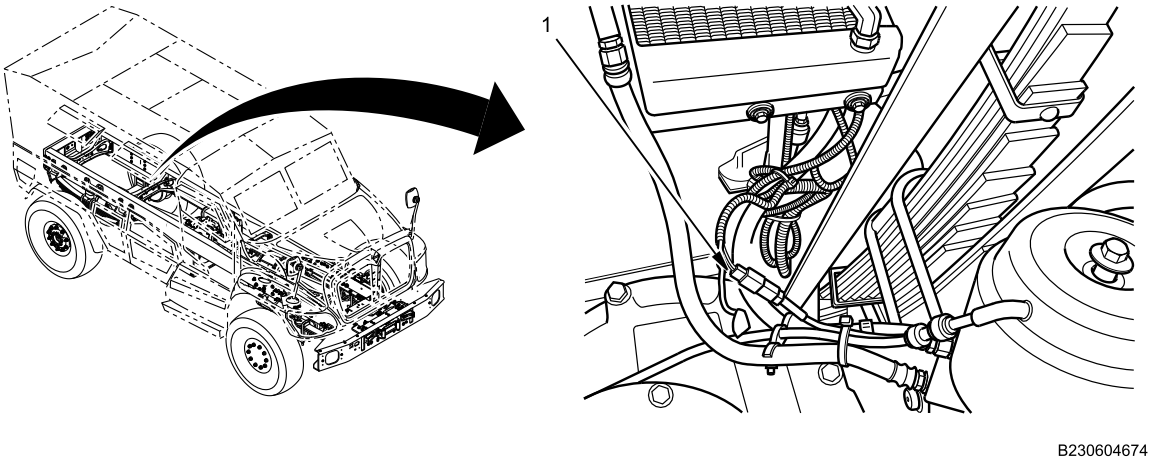

Figure 3. Left Two-Pin Connector.

7. Disconnect two-pin connector (Figure 3, Item 1) from left rear brake backing plate.

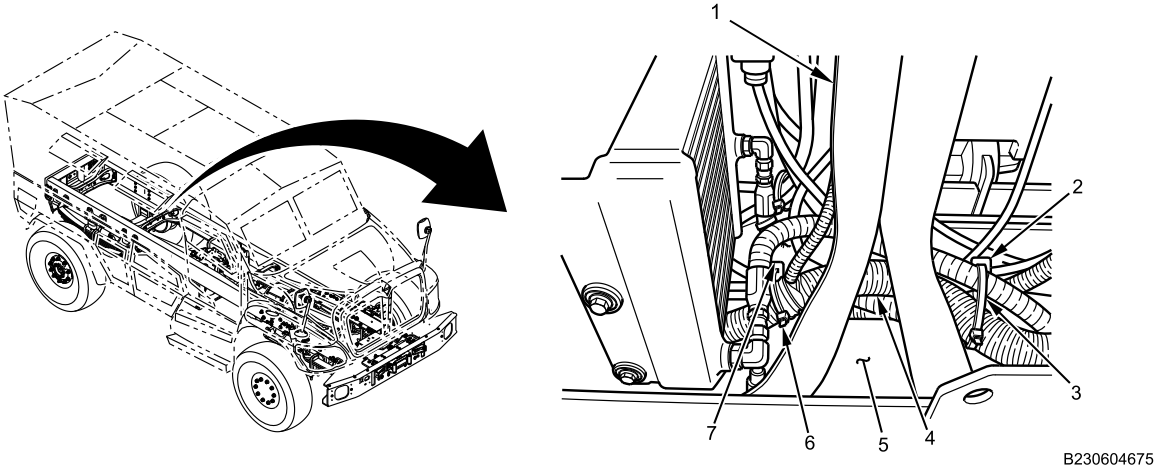

Figure 4. Cable Lock Straps Near Crossmember.

8. Remove two cable lock straps (Figure 4, Item 3 and 6) fastening rear chassis harness (Figure 4, Item 4) to brackets (Figure 4, Item 2 and 7) on left frame rail (Figure 4, Item 5) near crossmember (Figure 4, Item 1). Discard cable lock straps.

REAR CHASSIS HARNESS REMOVAL AND INSTALLATION - (CONTINUED)

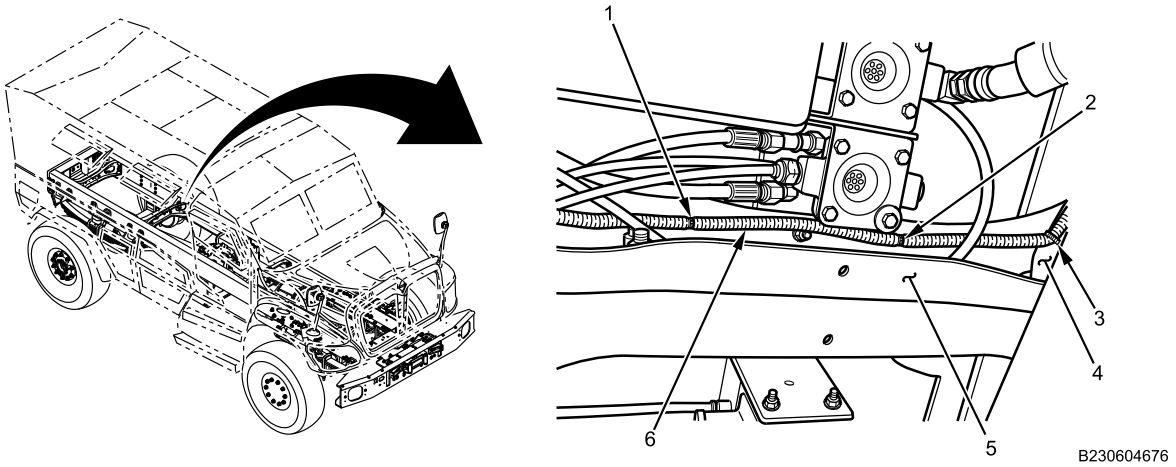

Figure 5. Cable Lock Straps on Crossmember.

9. Remove and discard two cable lock straps (Figure 5, Item 1 and 2) securing rear chassis harness (Figure 5, Item 6) to crossmember (Figure 5, Item 5). Remove and discard cable lock strap (Figure 5, Item 3) securing rear chassis harness to hose (Figure 5, Item 4).

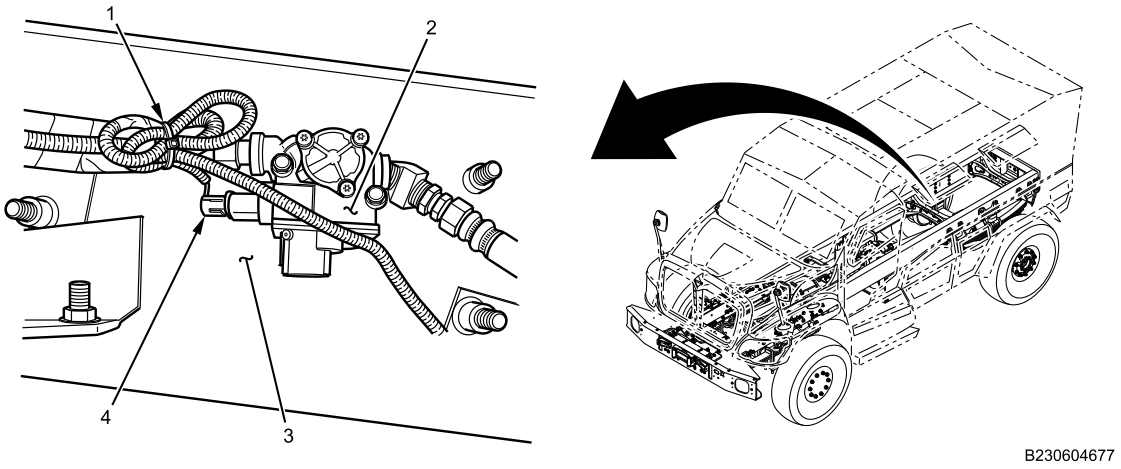

Figure 6. Right Modulator Valve.

10. Disconnect three-pin connector (Figure 6, Item 4) from modulator valve (Figure 6, Item 2) on right frame rail (Figure 6, Item 3).

REAR CHASSIS HARNESS REMOVAL AND INSTALLATION - (CONTINUED)

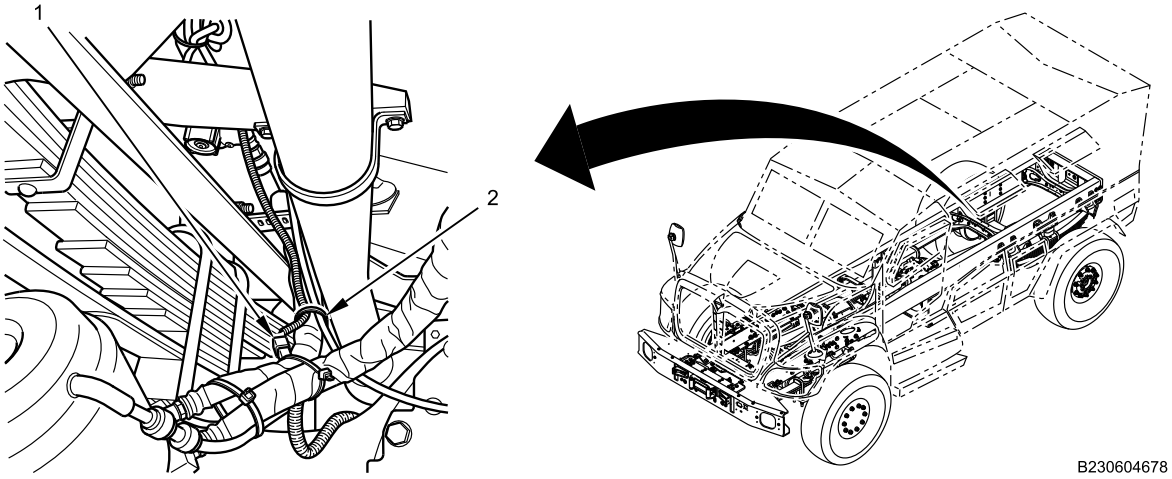

Figure 7. Right Two-Pin Connector.

11. Remove and discard cable lock strap (Figure 6, Item 1).
12. Remove and discard cable lock strap (Figure 7, Item 2).
13. Disconnect two-pin connector (Figure 7, Item 1) from right rear brake backing plate.

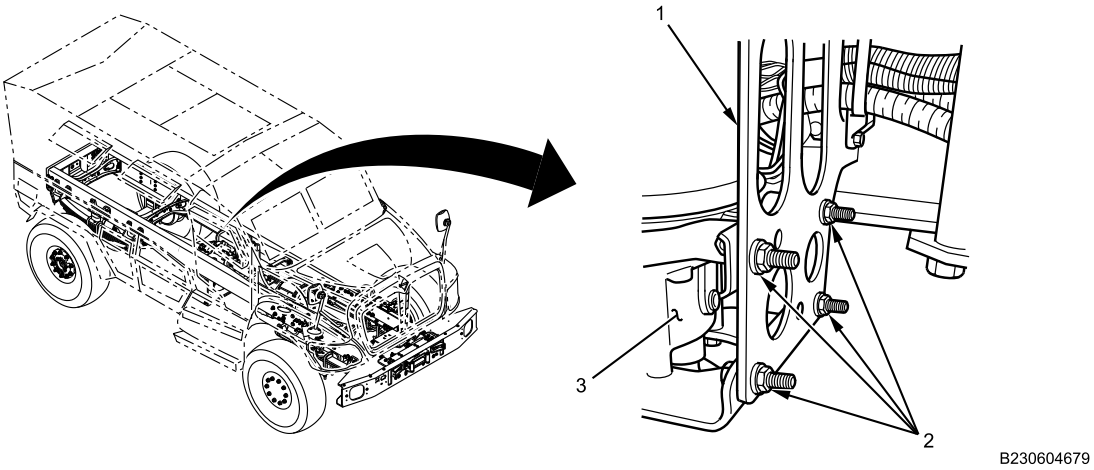

Figure 8. Air Dryer Support Bracket Nuts.

14. Remove four air dryer bracket nuts (Figure 8, Item 2) and bolts from air dryer bracket (Figure 8, Item 1). Position air dryer (Figure 8, Item 3) aside, using rubber tie-down strap.

REAR CHASSIS HARNESS REMOVAL AND INSTALLATION - (CONTINUED)

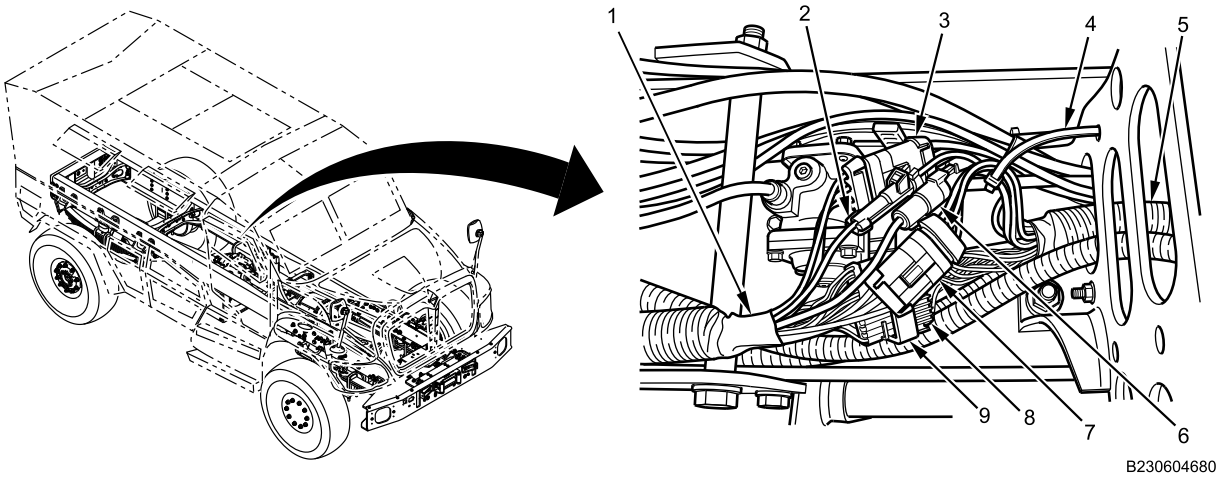

Figure 9. Front of Rear Chassis Harness, Inboard View.

15. Pull locking tab (Figure 9, Item 9) outward and disconnect 24-pin connector (Figure 9, Item 8) between rear chassis harness (Figure 9, Item 1) and center chassis harness (Figure 9, Item 5).
16. Disconnect two three-pin connectors (Figure 9, Item 3 and 7) and two one-pin connectors (Figure 9, Item 2 and 6). Remove and discard cable lock strap (Figure 9, Item 4).
17. Remove rear chassis harness (Figure 9, Item 1) by pulling it forward and out of vehicle.

END OF TASK

INSTALLATION

WARNING

Dielectric grease is harmful to skin and eyes. If grease contacts eyes, rinse thoroughly and contact physician if irritation persists. If skin is contacted, wash thoroughly with soap and water. Failure to comply may result in serious injury to personnel.

NOTE

Apply dielectric grease to all electrical contacts before installation.

REAR CHASSIS HARNESS REMOVAL AND INSTALLATION - (CONTINUED)

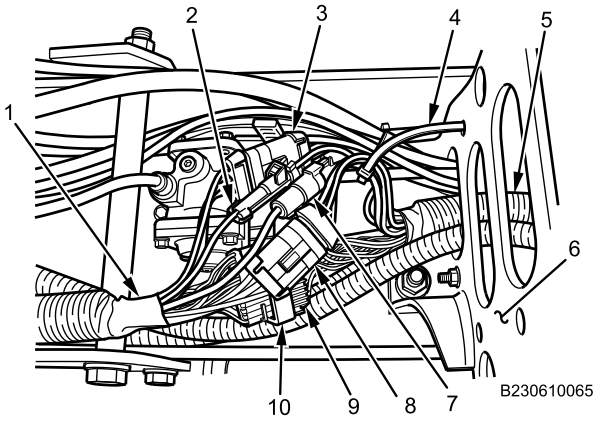

Figure 10. Front of Rear Chassis Harness, Inboard View.

1. From directly behind air dryer bracket (Figure 10, Item 6), feed rear chassis harness (Figure 10, Item 1) between crossmember and left frame rail, toward rear of vehicle.
2. Connect 24-pin connector (Figure 10, Item 9) and press locking tab (Figure 10, Item 10) in.
3. Connect four connectors (Figure 10, Item 2, 3, 7, and 8) between rear chassis harness (Figure 10, Item 1) and center chassis harness (Figure 10, Item 5), next to air dryer bracket (Figure 10, Item 6).
4. Secure center chassis harness (Figure 10, Item 5) to air dryer bracket (Figure 10, Item 6) with new cable lock strap (Figure 10, Item 4).

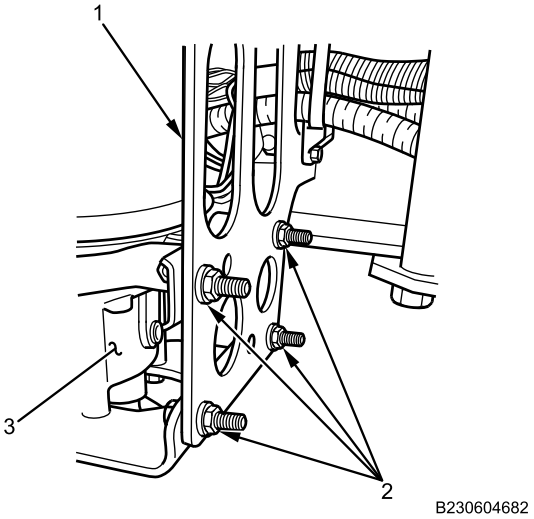

Figure 11. Air Dryer Support Bracket Nuts.

5. Remove rubber tie-down strap from air dryer (Figure 11, Item 3). Install air dryer on air dryer bracket (Figure 11, Item 1) with four bolts and nuts (Figure 11, Item 2). Tighten nuts and bolts securely.

REAR CHASSIS HARNESS REMOVAL AND INSTALLATION - (CONTINUED)

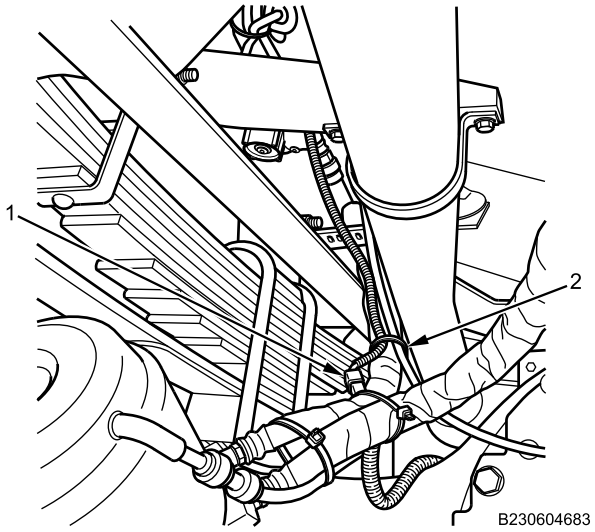

Figure 12. Right Two-Pin Connector.

6. Connect two-pin connector (Figure 12, Item 1) near right rear wheel and secure to air hoses with new cable lock strap (Figure 12, Item 2).

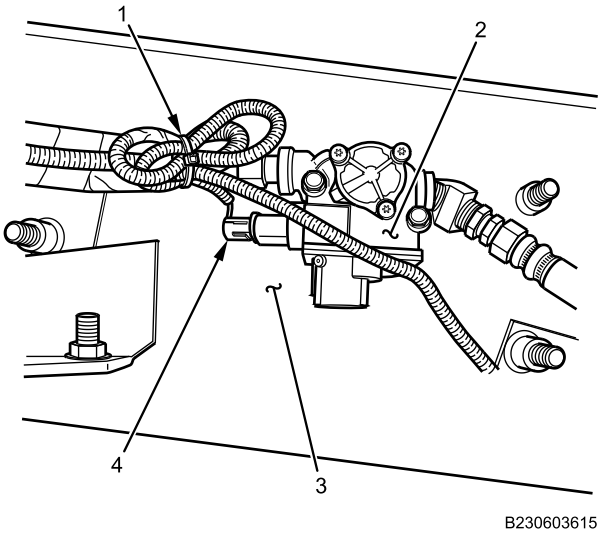

Figure 13. Right Modulator Valve.

7. Connect three-pin connector (Figure 13, Item 4) to modulator valve (Figure 13, Item 2) on right frame rail (Figure 13, Item 3), and secure to harness with new cable lock strap (Figure 13, Item 1).

REAR CHASSIS HARNESS REMOVAL AND INSTALLATION - (CONTINUED)

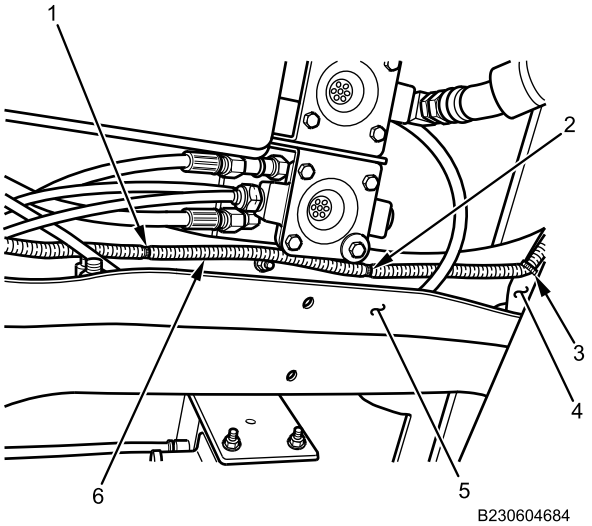

Figure 14. Cable Lock Straps on Crossmember.

8. Secure rear chassis harness (Figure 14, Item 6) to crossmember (Figure 14, Item 5) with two new cable lock straps (Figure 14, Item 1 and 2). Secure rear chassis harness to hose (Figure 14, Item 4) with new cable lock strap (Figure 14, Item 3).

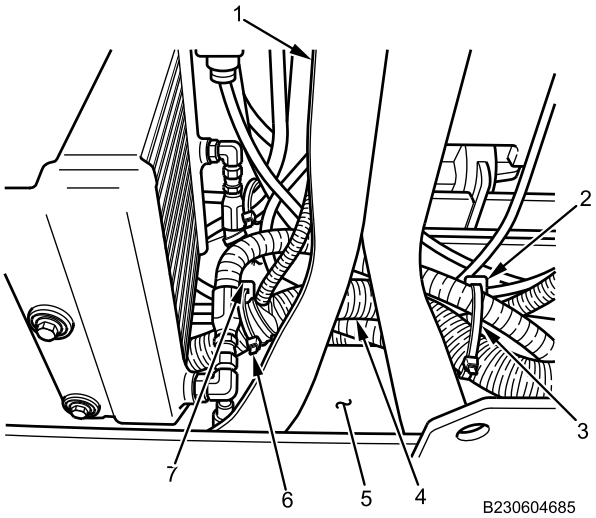

Figure 15. Cable Lock Straps Near Crossmember.

9. Secure rear chassis harness (Figure 15, Item 4) to brackets (Figure 15, Item 2 and 7) on left frame rail (Figure 15, Item 5) near crossmember (Figure 15, Item 1) with two new cable lock straps (Figure 15, Item 3 and 6).

REAR CHASSIS HARNESS REMOVAL AND INSTALLATION - (CONTINUED)

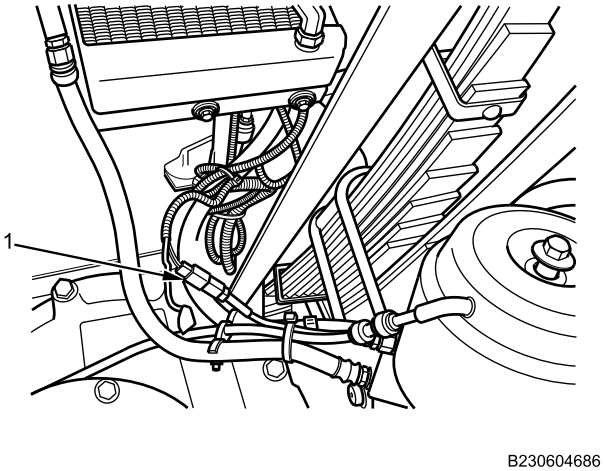

Figure 16. Left Two-Pin Connector.

10. Connect two-pin connector (Figure 16, Item 1) near left rear wheel.

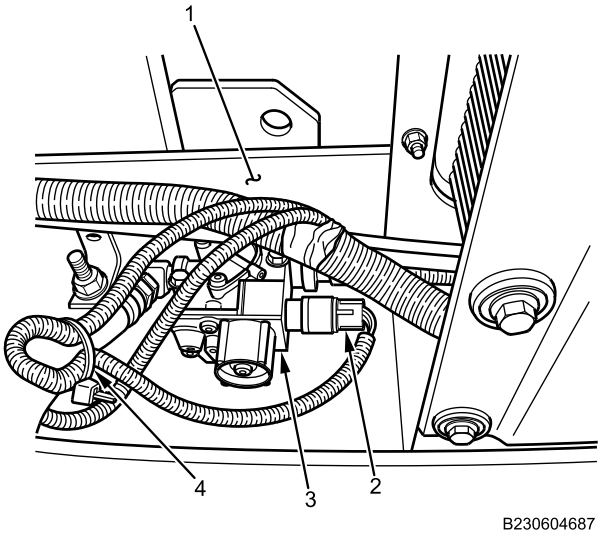

Figure 17. Left Modulator Valve.

11. Connect three-pin connector (Figure 17, Item 2) to modulator valve (Figure 17, Item 3) on left frame rail (Figure 17, Item 1). Secure three-pin connector wiring to harness with new cable lock strap (Figure 17, Item 4).

REAR CHASSIS HARNESS REMOVAL AND INSTALLATION - (CONTINUED)

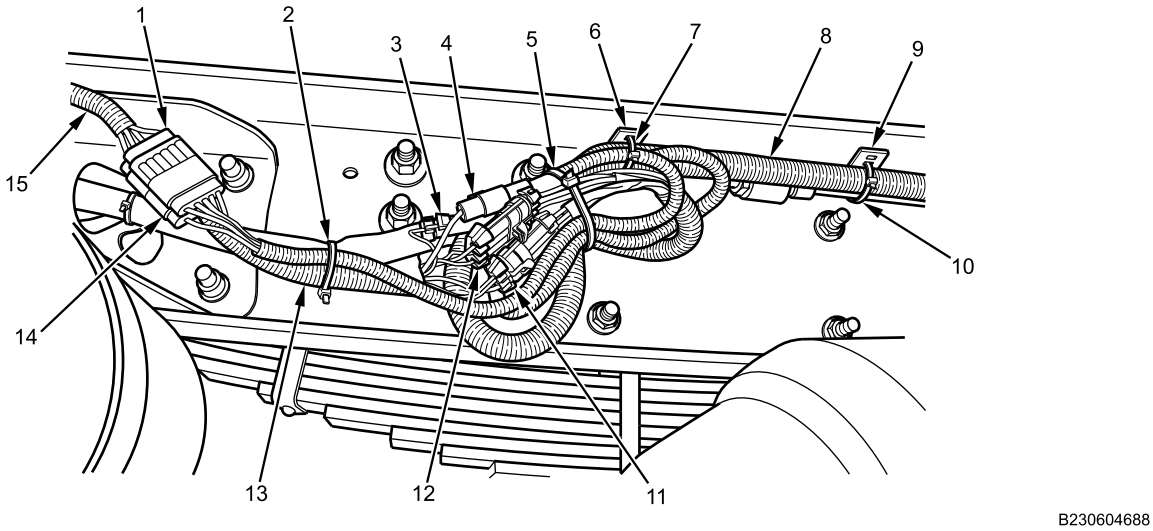

Figure 18. Rear Chassis Harness, Inboard View.

12. Secure rear chassis harness (Figure 18, Item 8) to frame brackets (Figure 18, Item 6 and 9) with two new cable lock straps (Figure 18, Item 7 and 10)
13. Connect four connectors (Figure 18, Item 3, 4, 11 and 12) between rear chassis harness (Figure 18, Item 8) and trailer harness (Figure 18, Item 13).
14. Connect two connectors (Figure 18, Item 1 and 14) between rear chassis harness (Figure 18, Item 8) and taillamp harness (Figure 18, Item 15).
15. Secure rear chassis harness (Figure 18, Item 8) to trailer harness (Figure 18, Item 13) with two new cable lock straps (Figure 18, Item 2 and 5).

END OF TASK

FOLLOW-ON MAINTENANCE

1. MAIN POWER switch on (TM 9-2355-106-10).
2. Verify taillight operation (TM 9-2355-106-10).
3. MAIN POWER switch off (TM 9-2355-106-10).
4. Remove wheel chocks (TM 9-2355-106-10).

END OF TASK

END OF WORK PACKAGE

FIELD MAINTENANCE

FRONT TRAILER HOOKUP COVER REMOVAL AND INSTALLATION

INITIAL SETUP:

Tools and Special Tools
General Mechanic's Tool Kit (GMTK) (WP 0795, Item 37)

Materials/Parts
Compound (WP 0794, Item 13)
Gloves (WP 0794, Item 18)
Goggles, industrial (WP 0794, Item 20)
Faceshield, industrial (WP 0794, Item 16)
Lockwashers - (4) (WP 0796, Item 24)

References
TM 9-2355-106-10
TM 9-2355-106-23P
WP 0786
WP 0782

Equipment Condition
Parking brake set (TM 9-2355-106-10)
Transmission set in NEUTRAL (N) (TM 9-2355-106-10)
Engine off (TM 9-2355-106-10)
MAIN POWER switch off (TM 9-2355-106-10)
Wheels chocked (TM 9-2355-106-10)

WARNING

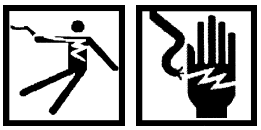

Use extreme caution when testing or working on or around electrical circuits. Always assume that electrical circuits are live. Electrical shock can occur upon contact with voltage high enough to cause current flow through muscles or nerves. On Direct Current (DC) systems, generally 1 milliamp of current can be felt, 5 milliamps can cause severe pain, 15 milliamps can cause loss of muscle control, and 70 milliamps can be fatal. Wear protective clothing; ensure skin, clothing, and surrounding areas are dry; do not wear jewelry; and touch only the insulated, nonmetallic parts of electrical components and testing equipment. To prevent electrical arcing, avoid shorting electrical test probes and jumper wires. Electrical arcing can cause bright flashes of light, capable of causing temporary blindness. If electrical injury occurs, immediately shut off power supply and seek medical assistance. Failure to comply may result in serious injury or death to personnel.

Turn off ignition switch and MAIN POWER switch before performing electrical system maintenance. Failure to comply may result in serious injury or death to personnel.

NOTE

Front trailer hookup cover is located on left, front side of front bumper.

FRONT TRAILER HOOKUP COVER REMOVAL AND INSTALLATION - (CONTINUED)

REMOVAL

1. Remove four nuts (Figure 1, Item 2) and lockwashers (Figure 1, Item 3) securing front trailer hookup cover and front trailer hookup harness (Figure 1, Item 1) to front bumper (Figure 1, Item 4). Discard lockwashers.

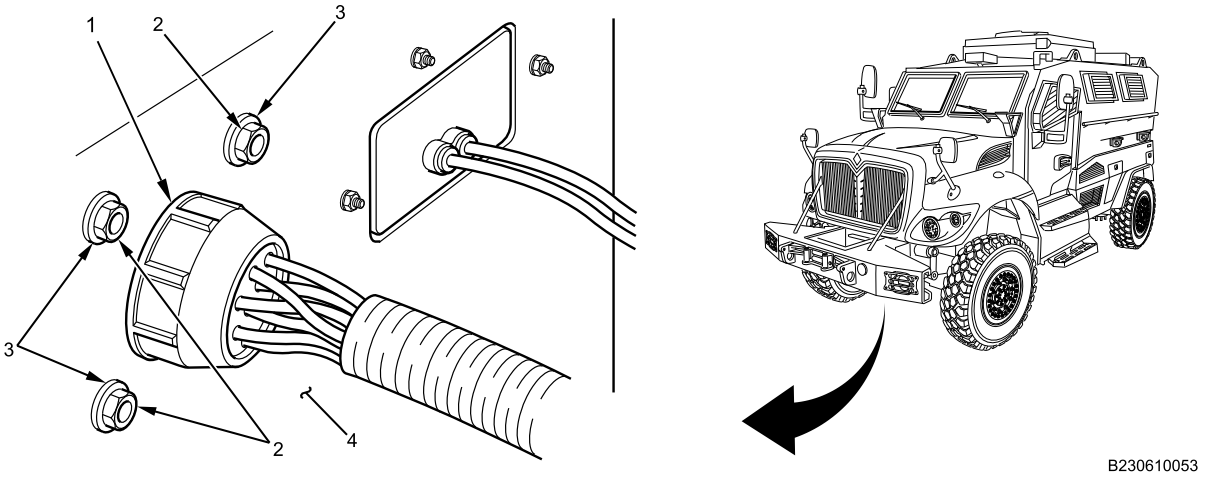

Figure 1. Front Trailer Hookup Cover Fasteners.

2. Remove four bolts (Figure 2, Item 2) and front trailer hookup cover (Figure 2, Item 1) from front bumper.

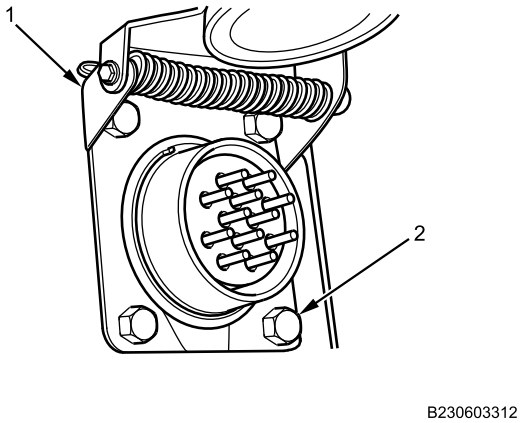

Figure 2. Front Trailer Hookup Cover.

END OF TASK

FRONT TRAILER HOOKUP COVER REMOVAL AND INSTALLATION - (CONTINUED)

INSTALLATION

WARNING

Corrosion preventive compound is toxic. Use only in well-ventilated area. Do not get in eyes; wear chemical safety goggles and full-face shield when using. Avoid contact with skin and wear rubber or plastic, solvent-resistant gloves. In case of contact, remove contaminated clothing and immediately wash area with soap and water. If compound contacts eyes, flush eyes with large amounts of water for at least 15 minutes and get immediate medical attention. If swallowed, do not induce vomiting; contact a physician immediately. Failure to comply may result in serious injury or death to personnel.

NOTE

Apply corrosion preventive compound to all nuts, screws and bolts before installation.

1. Position front trailer hookup cover (Figure 3, Item 1) and trailer harness connector (Figure 3, Item 3) with four bolts (Figure 3, Item 4) to front bumper with notch (Figure 3, Item 2) at top.

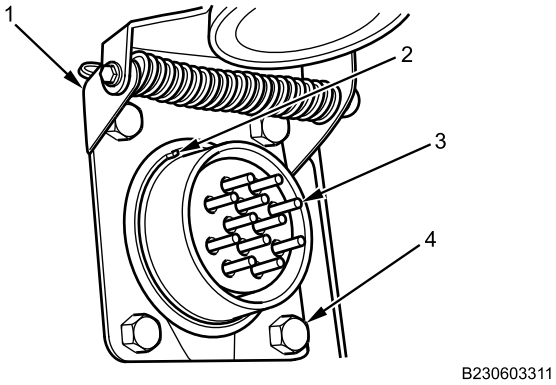

Figure 3. Front Trailer Hookup Cover.

FRONT TRAILER HOOKUP COVER REMOVAL AND INSTALLATION - (CONTINUED)

2. Install four new lockwashers (Figure 4, Item 3) and four nuts (Figure 4, Item 2) securing front trailer hookup cover and front trailer hookup harness (Figure 4, Item 1) to front bumper (Figure 4, Item 4). Tighten nuts securely.

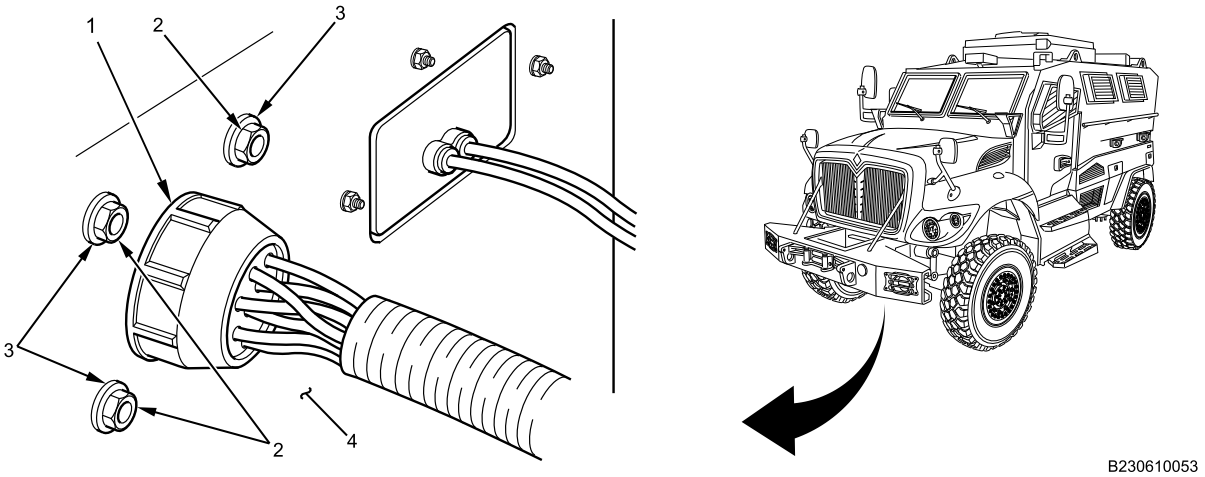

Figure 4. Front Trailer Hookup Cover Fasteners.

END OF TASK

FOLLOW-ON MAINTENANCE

1. Verify front trailer hookup operation (TM 9-2355-106-10).
2. Remove wheel chocks (TM 9-2355-106-10).

END OF TASK

END OF WORK PACKAGE

FIELD MAINTENANCE

FRONT TRAILER HOOKUP HARNESS REMOVAL AND INSTALLATION

INITIAL SETUP:

Tools and Special Tools
General Mechanic's Tool Kit (GMTK) (WP 0795, Item 37)

Materials/Parts
Compound (WP 0794, Item 13)
Grease (WP 0794, Item 22)
Cable lock strap - (14) (WP 0796, Item 104)
Cable lock strap - (3) (WP 0796, Item 180)

References
TM 9-2355-106-10
TM 9-2355-106-23P
WP 0786
WP 0782

Equipment Condition
Parking brake set (TM 9-2355-106-10)
Transmission set in NEUTRAL (N) (TM 9-2355-106-10)
Engine off (TM 9-2355-106-10)
MAIN POWER switch off (TM 9-2355-106-10)
Wheels chocked (TM 9-2355-106-10)
Engine hood open and secured (TM 9-2355-106-10)
Left side engine armor plate removed (WP 0597)
Front trailer hookup cover removed (WP 0428)

WARNING

Use extreme caution when testing or working on or around electrical circuits. Always assume that electrical circuits are live. Electrical shock can occur upon contact with voltage high enough to cause current flow through muscles or nerves. On Direct Current (DC) systems, generally 1 milliamp of current can be felt, 5 milliamps can cause severe pain, 15 milliamps can cause loss of muscle control, and 70 milliamps can be fatal. Wear protective clothing; ensure skin, clothing, and surrounding areas are dry; do not wear jewelry; and touch only the insulated, nonmetallic parts of electrical components and testing equipment. To prevent electrical arcing, avoid shorting electrical test probes and jumper wires. Electrical arcing can cause bright flashes of light, capable of causing temporary blindness. If electrical injury occurs, immediately shut off power supply and seek medical assistance. Failure to comply may result in serious injury or death to personnel.

Engine hood is extremely heavy and requires two-person lift. Ensure that there is adequate space in front of the vehicle to open hood completely without pinning or pinching personnel between hood and any other structure. Use extreme care when working under hood and make sure it is properly supported. Failure to comply may result in serious injury or death to personnel.

NOTE

Note wire harness routing and cable lock strap locations for installation.

FRONT TRAILER HOOKUP HARNESS REMOVAL AND INSTALLATION - (CONTINUED)

REMOVAL

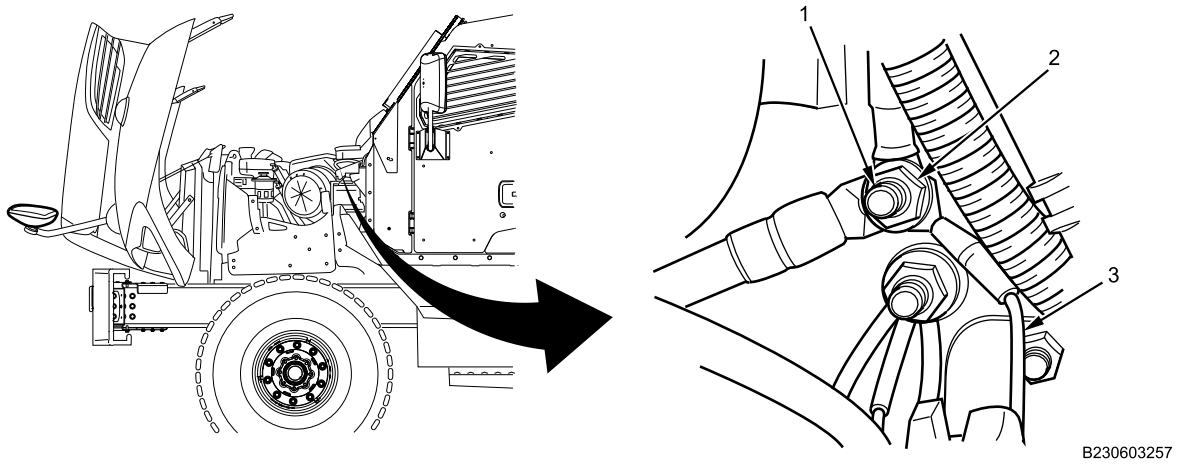

Figure 1. Ground Stud Nut.

1. Remove ground stud nut (Figure 1, Item 2) and front trailer harness ground wire (Figure 1, Item 3) from ground stud (Figure 1, Item 1).

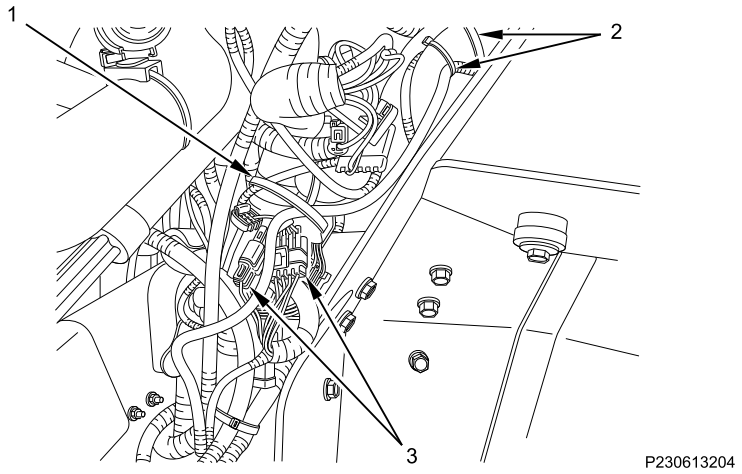

Figure 2. Front Trailer Harness Connectors.

2. Disconnect both front trailer hookup harness connectors (Figure 2, Item 3).
3. Remove and discard three cable lock straps (Figure 2, Item 1 and 2).

FRONT TRAILER HOOKUP HARNESS REMOVAL AND INSTALLATION - (CONTINUED)

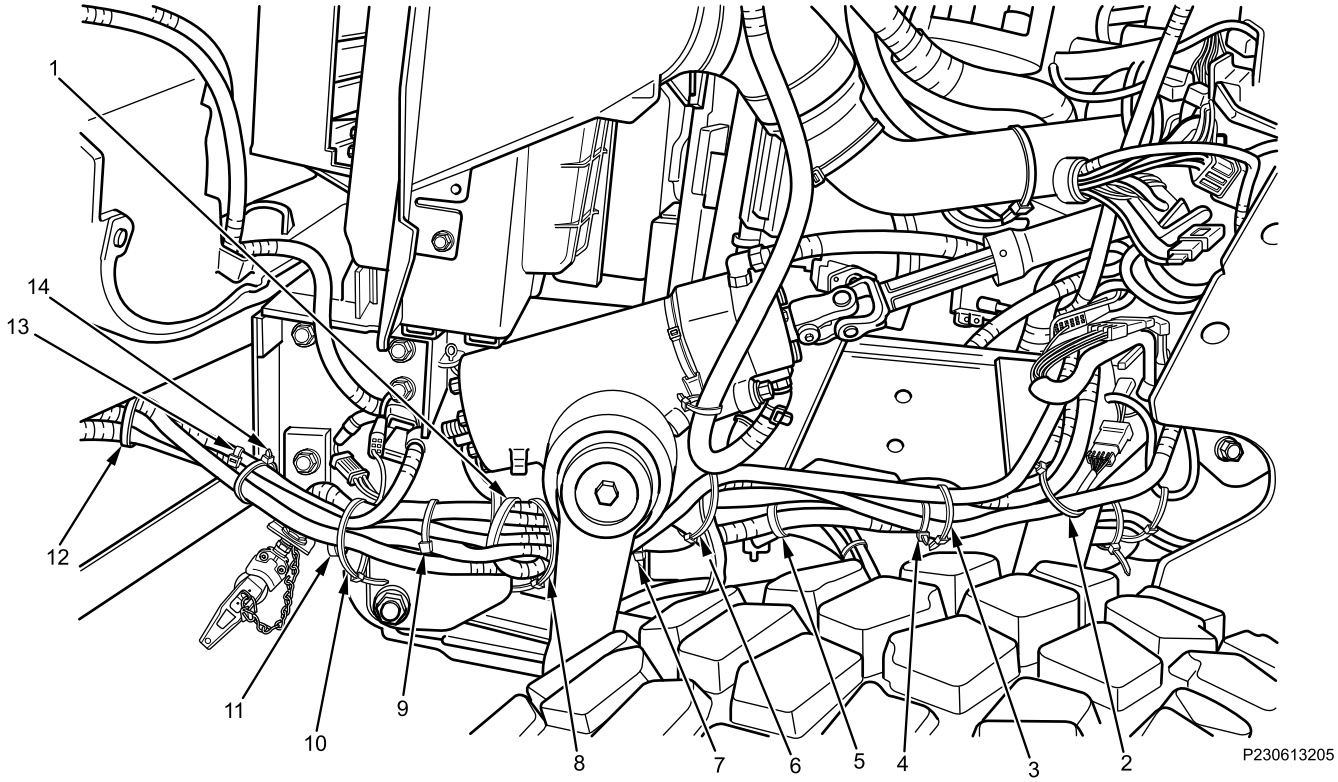

Figure 3. Front Trailer Harness Cable Lock Straps.

4. Remove and discard 14 cable lock straps (Figure 3, Item 1 through 14).

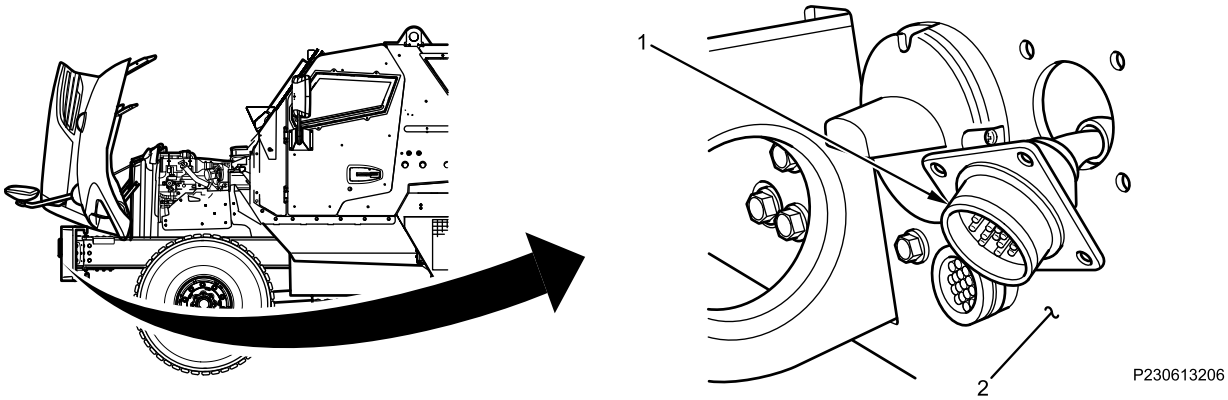

Figure 4. Front Trailer Hookup Harness.

5. Pull front trailer hookup harness (Figure 4, Item 1) out through front bumper (Figure 4, Item 2).

END OF TASK

FRONT TRAILER HOOKUP HARNESS REMOVAL AND INSTALLATION - (CONTINUED)

INSTALLATION

WARNING

Dielectric grease is harmful to skin and eyes. If grease contacts eyes, rinse thoroughly and contact physician if irritation persists. If skin is contacted, wash thoroughly with soap and water. Failure to comply may result in serious injury to personnel.

Corrosion preventive compound is toxic. Use only in well-ventilated area. Do not get in eyes; wear chemical safety goggles and full-face shield when using. Avoid contact with skin and wear rubber or plastic, solvent-resistant gloves. In case of contact, remove contaminated clothing and immediately wash area with soap and water. If compound contacts eyes, flush eyes with large amounts of water for at least 15 minutes and get immediate medical attention. If swallowed, do not induce vomiting; contact a physician immediately. Failure to comply may result in serious injury or death to personnel.

NOTE

Apply dielectric grease to all electrical connectors before installation.

Apply corrosion preventive compound to all bolts and nuts before installation.

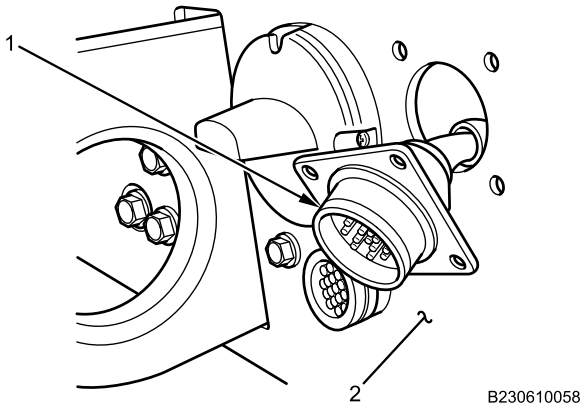

Figure 5. Front Trailer Hookup Harness.

1. Insert front trailer hookup harness (Figure 5, Item 1) through front bumper (Figure 5, Item 2).

FRONT TRAILER HOOKUP HARNESS REMOVAL AND INSTALLATION - (CONTINUED)

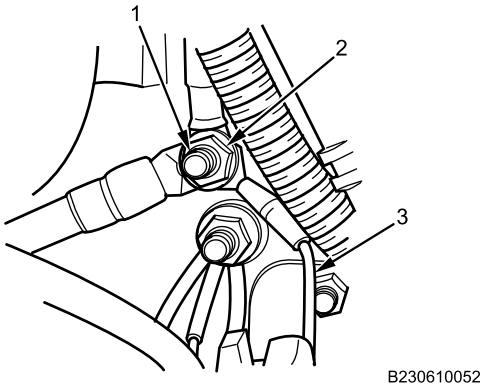

Figure 6. Ground Stud Nut.

2. Install front trailer hookup harness ground wire (Figure 6, Item 3) and ground stud nut (Figure 6, Item 2) on ground stud (Figure 6, Item 1). Tighten nut securely.

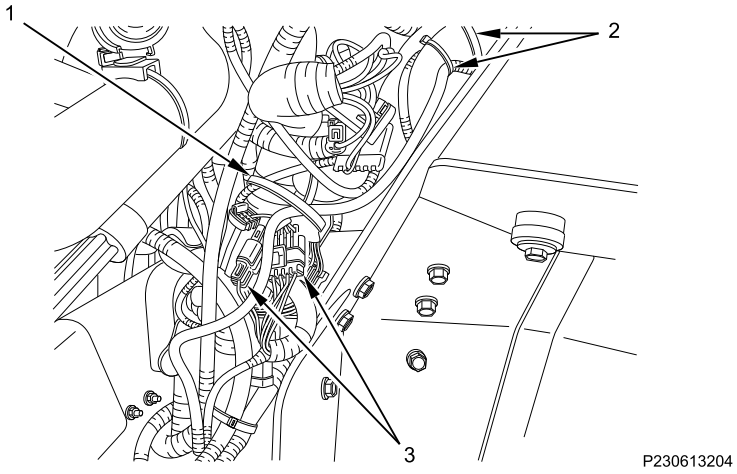

Figure 7. Front Trailer Harness Connectors.

3. Connect both front trailer hookup harness connectors (Figure 7, Item 3).
4. Install three new cable lock straps (Figure 7, Item 1 and 2) to secure front trailer hookup harness.

FRONT TRAILER HOOKUP HARNESS REMOVAL AND INSTALLATION - (CONTINUED)

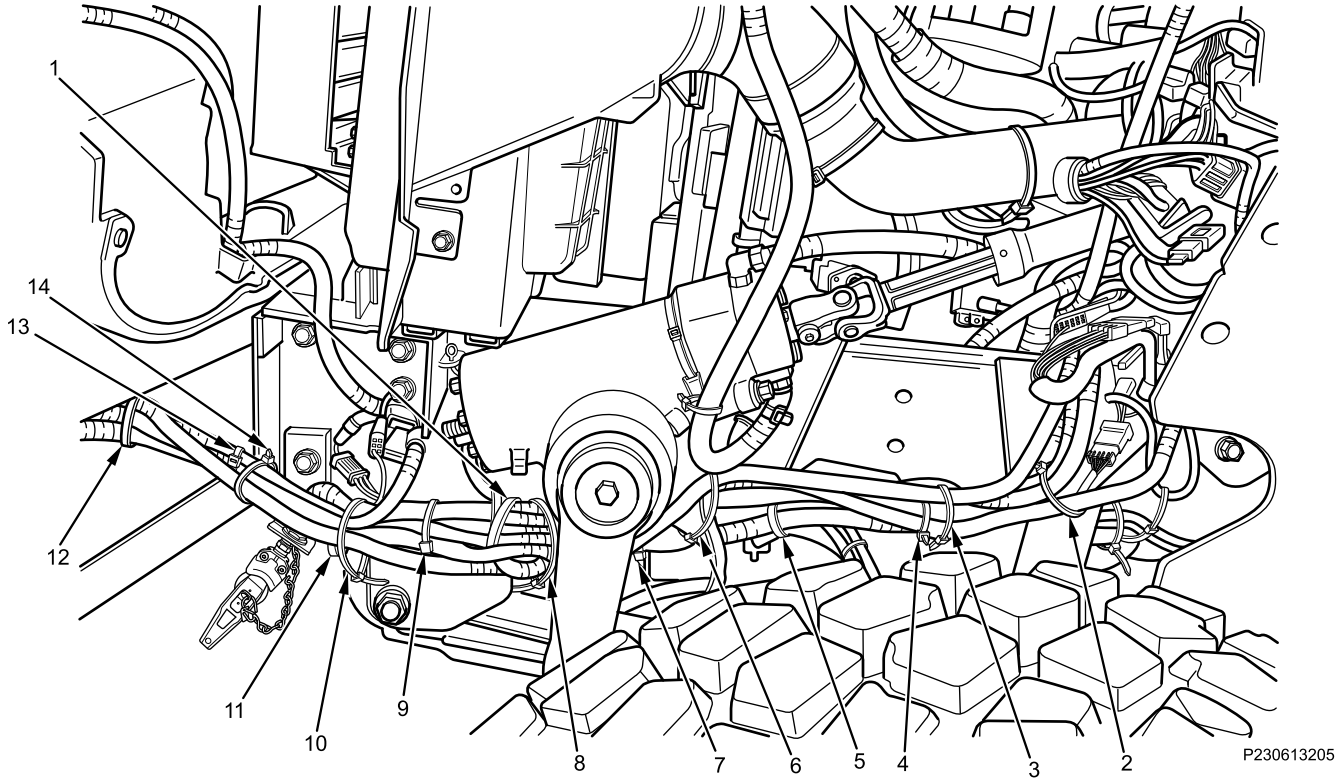

Figure 8. Front Trailer Harness Cable Lock Straps.

5. Install 14 new cable lock straps (Figure 8, Item 1 through 14) to secure front trailer hookup harness.

END OF TASK

FOLLOW-ON MAINTENANCE

1. Install front trailer hookup cover (WP 0428).
2. Turn MAIN POWER switch on (TM 9-2355-106-10).
3. Test trailer hookup connector outputs in trailer and gladhand connections to verify repair (TM 9-2355-106-10).
4. Turn MAIN POWER switch off (TM 9-2355-106-10).
5. Install left side engine armor plate (WP 0597).
6. Close engine hood (TM 9-2355-106-10).
7. Remove wheel chocks (TM 9-2355-106-10).

END OF TASK

END OF WORK PACKAGE

FIELD MAINTENANCE

REAR TRAILER HOOKUP COVER REMOVAL AND INSTALLATION

INITIAL SETUP:

Tools and Special Tools
General Mechanic's Tool Kit (GMTK) (WP 0795, Item 37)

Materials/Parts
Compound (WP 0794, Item 13)
Gloves (WP 0794, Item 18)
Goggles, industrial (WP 0794, Item 20)
Faceshield, industrial (WP 0794, Item 16)

References
TM 9-2355-106-10
TM 9-2355-106-23P
WP 0786
WP 0782

Equipment Condition
Parking brake set (TM 9-2355-106-10)
Transmission set in NEUTRAL (N) (TM 9-2355-106-10)
Engine off (TM 9-2355-106-10)
MAIN POWER switch off (TM 9-2355-106-10)
Wheels chocked (TM 9-2355-106-10)

WARNING

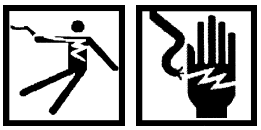

Use extreme caution when testing or working on or around electrical circuits. Always assume that electrical circuits are live. Electrical shock can occur upon contact with voltage high enough to cause current flow through muscles or nerves. On Direct Current (DC) systems, generally 1 milliamp of current can be felt, 5 milliamps can cause severe pain, 15 milliamps can cause loss of muscle control, and 70 milliamps can be fatal. Wear protective clothing; ensure skin, clothing, and surrounding areas are dry; do not wear jewelry; and touch only the insulated, nonmetallic parts of electrical components and testing equipment. To prevent electrical arcing, avoid shorting electrical test probes and jumper wires. Electrical arcing can cause bright flashes of light, capable of causing temporary blindness. If electrical injury occurs, immediately shut off power supply and seek medical assistance. Failure to comply may result in serious injury or death to personnel.

REAR TRAILER HOOKUP COVER REMOVAL AND INSTALLATION - (CONTINUED)

REMOVAL

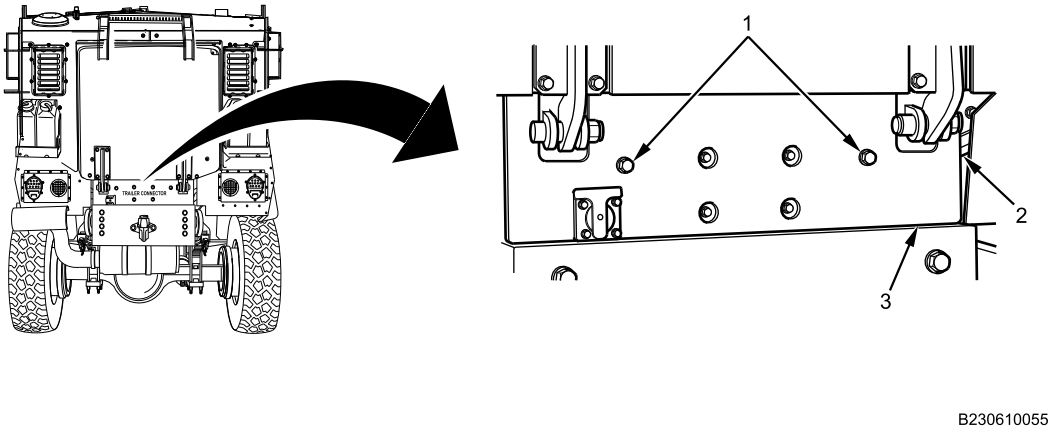

Figure 1. Rear Cover Plate Removal.

1. Remove two rear cover plate bolts (Figure 1, Item 1) securing rear cover plate (Figure 1, Item 3) to vehicle and support (Figure 1, Item 2).
2. Rotate rear cover plate downward to access rear trailer hookup fasteners.

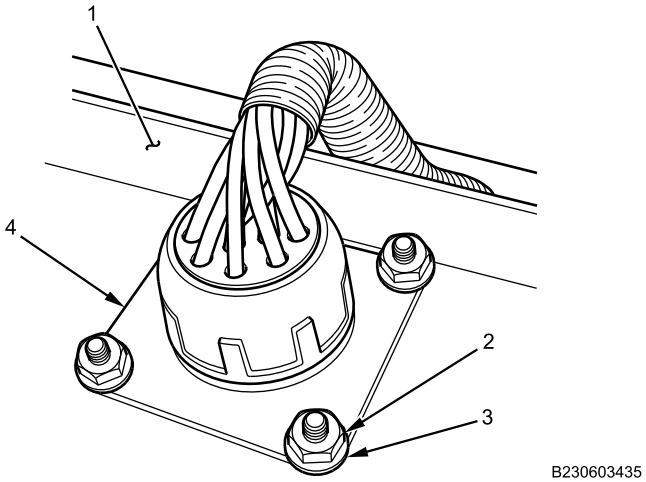

Figure 2. Rear Trailer Hookup Removal.

3. Remove four nuts (Figure 2, Item 2) and four washers (Figure 2, Item 3) securing rear trailer hookup cover and connector (Figure 2, Item 4) to rear cover plate (Figure 2, Item 1).

REAR TRAILER HOOKUP COVER REMOVAL AND INSTALLATION - (CONTINUED)

4. Remove four bolts (Figure 3, Item 3) and hookup cover (Figure 3, Item 1) from rear cover plate (Figure 3, Item 2).

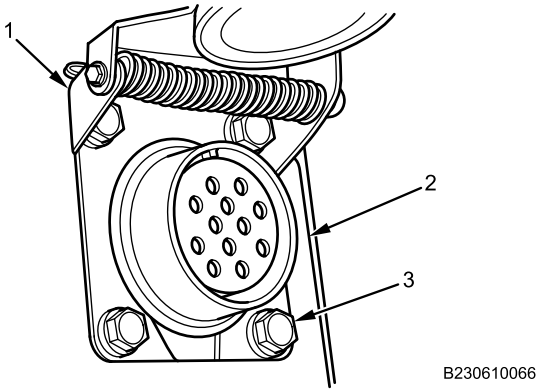

Figure 3. Rear Trailer Hookup Cover.

END OF TASK

INSTALLATION

WARNING

Corrosion preventive compound is toxic. Use only in well-ventilated area. Do not get in eyes; wear chemical safety goggles and full-face shield when using. Avoid contact with skin and wear rubber or plastic, solvent-resistant gloves. In case of contact, remove contaminated clothing and immediately wash area with soap and water. If compound contacts eyes, flush eyes with large amounts of water for at least 15 minutes and get immediate medical attention. If swallowed, do not induce vomiting; contact a physician immediately. Failure to comply may result in serious injury or death to personnel.

NOTE

Apply corrosion preventive compound to all nuts, screws, and bolts before installation.

REAR TRAILER HOOKUP COVER REMOVAL AND INSTALLATION - (CONTINUED)

1. With locating pin (Figure 4, Item 2) positioned at top, install hookup cover (Figure 4, Item 1) on rear cover plate (Figure 4, Item 3) with four bolts (Figure 4, Item 4).

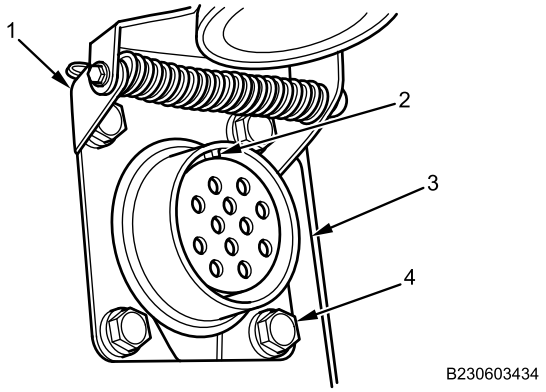

Figure 4. Rear Trailer Hookup Cover.

2. Install four washers (Figure 5, Item 3) and four nuts (Figure 5, Item 2) and tighten securely to secure hookup cover and connector (Figure 5, Item 4) to rear cover plate (Figure 5, Item 1).

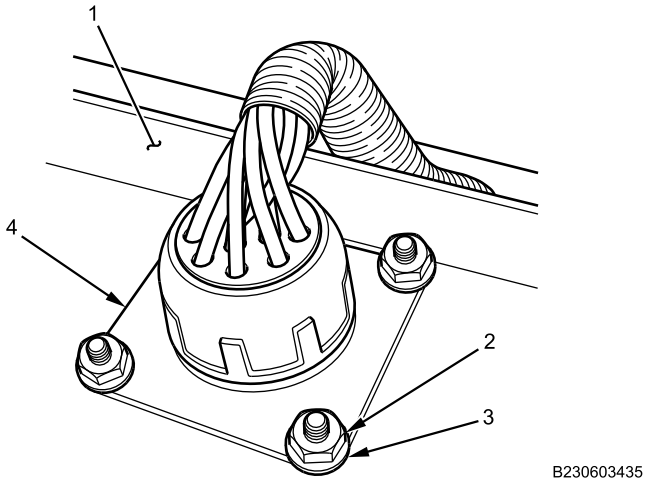

Figure 5. Rear Trailer Hookup Installation.

REAR TRAILER HOOKUP COVER REMOVAL AND INSTALLATION - (CONTINUED)

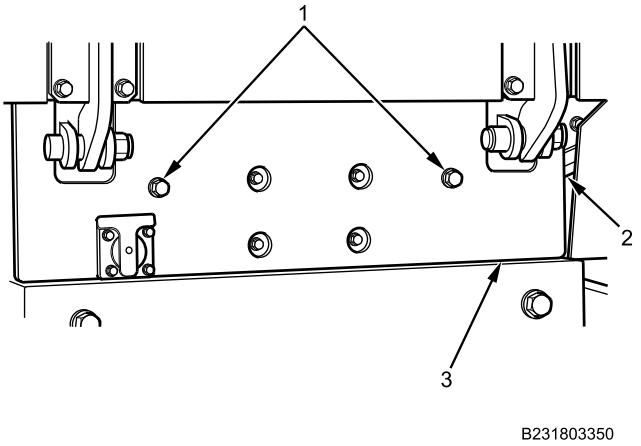

Figure 6. Rear Cover Plate Installation.

3. Rotate rear cover plate (Figure 6, Item 3) upward into position.
4. Install rear cover plate (Figure 6, Item 3) on vehicle (Figure 6, Item 2) with two bolts (Figure 6, Item 1). Tighten bolts securely.

END OF TASK

FOLLOW-ON MAINTENANCE

1. Verify rear trailer hookup operation (TM 9-2355-106-10).
2. Remove wheel chocks (TM 9-2355-106-10).

END OF TASK

END OF WORK PACKAGE

FIELD MAINTENANCE

REAR TRAILER HOOKUP HARNESS REMOVAL AND INSTALLATION

INITIAL SETUP:

Tools and Special Tools
General Mechanic's Tool Kit (GMTK) (WP 0795, Item 37)

Materials/Parts
Grease (WP 0794, Item 22)
Cable lock strap - (2) (WP 0796, Item 120)

References
TM 9-2355-106-10
TM 9-2355-106-23P
WP 0782

Equipment Condition
Parking brake set (TM 9-2355-106-10)
Transmission set in NEUTRAL (N) (TM 9-2355-106-10)
Engine off (TM 9-2355-106-10)
MAIN POWER switch off (TM 9-2355-106-10)
Wheels chocked (TM 9-2355-106-10)
Rear trailer hookup cover removed (WP 0430)

WARNING

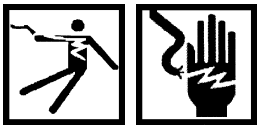

Use extreme caution when testing or working on or around electrical circuits. Always assume that electrical circuits are live. Electrical shock can occur upon contact with voltage high enough to cause current flow through muscles or nerves. On Direct Current (DC) systems, generally 1 milliamp of current can be felt, 5 milliamps can cause severe pain, 15 milliamps can cause loss of muscle control, and 70 milliamps can be fatal. Wear protective clothing; ensure skin, clothing, and surrounding areas are dry; do not wear jewelry; and touch only the insulated, nonmetallic parts of electrical components and testing equipment. To prevent electrical arcing, avoid shorting electrical test probes and jumper wires. Electrical arcing can cause bright flashes of light, capable of causing temporary blindness. If electrical injury occurs, immediately shut off power supply and seek medical assistance. Failure to comply may result in serious injury or death to personnel.

NOTE

Label all wires before removal.

Note wire harness routing for installation.

Remove cable lock straps as necessary to perform procedure. Note position and size of cable lock straps to aid installation.

REAR TRAILER HOOKUP HARNESS REMOVAL AND INSTALLATION - (CONTINUED)

REMOVAL

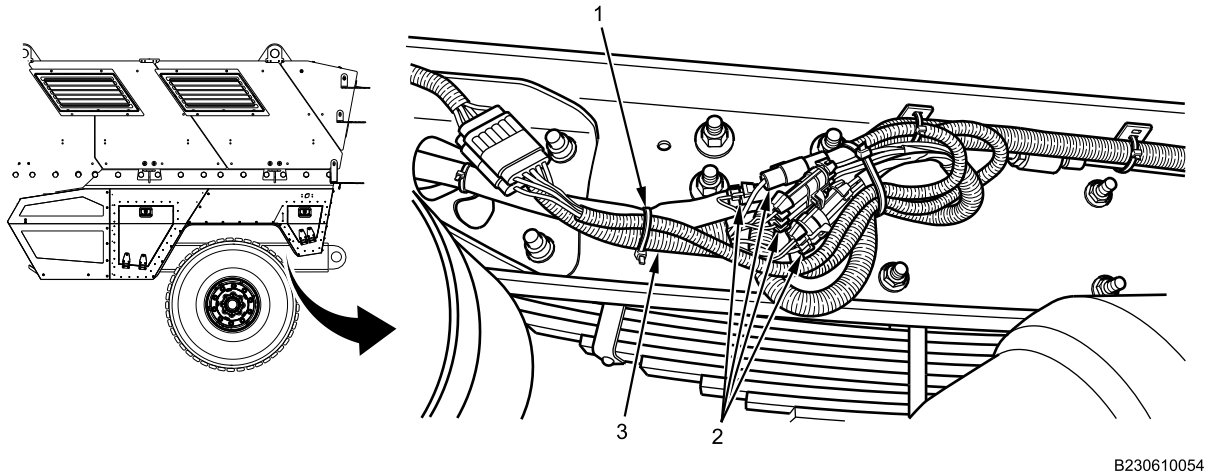

Figure 1. Rear Trailer Hookup Harness Connectors.

1. Remove and discard cable lock strap (Figure 1, Item 1).
2. Disconnect four rear trailer hookup harness connectors (Figure 1, Item 2), and remove rear trailer hookup harness (Figure 1, Item 3).

END OF TASK

INSTALLATION

WARNING

Dielectric grease is harmful to skin and eyes. If grease contacts eyes, rinse thoroughly and contact physician if irritation persists. If skin is contacted, wash thoroughly with soap and water. Failure to comply may result in serious injury to personnel.

NOTE

Apply dielectric grease to all electrical contacts before installation.

REAR TRAILER HOOKUP HARNESS REMOVAL AND INSTALLATION - (CONTINUED)

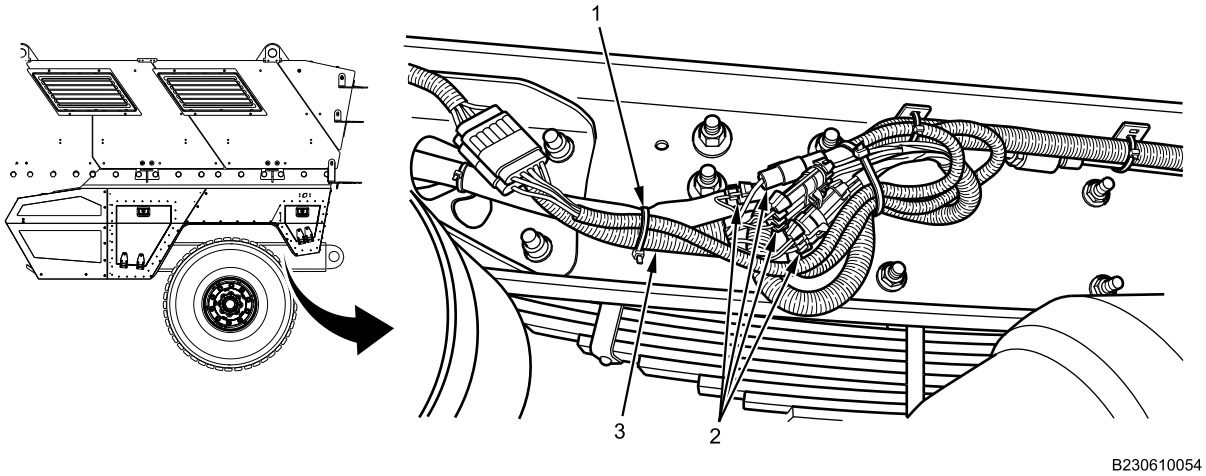

Figure 2. Rear Trailer Hookup Harness Connectors.

1. Position rear trailer hookup harness (Figure 2, Item 3) and connect four rear trailer hookup harness connectors (Figure 2, Item 2).
2. Install new cable lock strap (Figure 2, Item 1) and tighten securely.

END OF TASK

FOLLOW-ON MAINTENANCE

1. Install rear trailer hookup cover (WP 0430).
2. Turn MAIN POWER switch on (TM 9-2355-106-10).
3. Verify trailer light operation (TM 9-2355-106-10).
4. Turn MAIN POWER switch off (TM 9-2355-106-10).
5. Remove wheel chocks (TM 9-2355-106-10).

END OF TASK

END OF WORK PACKAGE

FIELD MAINTENANCE

REAR DOOR/RAMP HYDRAULIC SYSTEM CONTROL HARNESS REMOVAL AND INSTALLATION

INITIAL SETUP:

Tools and Special Tools
General Mechanic's Tool Kit (GMTK) (WP 0795, Item 37)
Electrical Contact Tool Kit (WP 0795, Item 30)

Materials/Parts
Grease (WP 0794, Item 22)
Wire tags (WP 0794, Item 33)
Fastener - (3) (WP 0794, Item 17)
Cable lock strap - (15) (WP 0796, Item 120)

References
TM 9-2355-106-10
TM 9-2355-106-23P
WP 0786
WP 0782

Equipment Condition
Parking brake set (TM 9-2355-106-10)
Transmission set in NEUTRAL (N) (TM 9-2355-106-10)
Engine off (TM 9-2355-106-10)
MAIN POWER switch off (TM 9-2355-106-10)
Wheels chocked (TM 9-2355-106-10)
Right cabin door secured safely open (WP 0608)
Right A-pillar cover trim removed (WP 0642)
Instrument panel right side closeout removed (WP 0580)
Rear door/ramp open (TM 9-2355-106-10)
Rear door hydraulic pump cover removed (WP 0690 [Push-Type Operation])(WP 0691 [Pull-Type Operation])

WARNING

Use extreme caution when testing or working on or around electrical circuits. Always assume that electrical circuits are live. Electrical shock can occur upon contact with voltage high enough to cause current flow through muscles or nerves. On Direct Current (DC) systems, generally 1 milliamp of current can be felt, 5 milliamps can cause severe pain, 15 milliamps can cause loss of muscle control, and 70 milliamps can be fatal. Wear protective clothing; ensure skin, clothing, and surrounding areas are dry; do not wear jewelry; and touch only the insulated, nonmetallic parts of electrical components and testing equipment. To prevent electrical arcing, avoid shorting electrical test probes and jumper wires. Electrical arcing can cause bright flashes of light, capable of causing temporary blindness. If electrical injury occurs, immediately shut off power supply and seek medical assistance. Failure to comply may result in serious injury or death to personnel.

Cabin door must be secured in the open position by using heavy duty straps to prevent accidental closure during vehicle maintenance. Pull door hinge pin prior to securing door open. Failure to comply may result in serious injury or death to personnel.

NOTE

Remove cable lock straps as necessary to perform procedure. Note position and size of cable lock straps to aid installation.

REAR DOOR/RAMP HYDRAULIC SYSTEM CONTROL HARNESS REMOVAL AND INSTALLATION - (CONTINUED)

REMOVAL

1. Disconnect rear door/ramp control harness connector (Figure 1, Item 1) from rear door/ramp hydraulic system harness connector (Figure 1, Item 2) and rear door/ramp hydraulic system harness (Figure 1, Item 3).

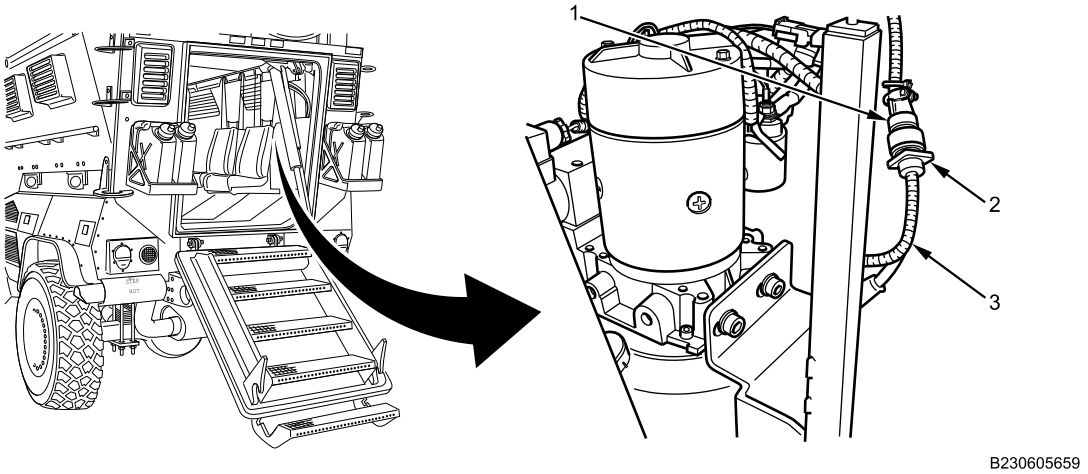

Figure 1. Rear Door/Ramp Control Harness Connector.

2. Remove three bolts (Figure 2, Item 4), flat washers (Figure 2, Item 1), and right rear cabin molding cover (Figure 2, Item 2) from right rear molding channel (Figure 2, Item 3).

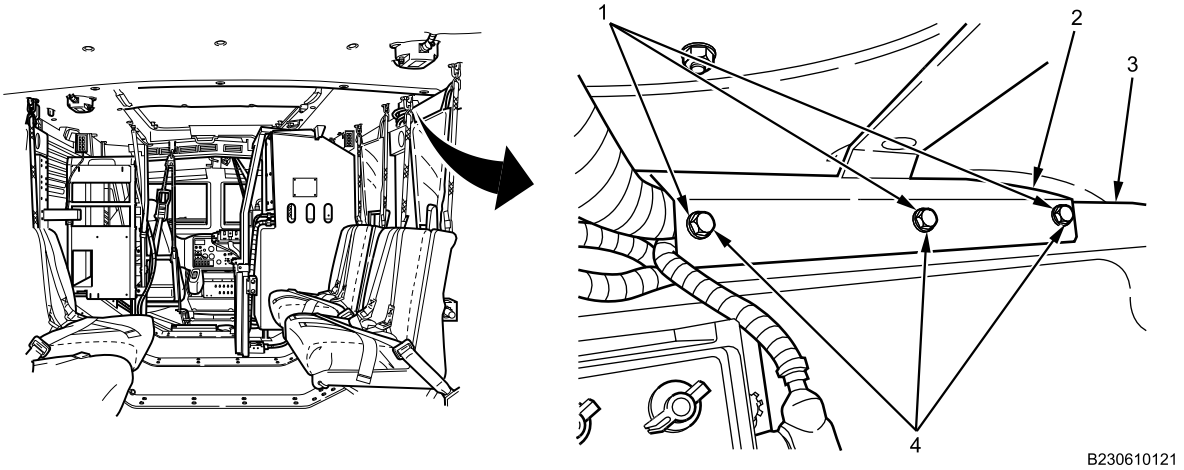

Figure 2. Right Rear Cabin Molding Cover.

3. Grasp tension lever (Figure 3, Item 1), lift up on tension latch (Figure 3, Item 2), and lower tension lever.

REAR DOOR/RAMP HYDRAULIC SYSTEM CONTROL HARNESS REMOVAL AND INSTALLATION - (CONTINUED)

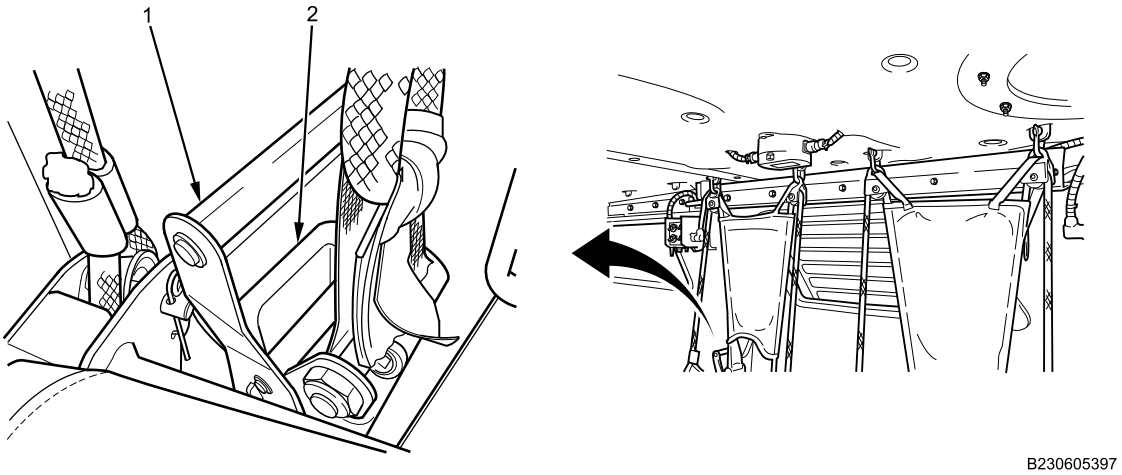

Figure 3. Seat Rope Tension Latch.

4. With tension lever (Figure 4, Item 1) in down position, pull down on tension latch (Figure 4, Item 2) to release tension on seat rope.

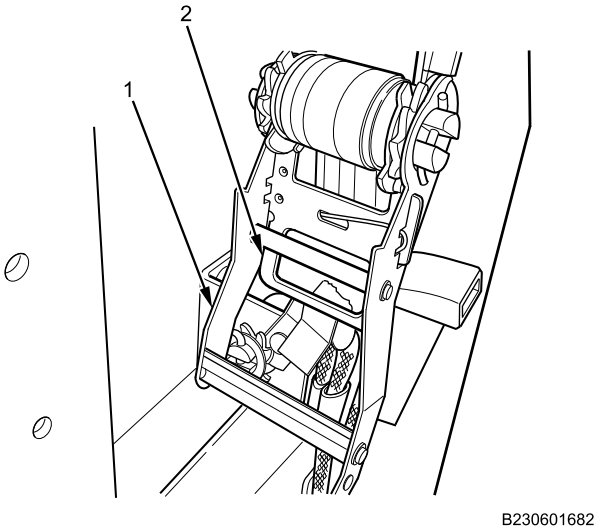

Figure 4. Seat Rope Tension Lever.

REAR DOOR/RAMP HYDRAULIC SYSTEM CONTROL HARNESS REMOVAL AND INSTALLATION - (CONTINUED)

5. Remove five bolts (Figure 5, Item 4), flat washers (Figure 5, Item 2), and right center cabin molding cover (Figure 5, Item 1) from right center molding channel (Figure 5, Item 3).

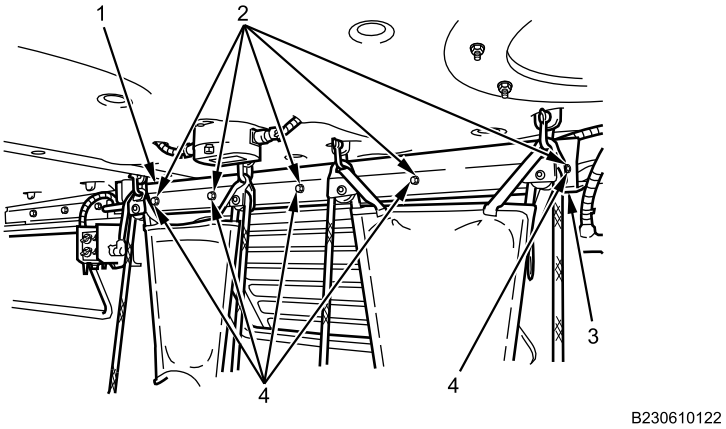

Figure 5. Right Center Cabin Molding.

6. Remove three bolts (Figure 6, Item 1), flat washers (Figure 6, Item 4), and right front cabin molding cover (Figure 6, Item 2) from front molding channel (Figure 6, Item 3).

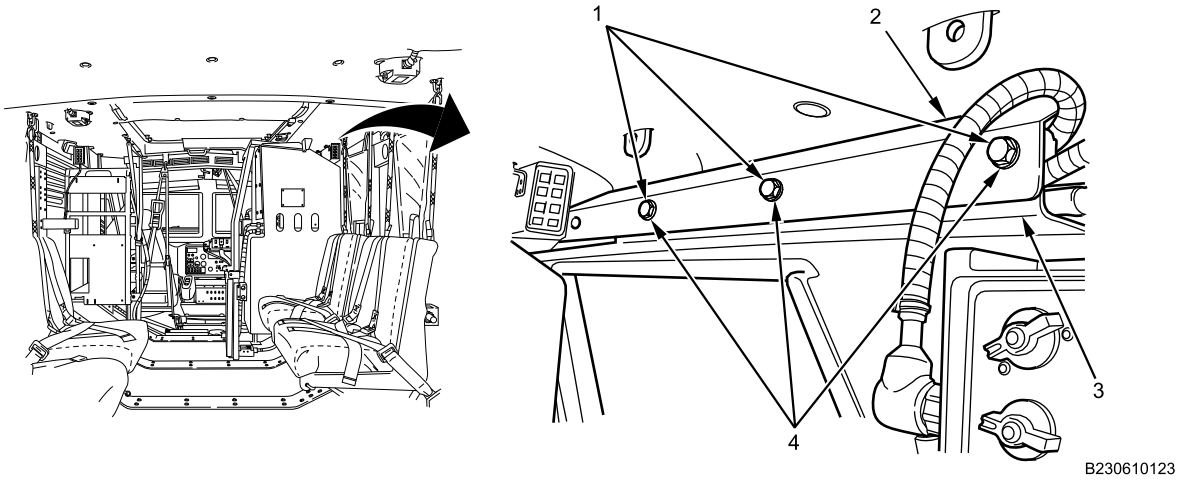

Figure 6. Right Front Cabin Molding.

7. Remove three fasteners (Figure 7, Item 1), and right front door molding (Figure 7, Item 2). Discard fasteners.

REAR DOOR/RAMP HYDRAULIC SYSTEM CONTROL HARNESS REMOVAL AND INSTALLATION - (CONTINUED)

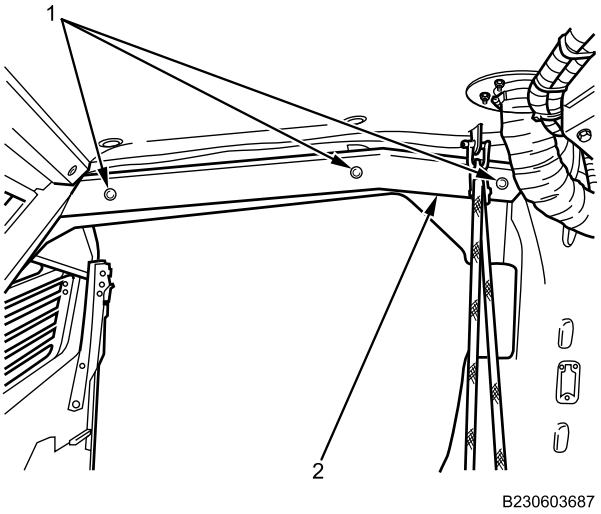

Figure 7. Right Front Door Molding.

8. Disconnect rear door/ramp control harness connector (Figure 8, Item 2) from instrument panel harness connector (Figure 8, Item 1). Remove and discard cable lock straps.

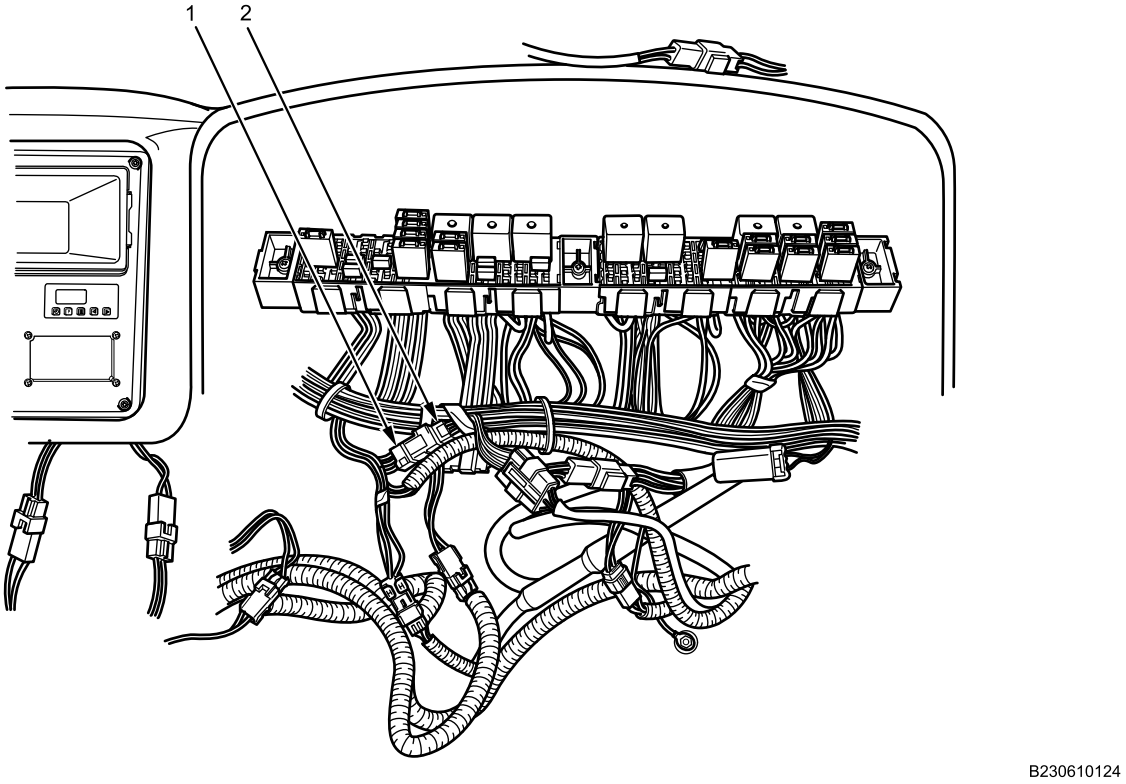

Figure 8. Rear Door/Ramp Control Harness Connector.

REAR DOOR/RAMP HYDRAULIC SYSTEM CONTROL HARNESS REMOVAL AND INSTALLATION - (CONTINUED)

CAUTION

Identify, note location of terminals, and label wires with wire tags before removing from connector body to aid in installation. Failure to comply may result in damage to electrical system.

NOTE

Rear door/ramp control to IP harness connector must be removed to allow removal of rear door/ramp control harness from above right front door.

9. Unlock two wire terminal retaining tabs (Figure 9, Item 2).

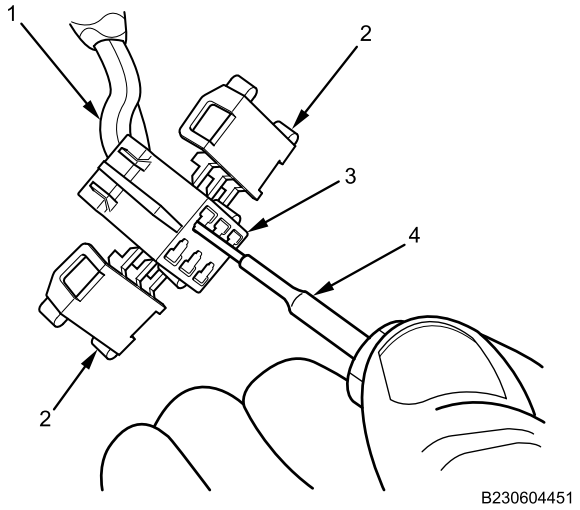

Figure 9. Rear Door/Ramp Control Harness to IP Harness Connector Removal.

10. Using contact removal tool (Figure 9, Item 4), unlock three terminal pins (Figure 9, Item 3), and remove three rear door/ramp control wires (Figure 9, Item 1) from connector body.
11. Remove cable lock straps. Remove rear door/ramp control harness.

END OF TASK

REAR DOOR/RAMP HYDRAULIC SYSTEM CONTROL HARNESS REMOVAL AND INSTALLATION - (CONTINUED)

INSTALLATION

WARNING

Dielectric grease is harmful to skin and eyes. If grease contacts eyes, rinse thoroughly and contact physician if irritation persists. If skin is contacted, wash thoroughly with soap and water. Failure to comply may result in serious injury to personnel.

CAUTION

Install rear door/ramp control wires according to wire tag labeling. Failure to comply may result in damage to electrical system.

NOTE

Apply dielectric grease to all rear door/ramp control harness electrical connections.

If installing a new harness, remove rear door/ramp control to IP harness connector, prior to positioning harness above right front door. Refer to steps 5 and 7 of rear door/ramp control harness removal.

1. Position rear door/ramp control harness along right harness channel. Install three rear door/ramp control wires (Figure 10, Item 2) in connector body (Figure 10, Item 3). Close and latch terminal retaining tabs (Figure 10, Item 1).

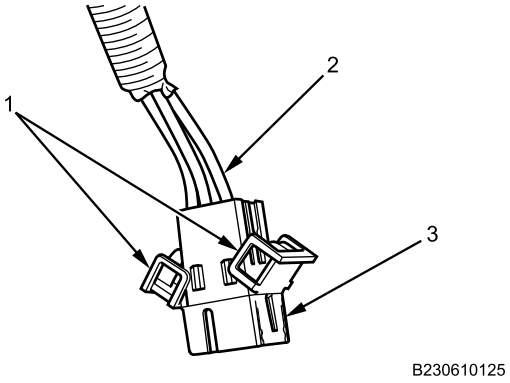

Figure 10. Rear Door/Ramp Control Harness Connector Installation.

REAR DOOR/RAMP HYDRAULIC SYSTEM CONTROL HARNESS REMOVAL AND INSTALLATION - (CONTINUED)

2. Connect rear door/ramp control harness connector (Figure 11, Item 2) to instrument panel harness connector (Figure 11, Item 1).

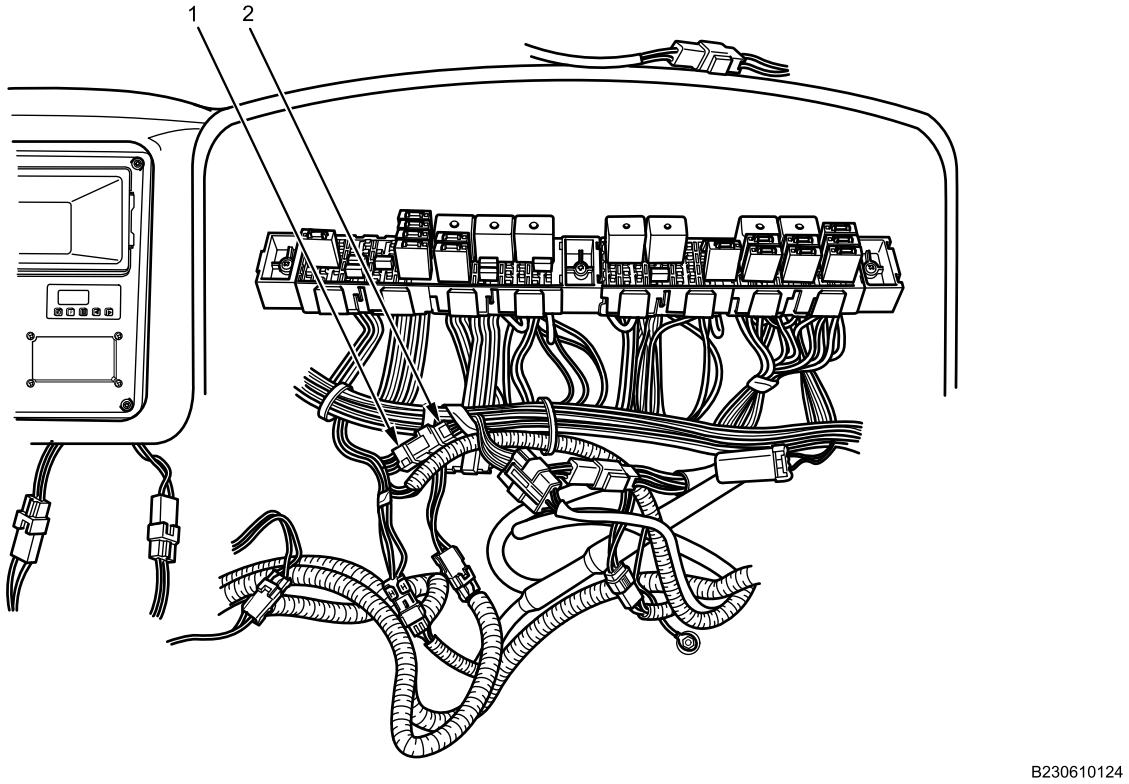

Figure 11. Rear Door/Ramp Control Harness Connector.

3. Install all cable lock straps and tighten securely.
4. Install right front door molding (Figure 12, Item 2) with three new fasteners (Figure 12, Item 1).

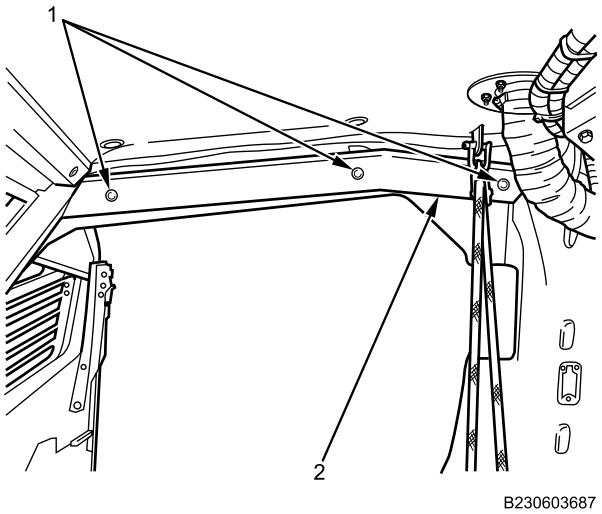

Figure 12. Right Front Door Molding.

5. Install right front cabin molding (Figure 13, Item 2) on front moulding channel (Figure 13, Item 3) with three flat washers (Figure 13, Item 4) and bolts (Figure 13, Item 1). Tighten bolts securely.

REAR DOOR/RAMP HYDRAULIC SYSTEM CONTROL HARNESS REMOVAL AND INSTALLATION - (CONTINUED)

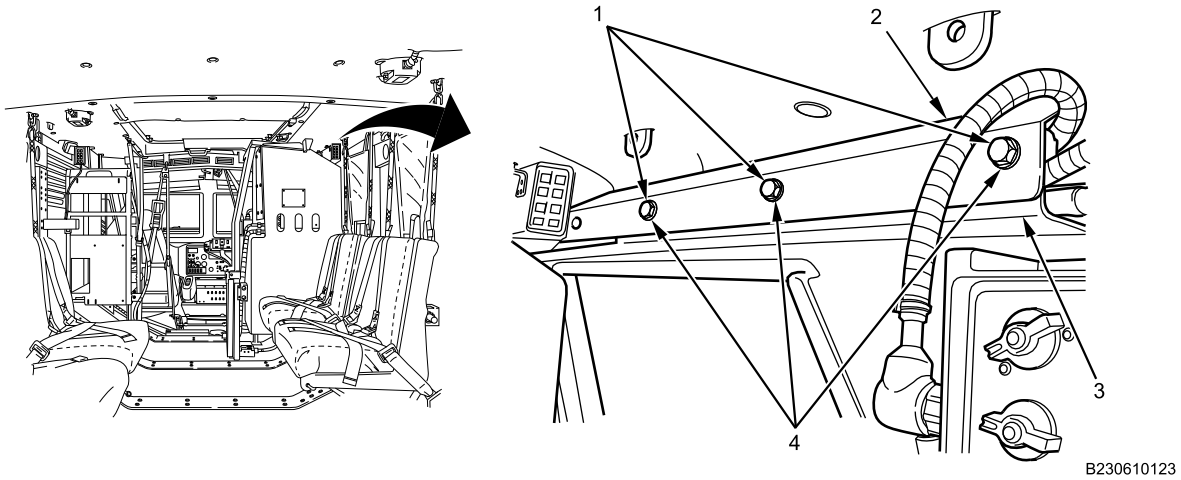

Figure 13. Right Front Cabin Molding.

6. Install right center cabin molding (Figure 14, Item 1) on center moulding channel (Figure 14, Item 3) with five flat washers (Figure 14, Item 1) and bolts (Figure 14, Item 4). Tighten bolts securely.

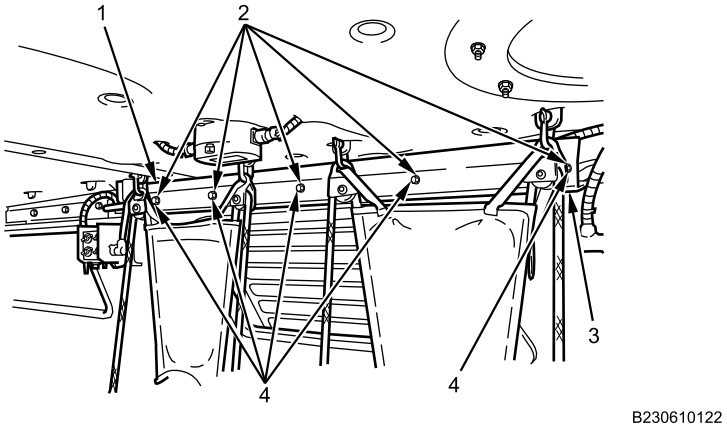

Figure 14. Right Center Cabin Molding.

REAR DOOR/RAMP HYDRAULIC SYSTEM CONTROL HARNESS REMOVAL AND INSTALLATION - (CONTINUED)

7. With tension lever (Figure 15, Item 1) in the down position, pull on strap to tighten slack.

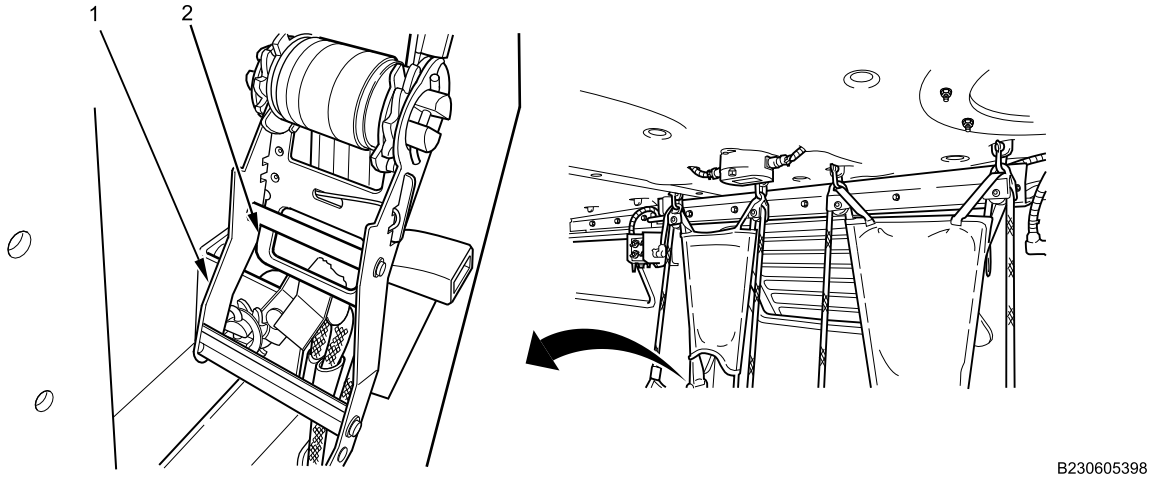

Figure 15. Seat Rope Tension Lever.

8. Grasp tension lever (Figure 15, Item 1), pull down on tension latch (Figure 15, Item 2), and ratchet tension lever (Figure 15, Item 1) until rope is tight.
9. Place tension lever (Figure 16, Item 1) in up position and tension latch (Figure 16, Item 2) in the down position.

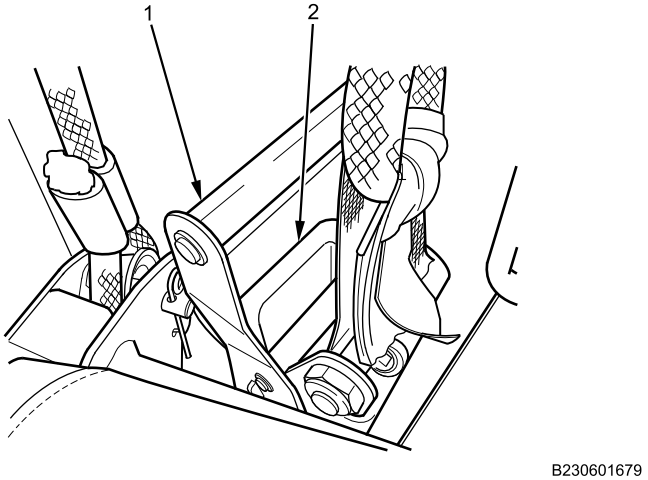

Figure 16. Seat Rope Tension Latch.

10. Install right rear cabin molding cover (Figure 17, Item 2) on right rear molding channel (Figure 17, Item 3) with three flat washers (Figure 17, Item 1) and bolts (Figure 17, Item 4). Tighten bolts securely.

REAR DOOR/RAMP HYDRAULIC SYSTEM CONTROL HARNESS REMOVAL AND INSTALLATION - (CONTINUED)

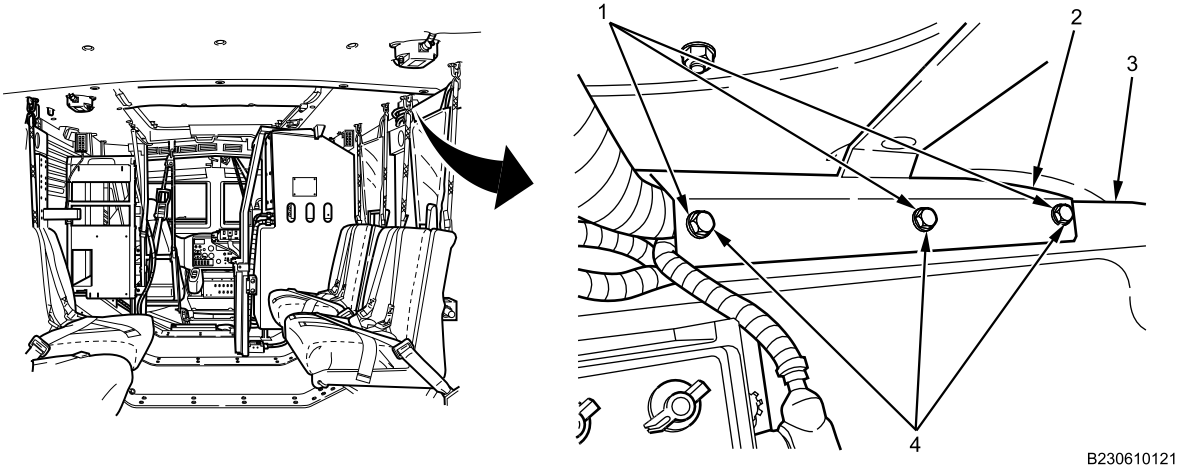

Figure 17. Right Rear Cabin Molding Cover.

11. Connect rear door/ramp control harness connector (Figure 18, Item 1) to rear door/ramp hydraulic system harness connector (Figure 18, Item 2) and rear door/ramp hydraulic system harness (Figure 18, Item 3). Install all cable lock straps and tighten securely.

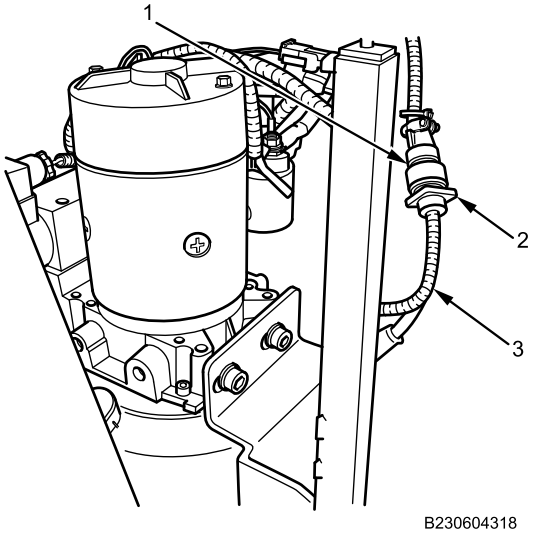

Figure 18. Rear Door/Ramp Hydraulic System Harness Connector.

END OF TASK

REAR DOOR/RAMP HYDRAULIC SYSTEM CONTROL HARNESS REMOVAL AND INSTALLATION - (CONTINUED)

FOLLOW-ON MAINTENANCE

1. Install rear door hydraulic pump cover (WP 0690 [Push-Type Operation]) or (WP 0691 [Pull-Type Operation])
2. Turn MAIN POWER switch on (TM 9-2355-106-10)
3. Verify operation of rear door/ramp (TM 9-2355-106-10)
4. Close rear door/ramp (TM 9-2355-106-10).
5. Turn MAIN POWER switch off (TM 9-2355-106-10)
6. Install instrument panel right side closeout (WP 0580).
7. Install right A-pillar cover trim (WP 0642).
8. Remove straps and close right cabin door (WP 0608).
9. Remove wheel chocks (TM 9-2355-106-10).

END OF TASK

END OF WORK PACKAGE

FIELD MAINTENANCE

REAR DOOR/RAMP HYDRAULIC SYSTEM HARNESS REMOVAL AND INSTALLATION (PUSH-TYPE OPERATION)

INITIAL SETUP:

Tools and Special Tools
General Mechanic's Tool Kit (GMTK) (WP 0795, Item 37)

Materials/Parts
Grease (WP 0794, Item 22)
Wire tags (WP 0794, Item 33)
Cable lock strap - (5) (WP 0796, Item 120)
Lockwasher - (2) (WP 0796, Item 9)

References
TM 9-2355-106-10
TM 9-2355-106-23P
WP 0786
WP 0782

Equipment Condition
Parking brake set (TM 9-2355-106-10)
Transmission set in NEUTRAL (N) (TM 9-2355-106-10)
Engine off (TM 9-2355-106-10)
MAIN POWER switch off (TM 9-2355-106-10)
Wheels chocked (TM 9-2355-106-10)
Rear door/ramp open (TM 9-2355-106-10)
Rear door hydraulic pump cover removed (WP 0690)

WARNING

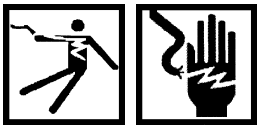

Use extreme caution when testing or working on or around electrical circuits. Always assume that electrical circuits are live. Electrical shock can occur upon contact with voltage high enough to cause current flow through muscles or nerves. On Direct Current (DC) systems, generally 1 milliamp of current can be felt, 5 milliamps can cause severe pain, 15 milliamps can cause loss of muscle control, and 70 milliamps can be fatal. Wear protective clothing; ensure skin, clothing, and surrounding areas are dry; do not wear jewelry; and touch only the insulated, nonmetallic parts of electrical components and testing equipment. To prevent electrical arcing, avoid shorting electrical test probes and jumper wires. Electrical arcing can cause bright flashes of light, capable of causing temporary blindness. If electrical injury occurs, immediately shut off power supply and seek medical assistance. Failure to comply may result in serious injury or death to personnel.

NOTE

Remove cable lock straps as necessary to perform procedure. Note position and size of cable lock straps to aid installation.

REAR DOOR/RAMP HYDRAULIC SYSTEM HARNESS REMOVAL AND INSTALLATION (PUSH-TYPE OPERATION) - (CONTINUED)

REMOVAL

CAUTION

Identify, note location, and label wires with wire tags before removing to aid in installation. Failure to comply may result in damage to electrical system.

1. Remove nut (Figure 1, Item 4), lockwasher, ground wire (Figure 1, Item 5), and ground cable (Figure 1, Item 6) from door/ramp motor (Figure 1, Item 3). Lockwasher hidden. Discard lockwasher.

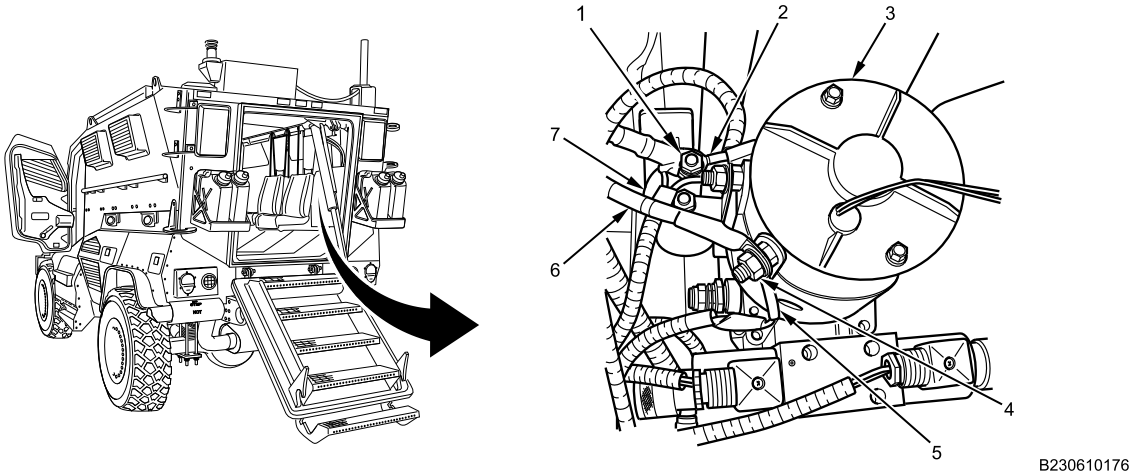

Figure 1. Rear Door/Ramp Motor Ground and Solenoid Wires.

2. Remove nut (Figure 1, Item 1), lockwasher, and solenoid battery wire (Figure 1, Item 2) from solenoid (Figure 1, Item 7). Lockwasher hidden. Discard lockwasher.
3. Disconnect control wire harness (Figure 2, Item 5) from solenoid (Figure 2, Item 4).

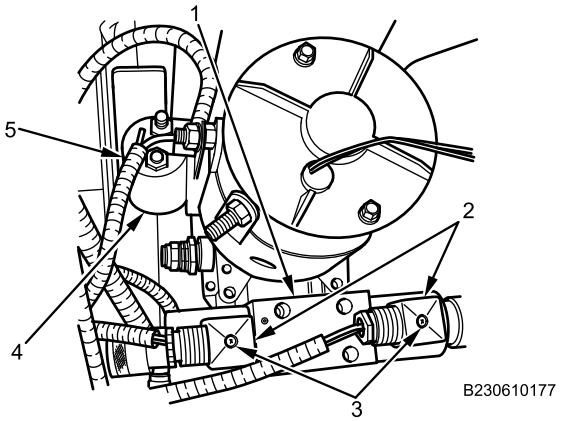

Figure 2. Rear Door/Ramp Control Connection.

4. Remove two screws (Figure 2, Item 3) and two connectors (Figure 2, Item 2) from hydraulic valve (Figure 2, Item 1).

REAR DOOR/RAMP HYDRAULIC SYSTEM HARNESS REMOVAL AND INSTALLATION (PUSH-TYPE OPERATION) - (CONTINUED)

5. Disconnect rear door/ramp hydraulic system harness connector (Figure 3, Item 2) from rear door/ramp control harness connector (Figure 3, Item 1).

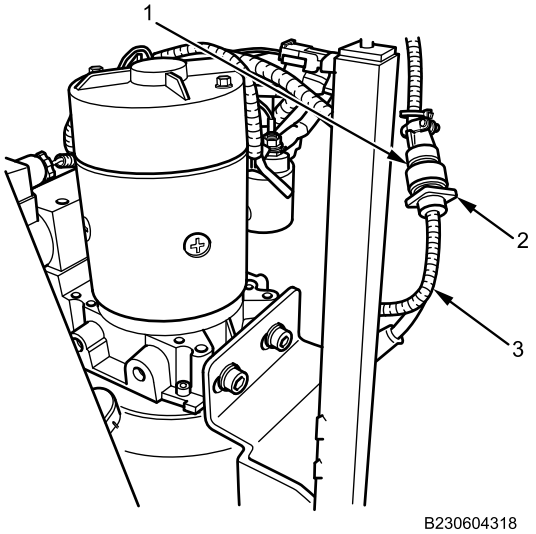

Figure 3. Rear Door/Ramp Hydraulic System Harness Connector.

6. Remove rear door/ramp hydraulic system harness.

END OF TASK

REAR DOOR/RAMP HYDRAULIC SYSTEM HARNESS REMOVAL AND INSTALLATION (PUSH-TYPE OPERATION) - (CONTINUED)

INSTALLATION

WARNING

Dielectric grease is harmful to skin and eyes. If grease contacts eyes, rinse thoroughly and contact physician if irritation persists. If skin is contacted, wash thoroughly with soap and water. Failure to comply may result in serious injury to personnel.

NOTE

Apply dielectric grease to all rear door/ramp hydraulic system harness electrical connections before installation.

1. Position rear door/ramp hydraulic system harness (Figure 4, Item 3). Connect rear door/ramp hydraulic system harness connector (Figure 4, Item 2) to rear door/ramp control harness connector (Figure 4, Item 1).

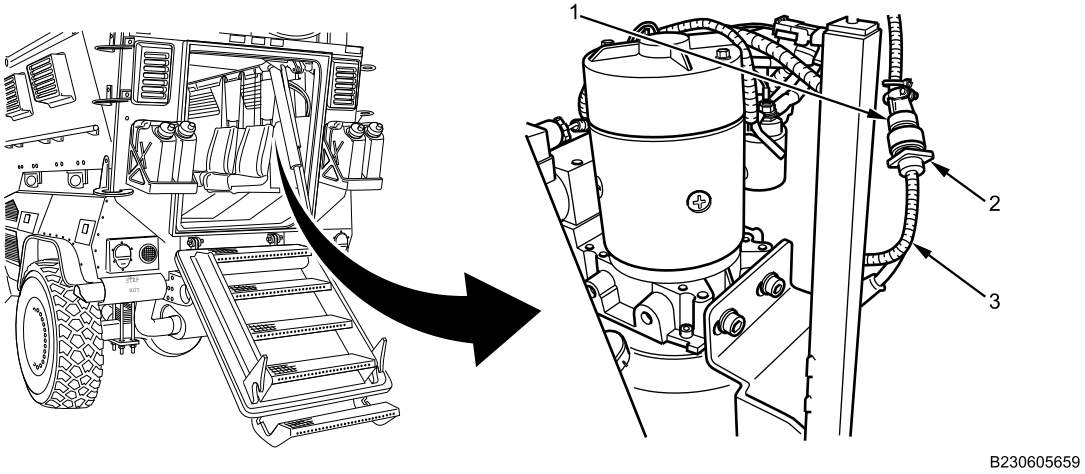

Figure 4. Rear Door/Ramp Hydraulic System Harness Connector.

REAR DOOR/RAMP HYDRAULIC SYSTEM HARNESS REMOVAL AND INSTALLATION (PUSH-TYPE OPERATION) - (CONTINUED)

CAUTION

Install rear door/ramp hydraulic system wires as labeled during removal procedures. Failure to comply may result in damage to electrical system.

2. Install control wire harness (Figure 5, Item 2) and two screws (Figure 5, Item 3) on hydraulic valve (Figure 5, Item 1). Tighten screws securely.

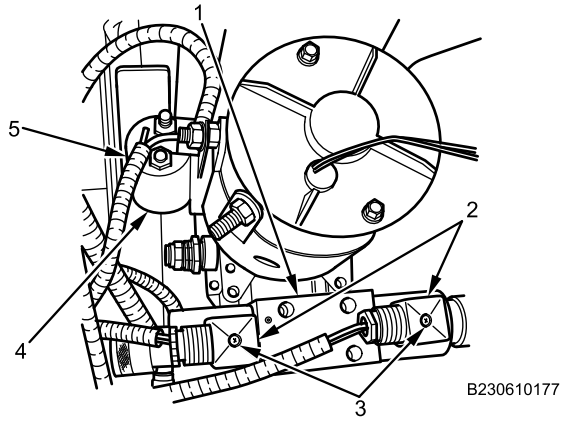

Figure 5. Rear Door/Ramp Hydraulic Valve Connectors.

3. Connect control wire harness (Figure 5, Item 5) to solenoid (Figure 5, Item 4).
4. Install solenoid battery wire (Figure 6, Item 2), new lockwasher, and nut (Figure 6, Item 1) to solenoid (Figure 6, Item 7). Tighten nut securely.

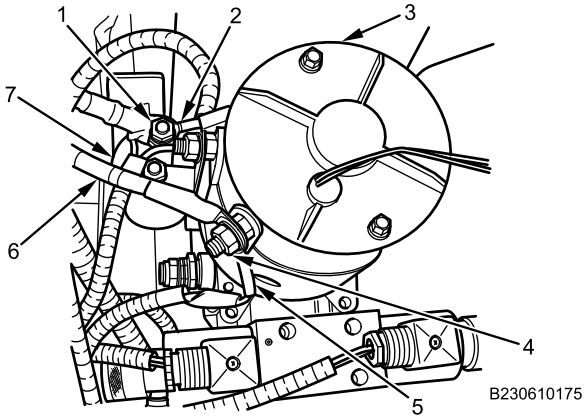

Figure 6. Rear Door/Ramp Battery Connection.

5. Install ground wire (Figure 6, Item 5), ground cable (Figure 6, Item 6), new lockwasher, and nut (Figure 6, Item 4) on motor (Figure 6, Item 3). Tighten nut securely.
6. Install all cable lock straps and tighten securely.

END OF TASK

REAR DOOR/RAMP HYDRAULIC SYSTEM HARNESS REMOVAL AND INSTALLATION (PUSH-TYPE OPERATION) - (CONTINUED)

FOLLOW-ON MAINTENANCE

1. Install rear door hydraulic pump cover (WP 0690).
2. Turn MAIN POWER switch on (TM 9-2355-106-10).
3. Verify rear door/ramp operation (TM 9-2355-106-10).
4. Turn MAIN POWER switch off (TM 9-2355-106-10).
5. Remove wheel chocks (TM 9-2355-106-10).

END OF TASK

END OF WORK PACKAGE

FIELD MAINTENANCE

REAR DOOR/RAMP HYDRAULIC SYSTEM HARNESS REMOVAL AND INSTALLATION (PULL-TYPE OPERATION)

INITIAL SETUP:

Tools and Special Tools
General Mechanic's Tool Kit (GMTK) (WP 0795, Item 37)

Materials/Parts
Grease (WP 0794, Item 22)
Wire tags (WP 0794, Item 33)
Lockwashers - (2) (WP 0796, Item 23)
Cable lock strap - (5) (WP 0796, Item 120)
Lockwashers - (2) (WP 0796, Item 9)

References
TM 9-2355-106-10
TM 9-2355-106-23P
WP 0786
WP 0782

Equipment Condition
Parking brake set (TM 9-2355-106-10)
Transmission set in NEUTRAL (N) (TM 9-2355-106-10)
Engine off (TM 9-2355-106-10)
MAIN POWER switch off (TM 9-2355-106-10)
Wheels chocked (TM 9-2355-106-10)
Rear door/ramp open (TM 9-2355-106-10)
Rear door hydraulic pump cover removed (WP 0691)

WARNING

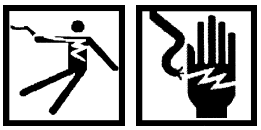

Use extreme caution when testing or working on or around electrical circuits. Always assume that electrical circuits are live. Electrical shock can occur upon contact with voltage high enough to cause current flow through muscles or nerves. On Direct Current (DC) systems, generally 1 milliamp of current can be felt, 5 milliamps can cause severe pain, 15 milliamps can cause loss of muscle control, and 70 milliamps can be fatal. Wear protective clothing; ensure skin, clothing, and surrounding areas are dry; do not wear jewelry; and touch only the insulated, nonmetallic parts of electrical components and testing equipment. To prevent electrical arcing, avoid shorting electrical test probes and jumper wires. Electrical arcing can cause bright flashes of light, capable of causing temporary blindness. If electrical injury occurs, immediately shut off power supply and seek medical assistance. Failure to comply may result in serious injury or death to personnel.

NOTE

Note location of cable lock straps before removing to aid installation.

REAR DOOR/RAMP HYDRAULIC SYSTEM HARNESS REMOVAL AND INSTALLATION (PULL-TYPE OPERATION) - (CONTINUED)

REMOVAL

CAUTION

Identify, note location, and label wires with wire tags before removing to aid installation. Failure to comply may result in damage to electrical system.

NOTE

Manifold assembly removed for clarity.

1. Remove nut (Figure 1, Item 2), lockwasher, and ground wire (Figure 1, Item 1) from door/ramp motor bracket (Figure 1, Item 3). Discard lockwasher.

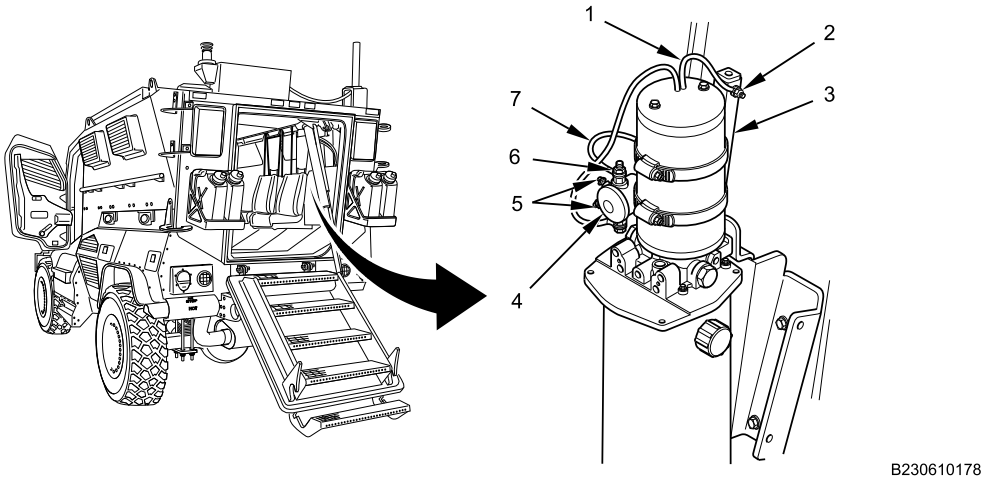

Figure 1. Rear Door/Ramp Solenoid Connections.

2. Remove nut (Figure 1, Item 6), lockwasher, and solenoid battery wire (Figure 1, Item 7) from solenoid (Figure 1, Item 4). Discard lockwasher.
3. Remove two nuts (Figure 1, Item 5), two lockwashers, and two control wires from solenoid (Figure 1, Item 4). Discard lockwashers.

REAR DOOR/RAMP HYDRAULIC SYSTEM HARNESS REMOVAL AND INSTALLATION (PULL-TYPE OPERATION) - (CONTINUED)

4. Disconnect two wire connectors (Figure 2, Item 4 and 6) from manual override valve (Figure 2, Item 5).

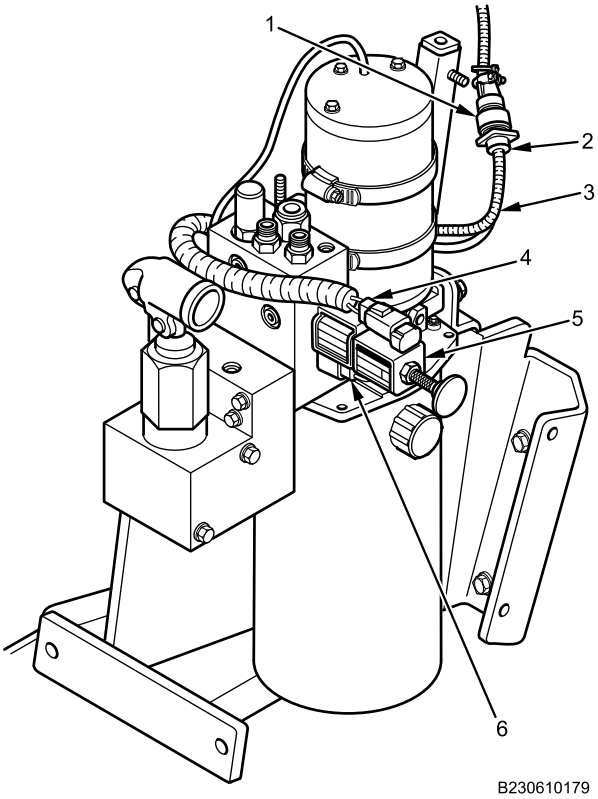

Figure 2. Rear Door/Ramp Valve Harness Connectors.

5. Disconnect rear door/ramp hydraulic system harness connector (Figure 2, Item 2) from rear door/ramp control harness connector (Figure 2, Item 1).
6. Remove and discard cable lock straps. Remove rear door/ramp hydraulic system harness (Figure 2, Item 3).

END OF TASK

REAR DOOR/RAMP HYDRAULIC SYSTEM HARNESS REMOVAL AND INSTALLATION (PULL-TYPE OPERATION) - (CONTINUED)

INSTALLATION

WARNING

Dielectric grease is harmful to skin and eyes. If grease contacts eyes, rinse thoroughly and contact physician if irritation persists. If skin is contacted, wash thoroughly with soap and water. Failure to comply may result in serious injury to personnel.

NOTE

Apply dielectric grease to all rear door/ramp hydraulic system harness electrical connections.

1. Position rear door/ramp hydraulic system harness (Figure 3, Item 3) next to rear door/ramp hydraulic system. Connect rear door/ramp hydraulic system harness connector (Figure 3, Item 2) to rear door/ramp control harness connector (Figure 3, Item 1).

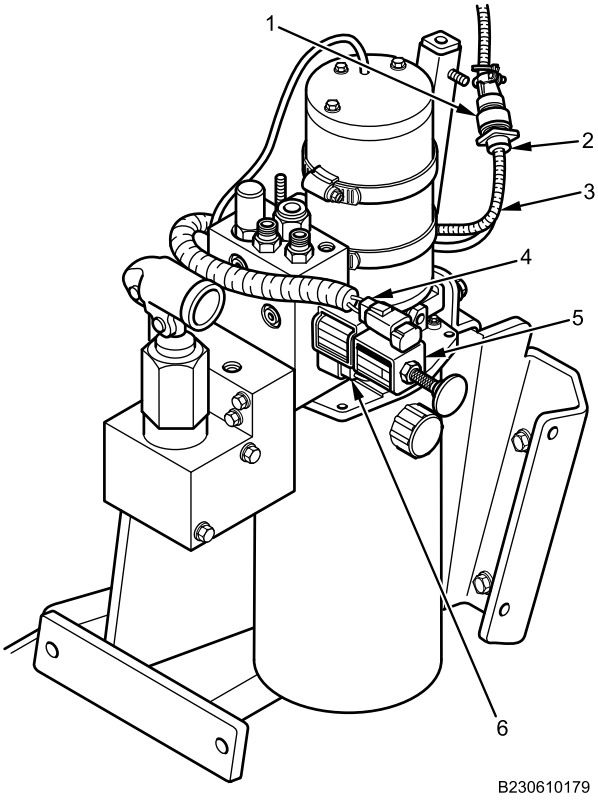

Figure 3. Rear Door/Ramp Hydraulic System Harness Connectors.

2. Connect two connectors (Figure 3, Item 4 and 6) to manual override valve (Figure 3, Item 5).

CAUTION

Install rear door/ramp hydraulic system wires as labeled during removal procedure. Failure to comply may result in damage to electrical system.

REAR DOOR/RAMP HYDRAULIC SYSTEM HARNESS REMOVAL AND INSTALLATION (PULL-TYPE OPERATION) - (CONTINUED)

NOTE

Manifold assembly removed for clarity.

3. Install two feed wires to solenoid (Figure 4, Item 4) with two new lockwashers and two nuts (Figure 4, Item 5). Tighten nuts securely.

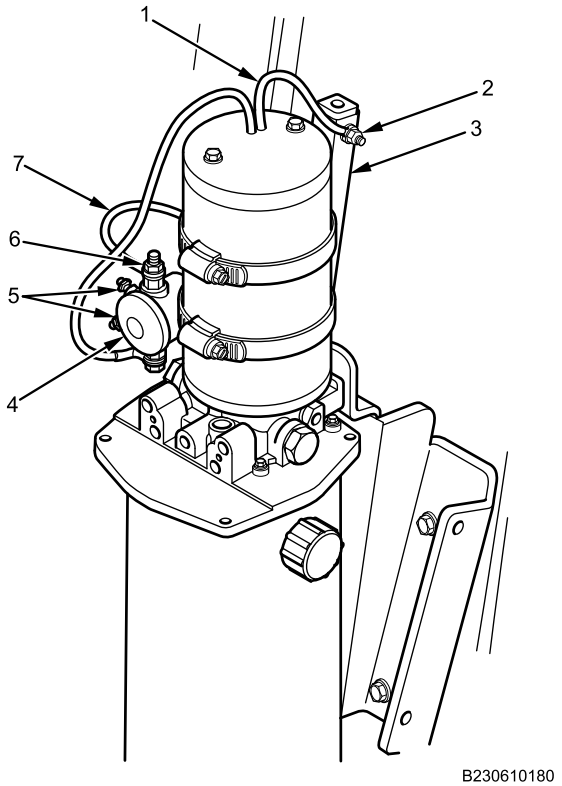

Figure 4. Rear Door/Ramp Solenoid Connections.

4. Install solenoid battery wire (Figure 4, Item 7) to solenoid (Figure 4, Item 4) with new lockwasher and nut (Figure 4, Item 6). Tighten nut securely.
5. Install ground wire (Figure 4, Item 1) on door/ramp motor bracket (Figure 4, Item 3) with new lockwasher and nut (Figure 4, Item 2). Tighten nut securely.
6. Install new cable lock straps.

END OF TASK

REAR DOOR/RAMP HYDRAULIC SYSTEM HARNESS REMOVAL AND INSTALLATION (PULL-TYPE OPERATION) - (CONTINUED)

FOLLOW-ON MAINTENANCE

1. Install rear door hydraulic pump cover (WP 0691).
2. Close rear door/ramp (TM 9-2355-106-10).
3. Remove wheel chocks (TM 9-2355-106-10).

END OF TASK

END OF WORK PACKAGE

FIELD MAINTENANCE

110V OUTLET HARNESS REMOVAL AND INSTALLATION

INITIAL SETUP:

Tools and Special Tools
General Mechanic's Tool Kit (GMTK) (WP 0795, Item 37)

Materials/Parts
Grease (WP 0794, Item 22)
Cable lock strap (WP 0796, Item 124)

References
TM 9-2355-106-10
TM 9-2355-106-23P
WP 0782

Equipment Condition
Parking brake set (TM 9-2355-106-10)
Transmission set in NEUTRAL (N) (TM 9-2355-106-10)
Engine off (TM 9-2355-106-10)
MAIN POWER switch off (TM 9-2355-106-10)
Wheels chocked (TM 9-2355-106-10)
Battery cables disconnected (WP 0404)
Right rear stowage box removed (WP 0673)
110V harness removed from 110V inverter (WP 0352)

WARNING

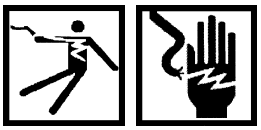

Use extreme caution when testing or working on or around electrical circuits. Always assume that electrical circuits are live. Electrical shock can occur upon contact with voltage high enough to cause current flow through muscles or nerves. On Direct Current (DC) systems, generally 1 milliamp of current can be felt, 5 milliamps can cause severe pain, 15 milliamps can cause loss of muscle control, and 70 milliamps can be fatal. Wear protective clothing; ensure skin, clothing, and surrounding areas are dry; do not wear jewelry; and touch only the insulated, nonmetallic parts of electrical components and testing equipment. To prevent electrical arcing, avoid shorting electrical test probes and jumper wires. Electrical arcing can cause bright flashes of light, capable of causing temporary blindness. If electrical injury occurs, immediately shut off power supply and seek medical assistance. Failure to comply may result in serious injury or death to personnel.

NOTE

Label all wires before removal.

110V OUTLET HARNESS REMOVAL AND INSTALLATION - (CONTINUED)

REMOVAL

1. Remove and discard three cable lock straps (Figure 1, Item 1) securing harness (Figure 1, Item 2) to body (Figure 1, Item 4).

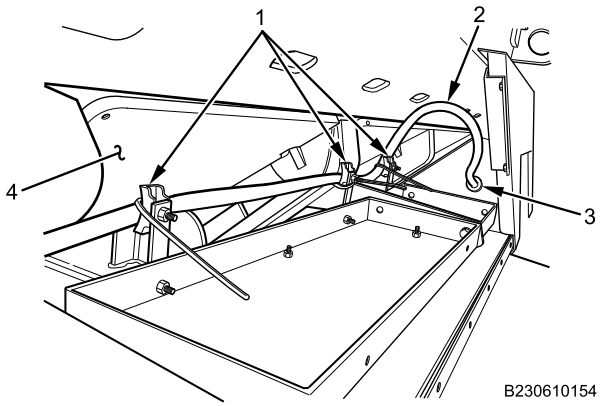

Figure 1. 110V Harness.

2. Pull harness (Figure 1, Item 2) through grommet (Figure 1, Item 3) and remove harness.

END OF TASK

INSTALLATION

WARNING

Dielectric grease is harmful to skin and eyes. If grease contacts eyes, rinse thoroughly and contact physician if irritation persists. If skin is contacted, wash thoroughly with soap and water. Failure to comply may result in serious injury to personnel.

NOTE

Apply dielectric grease to all electrical connections.

1. Secure 110V harness (Figure 2, Item 2) to body (Figure 2, Item 4) with three new cable lock straps (Figure 2, Item 1).

110V OUTLET HARNESS REMOVAL AND INSTALLATION - (CONTINUED)

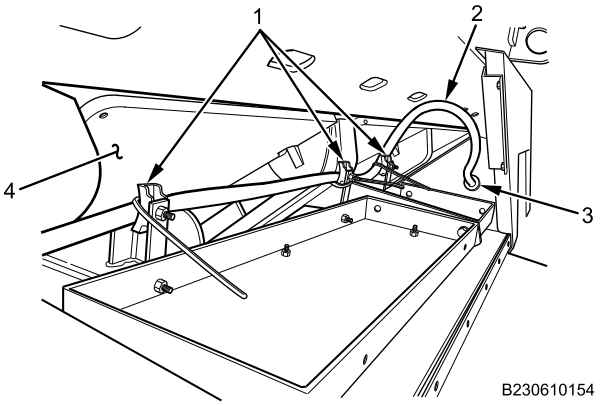

Figure 2. 110V Harness.

2. Insert harness through grommet (Figure 2, Item 3).

END OF TASK

FOLLOW-ON MAINTENANCE

1. Install right rear stowage box (WP 0673).
2. Connect 110V harness to 110V inverter (WP 0352).
3. Connect battery cables (WP 0404).
4. Turn MAIN POWER switch on (TM 9-2355-106-10).
5. Verify 110V outlet operation (TM 9-2355-106-10).
6. Turn MAIN POWER switch off (TM 9-2355-106-10).
7. Remove wheel chocks (TM 9-2355-106-10).

END OF TASK

END OF WORK PACKAGE

FIELD MAINTENANCE

24V INSTRUMENT PANEL (IP) FEED HARNESS REMOVAL AND INSTALLATION

INITIAL SETUP:

Tools and Special Tools
General Mechanic's Tool Kit (GMTK) (WP 0795, Item 37)

Materials/Parts
Grease (WP 0794, Item 22)
Cable lock strap - (4) (WP 0796, Item 134)

References
TM 9-2355-106-10
TM 9-2355-106-23P
WP 0782

Equipment Condition
Parking brake set (TM 9-2355-106-10)
Transmission set in NEUTRAL (N) (TM 9-2355-106-10)
Engine off (TM 9-2355-106-10)
MAIN POWER switch off (TM 9-2355-106-10)
Wheels chocked (TM 9-2355-106-10)
Right door open and secured (TM 9-2355-106-10)
Instrument panel right side closeout removed (WP 0580)

WARNING

Use extreme caution when testing or working on or around electrical circuits. Always assume that electrical circuits are live. Electrical shock can occur upon contact with voltage high enough to cause current flow through muscles or nerves. On Direct Current (DC) systems, generally 1 milliamp of current can be felt, 5 milliamps can cause severe pain, 15 milliamps can cause loss of muscle control, and 70 milliamps can be fatal. Wear protective clothing; ensure skin, clothing, and surrounding areas are dry; do not wear jewelry; and touch only the insulated, nonmetallic parts of electrical components and testing equipment. To prevent electrical arcing, avoid shorting electrical test probes and jumper wires. Electrical arcing can cause bright flashes of light, capable of causing temporary blindness. If electrical injury occurs, immediately shut off power supply and seek medical assistance. Failure to comply may result in serious injury or death to personnel.

Cabin door must be secured in the open position by using heavy duty straps to prevent accidental closure during vehicle maintenance. Pull check link retaining pin prior to securing door open. Failure to comply may result in serious injury or death to personnel.

The doors are heavy. Ensure that no one is standing directly behind the door before opening and closing it. Ensure that hands and feet are clear of the area before closing the door. Use caution when opening or closing the doors, especially when the vehicle is parked on an incline. Failure to comply may result in injury to personnel.

NOTE

Note location of cable lock straps before removing to aid in installation.

24V INSTRUMENT PANEL (IP) FEED HARNESS REMOVAL AND INSTALLATION - (CONTINUED)

REMOVAL

1. Disconnect 24V IP feed wiring harness connector (Figure 1, Item 2) from Power Distribution Module (PDM) (Figure 1, Item 1).

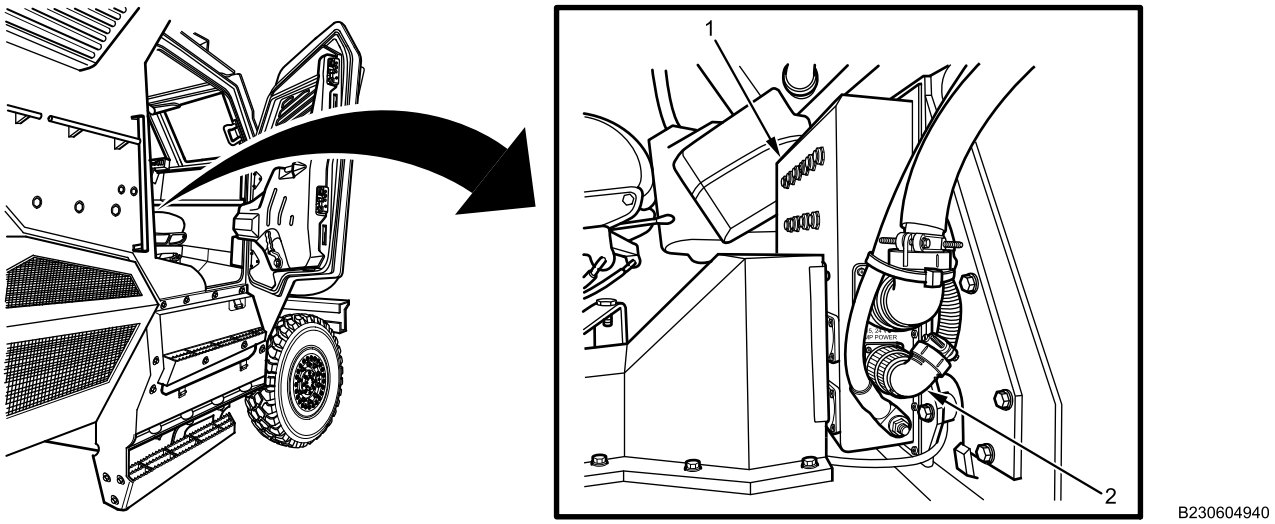

Figure 1. 24V IP Feed Wiring Harness Connector.

2. Disconnect IP feed wiring harness connector (Figure 2, Item 2) from 24V input connector (Figure 2, Item 1). Remove and discard cable lock straps. Remove 24V IP feed wiring harness.

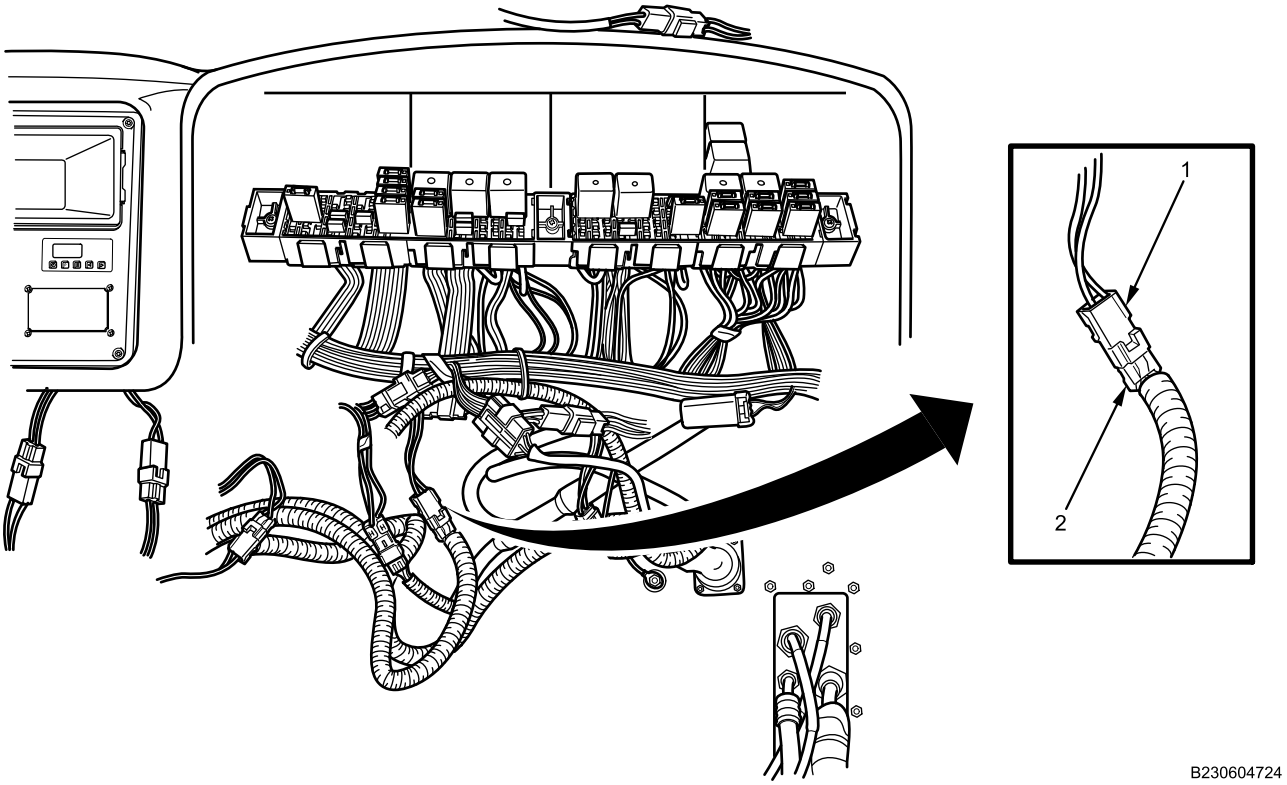

Figure 2. 24V Input Connector.

END OF TASK

24V INSTRUMENT PANEL (IP) FEED HARNESS REMOVAL AND INSTALLATION - (CONTINUED)

INSTALLATION

WARNING

Dielectric grease is harmful to skin and eyes. If grease contacts eyes, rinse thoroughly and contact physician if irritation persists. If skin is contacted, wash thoroughly with soap and water. Failure to comply may result in serious injury to personnel.

NOTE

Apply dielectric grease to all 24V IP feed wiring harness electrical connections before installation.

1. Connect 24V IP feed wiring harness connector (Figure 3, Item 2) to 24V input connector (Figure 3, Item 1).

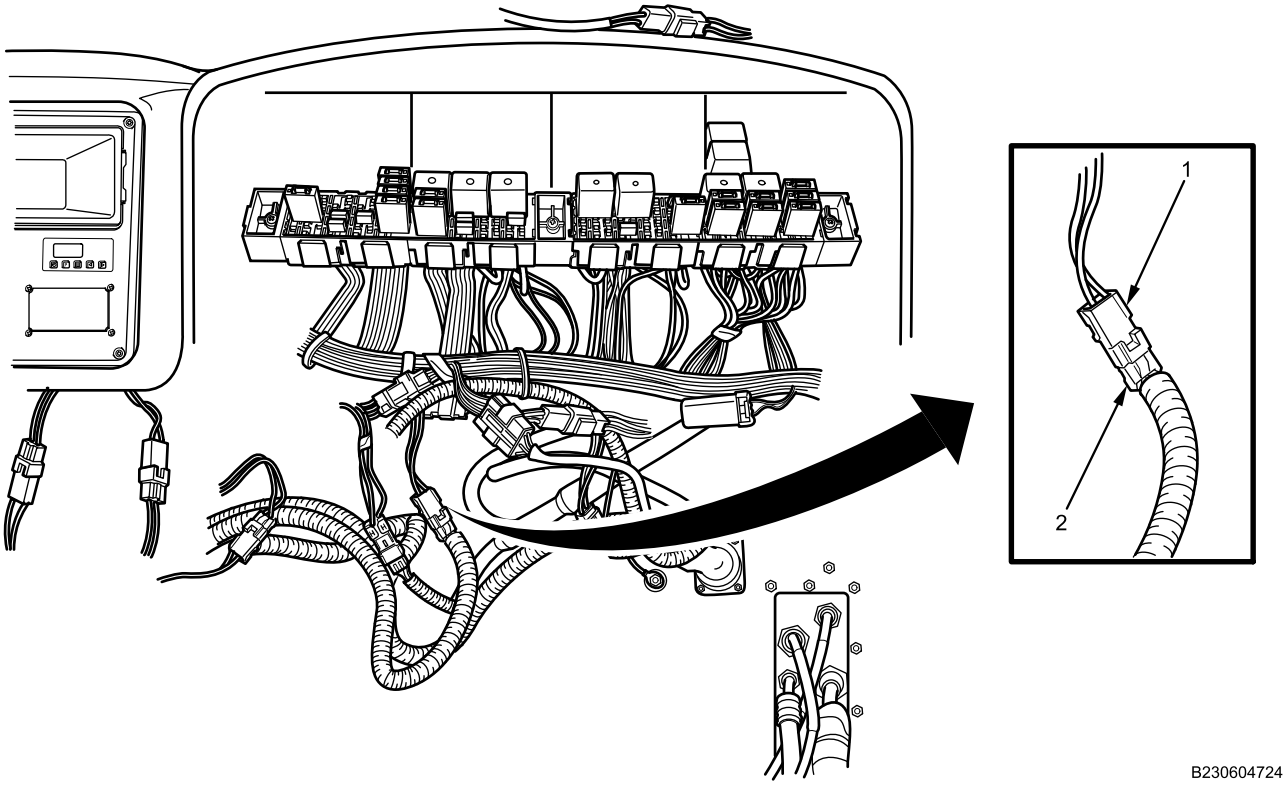

Figure 3. 24V Input Connector.

24V INSTRUMENT PANEL (IP) FEED HARNESS REMOVAL AND INSTALLATION - (CONTINUED)

2. Connect 24V IP feed wiring harness connector (Figure 4, Item 2) to PDM (Figure 4, Item 1). Install new cable lock straps.

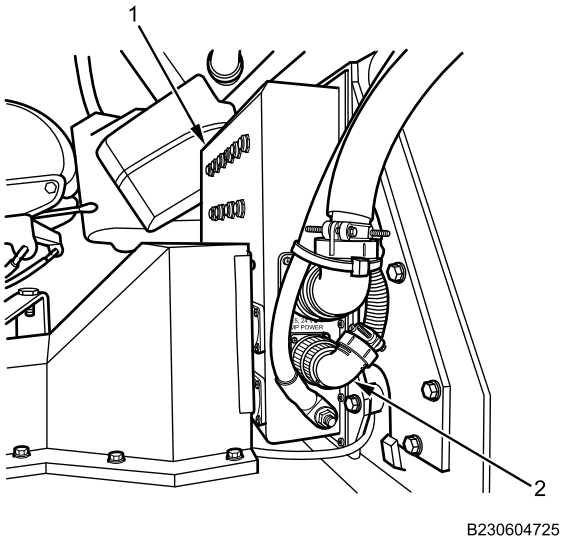

Figure 4. 24V Instrument Panel (IP) Feed Wiring Harness Connector.

END OF TASK

FOLLOW-ON MAINTENANCE

1. Install instrument panel right side closeout (WP 0580).
2. Verify 24V interior light operation (TM 9-2355-106-10).
3. Close and secure right door (TM 9-2355-106-10).
4. Remove wheel chocks (TM 9-2355-106-10).

END OF TASK

END OF WORK PACKAGE

FIELD MAINTENANCE

24V POWER DISTRIBUTION MODULE (PDM) FEED HARNESS REMOVAL AND INSTALLATION

INITIAL SETUP:

Tools and Special Tools
General Mechanic's Tool Kit (GMTK) (WP 0795, Item 37)

Materials/Parts
Grease (WP 0794, Item 22)
Cable lock strap - (4) (WP 0796, Item 134)

Personnel Required
Maintainer - (2)

References
TM 9-2355-106-10
TM 9-2355-106-23P
WP 0786
WP 0782

Equipment Condition
Parking brake set (TM 9-2355-106-10)
Transmission set in NEUTRAL (N) (TM 9-2355-106-10)
Engine off (TM 9-2355-106-10)
MAIN POWER switch off (TM 9-2355-106-10)
Wheels chocked (TM 9-2355-106-10)
Instrument panel right side closeout removed (WP 0580)
Engine hood open and secured (TM 9-2355-106-10)
Right door open and secured (TM 9-2355-106-10)

WARNING

Use extreme caution when testing or working on or around electrical circuits. Always assume that electrical circuits are live. Electrical shock can occur upon contact with voltage high enough to cause current flow through muscles or nerves. On Direct Current (DC) systems, generally 1 milliamp of current can be felt, 5 milliamps can cause severe pain, 15 milliamps can cause loss of muscle control, and 70 milliamps can be fatal. Wear protective clothing; ensure skin, clothing, and surrounding areas are dry; do not wear jewelry; and touch only the insulated, nonmetallic parts of electrical components and testing equipment. To prevent electrical arcing, avoid shorting electrical test probes and jumper wires. Electrical arcing can cause bright flashes of light, capable of causing temporary blindness. If electrical injury occurs, immediately shut off power supply and seek medical assistance. Failure to comply may result in serious injury or death to personnel.

Engine hood is extremely heavy and requires two-person lift. Ensure that there is adequate space in front of the vehicle to open hood completely without pinning or pinching personnel between hood and any other structure. Use extreme care when working under hood and make sure it is properly supported. Failure to comply may result in serious injury or death to personnel.

Cabin door must be secured in the open position by using heavy duty straps to prevent accidental closure during vehicle maintenance. Pull check link retaining pin prior to securing door open. Failure to comply may result in serious injury or death to personnel.

NOTE

Record location of cable lock straps before removing to aid in installation.

24V POWER DISTRIBUTION MODULE (PDM) FEED HARNESS REMOVAL AND INSTALLATION - (CONTINUED)

REMOVAL

1. Disconnect exterior wiring harness connector (Figure 1, Item 2) from 24V Power Distribution Module (PDM) feed harness connection (Figure 1, Item 1).

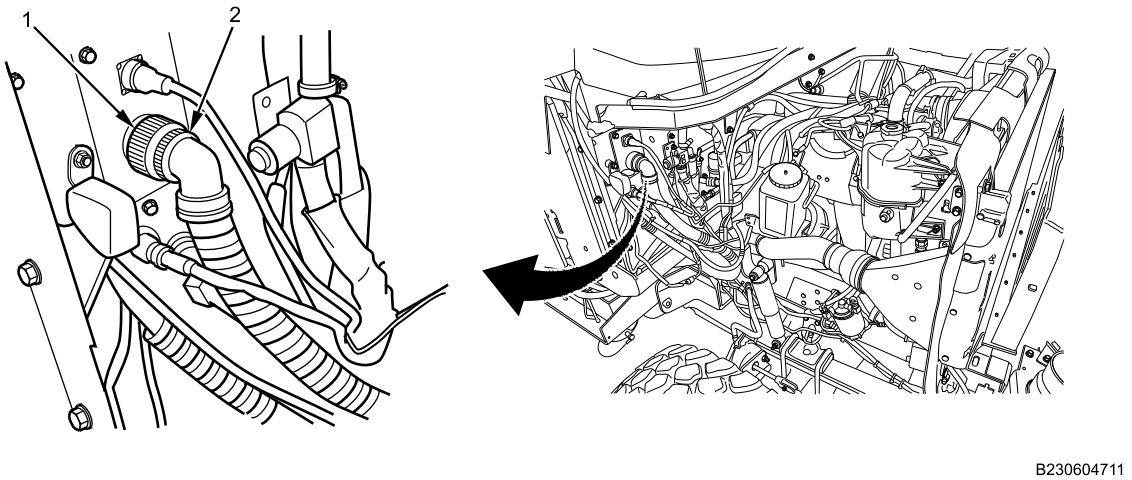

Figure 1. Exterior Side of Pass-Through Plate.

2. With assistance, remove four nuts (Figure 2, Item 2), (one hidden), and PDM feed wiring harness connector (Figure 2, Item 1) from interior pass-through plate (Figure 2, Item 3).

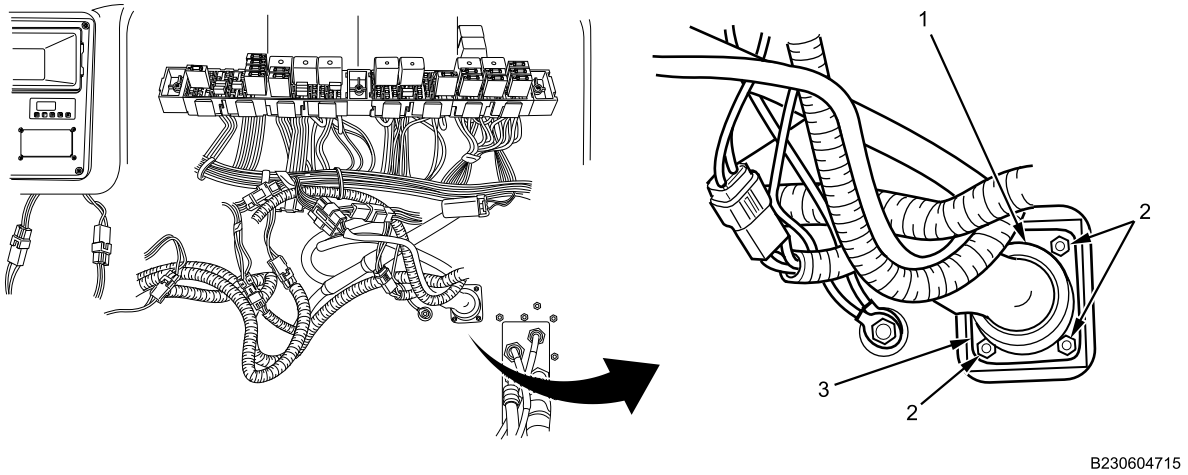

Figure 2. Interior Side of Pass-Through Plate.

3. Remove four screws (Figure 3, Item 1), (one hidden), on exterior side of pass-through plate (Figure 3, Item 2).

24V POWER DISTRIBUTION MODULE (PDM) FEED HARNESS REMOVAL AND INSTALLATION - (CONTINUED)

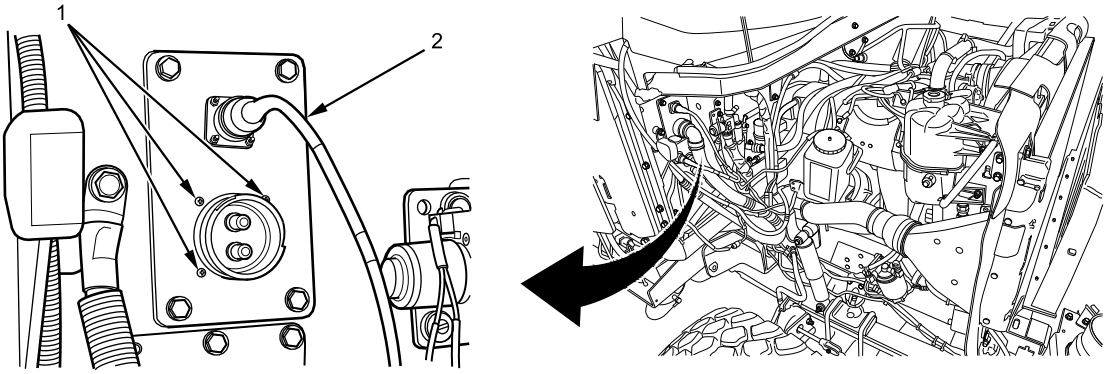

Figure 3. Interior Side of Pass-Through Plate.

4. Disconnect 24V PDM wiring harness (Figure 4, Item 2) from PDM (Figure 4, Item 1).

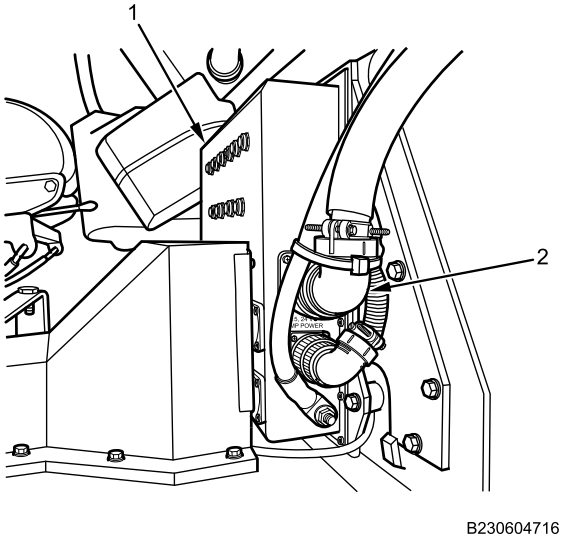

Figure 4. PDM Feed Wiring Harness Connector.

5. Remove and discard cable lock straps. Remove 24V PDM feed wiring harness.

END OF TASK

24V POWER DISTRIBUTION MODULE (PDM) FEED HARNESS REMOVAL AND INSTALLATION - (CONTINUED)

INSTALLATION

WARNING

Dielectric grease is harmful to skin and eyes. If grease contacts eyes, rinse thoroughly and contact physician if irritation persists. If skin is contacted, wash thoroughly with soap and water. Failure to comply may result in serious injury to personnel.

NOTE

Apply dielectric grease to 24V PDM feed and ground wiring harness connections.

1. Position 24V wiring harness. Connect 24V PDM wiring harness (Figure 5, Item 2) to PDM (Figure 5, Item 1).
2. Install new cable lock straps.

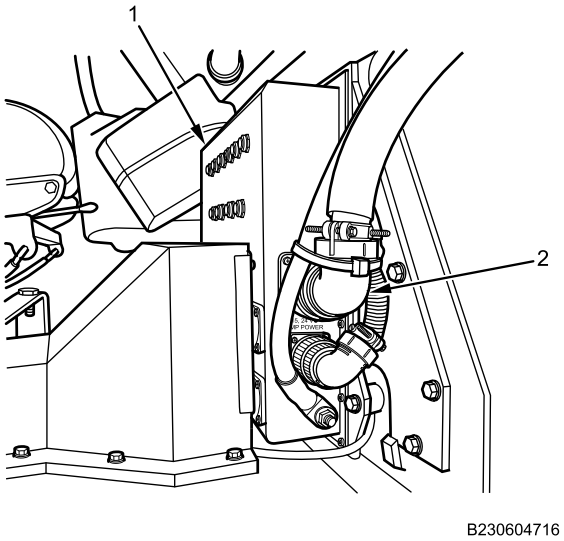

Figure 5. PDM Feed Wiring Harness Connector.

24V POWER DISTRIBUTION MODULE (PDM) FEED HARNESS REMOVAL AND INSTALLATION - (CONTINUED)

3. Install four screws (Figure 6, Item 1), (one hidden), to exterior side of pass-through plate (Figure 6, Item 2).

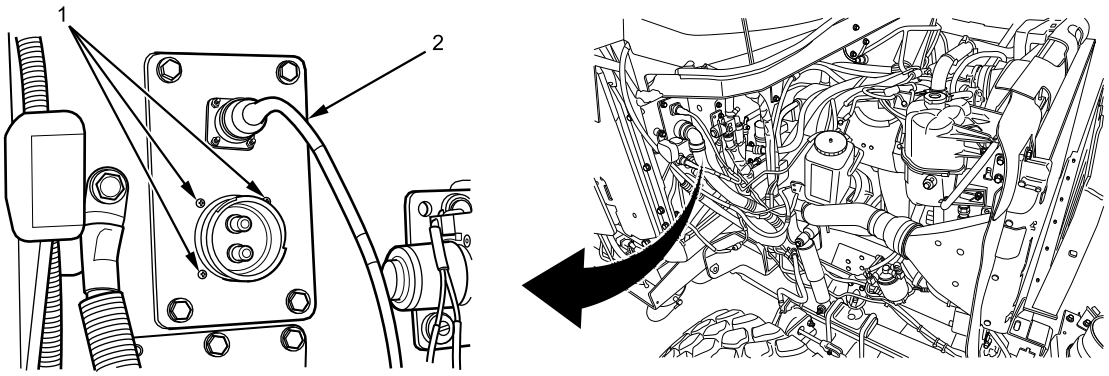

Figure 6. Interior Side of Pass-Through Plate.

4. With assistance install four nuts (Figure 7, Item 2), (one hidden), mounting PDM feed wiring harness connector (Figure 7, Item 1) to interior pass-through plate (Figure 7, Item 3). Tighten nuts securely.

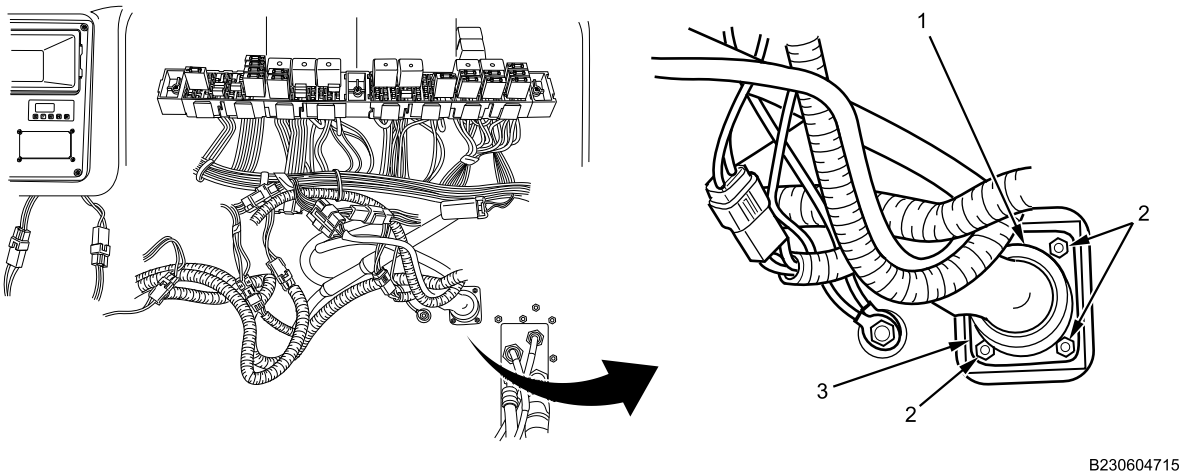

Figure 7. Interior Side of Pass-Through Plate.

24V POWER DISTRIBUTION MODULE (PDM) FEED HARNESS REMOVAL AND INSTALLATION - (CONTINUED)

5. Connect exterior wiring harness connector (Figure 8, Item 2) to 24V PDM feed harness connection (Figure 8, Item 1).

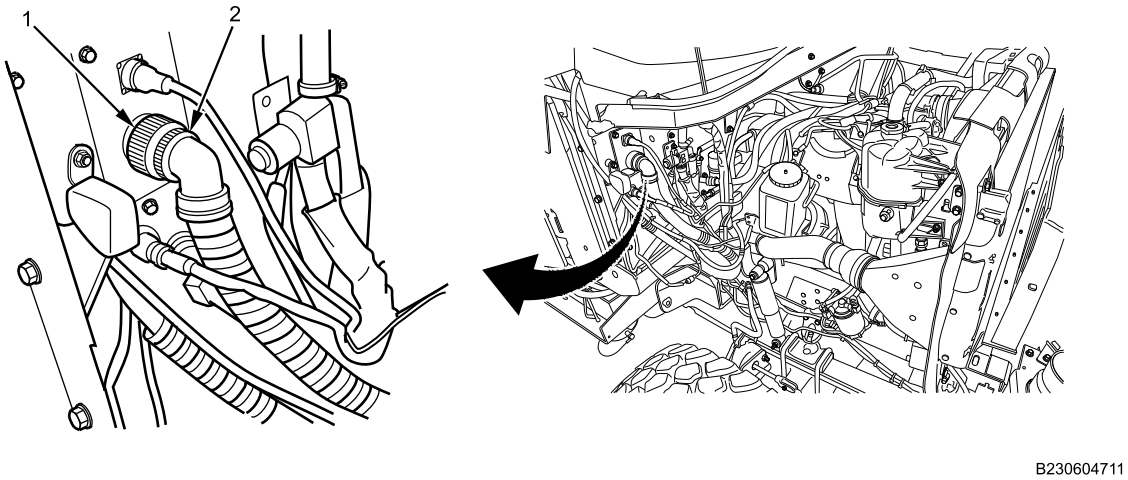

Figure 8. Exterior Side of Pass-Through Plate.

END OF TASK

FOLLOW-ON MAINTENANCE

1. Turn MAIN POWER switch on (TM 9-2355-106-10).
2. Verify PDM operation (TM 9-2355-106-10).
3. Turn MAIN POWER switch off (TM 9-2355-106-10).
4. Install instrument panel right side closeout (WP 0580).
5. Close and secure right door (TM 9-2355-106-10).
6. Close and secure engine hood (TM 9-2355-106-10).
7. Remove wheel chocks (TM 9-2355-106-10).

END OF TASK

END OF WORK PACKAGE

FIELD MAINTENANCE

24V POWER DISTRIBUTION MODULE (PDM) GROUND CABLE REMOVAL AND INSTALLATION

INITIAL SETUP:

Tools and Special Tools
General Mechanic's Tool Kit (GMTK) (WP 0795, Item 37)

Materials/Parts
Grease (WP 0794, Item 22)
Cable lock strap - (4) (WP 0796, Item 134)

References
TM 9-2355-106-10
TM 9-2355-106-23P
WP 0786
WP 0782

Equipment Condition
Parking brake set (TM 9-2355-106-10)
Transmission set in NEUTRAL (N) (TM 9-2355-106-10)
Engine off (TM 9-2355-106-10)
MAIN POWER switch off (TM 9-2355-106-10)
Wheels chocked (TM 9-2355-106-10)
Instrument panel (IP) right side closeout removed (WP 0580)
Right door open and secured (TM 9-2355-106-10)

WARNING

Cabin door must be secured in the open position by using heavy duty straps to prevent accidental closure during vehicle maintenance. Pull check link retaining pin prior to securing door open. Failure to comply may result in serious injury or death to personnel.

Use extreme caution when testing or working on or around electrical circuits. Always assume that electrical circuits are live. Electrical shock can occur upon contact with voltage high enough to cause current flow through muscles or nerves. On Direct Current (DC) systems, generally 1 milliamp of current can be felt, 5 milliamps can cause severe pain, 15 milliamps can cause loss of muscle control, and 70 milliamps can be fatal. Wear protective clothing; ensure skin, clothing, and surrounding areas are dry; do not wear jewelry; and touch only the insulated, nonmetallic parts of electrical components and testing equipment. To prevent electrical arcing, avoid shorting electrical test probes and jumper wires. Electrical arcing can cause bright flashes of light, capable of causing temporary blindness. If electrical injury occurs, immediately shut off power supply and seek medical assistance. Failure to comply may result in serious injury or death to personnel.

NOTE

Record location of cable straps before removing to aid in installation.

24V POWER DISTRIBUTION MODULE (PDM) GROUND CABLE REMOVAL AND INSTALLATION - (CONTINUED)

REMOVAL

1. Remove bolt (Figure 1, Item 1) and PDM ground cable (Figure 1, Item 2) from bulkhead.

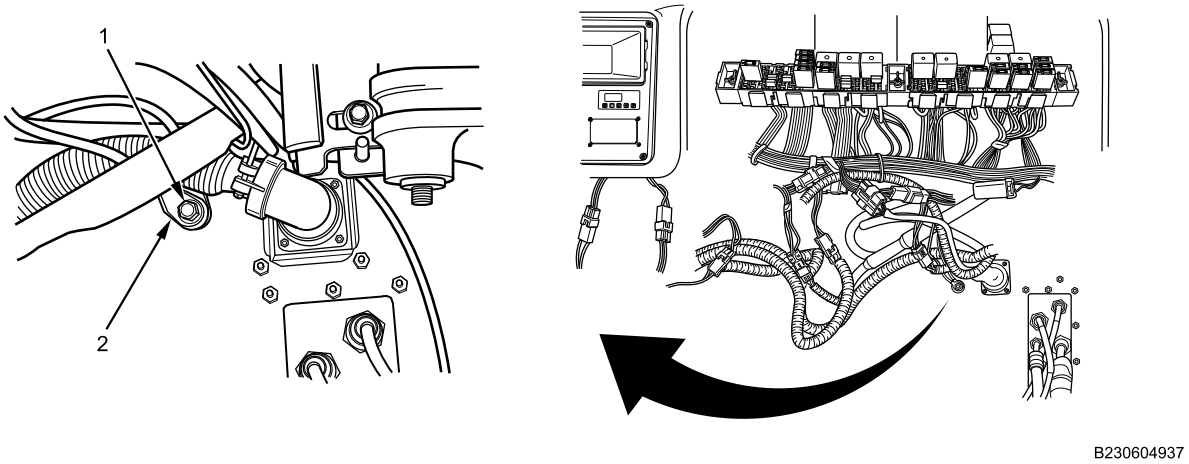

Figure 1. PDM Ground Cable Connection.

2. Remove nut (Figure 2, Item 2) from PDM (Figure 2, Item 1).

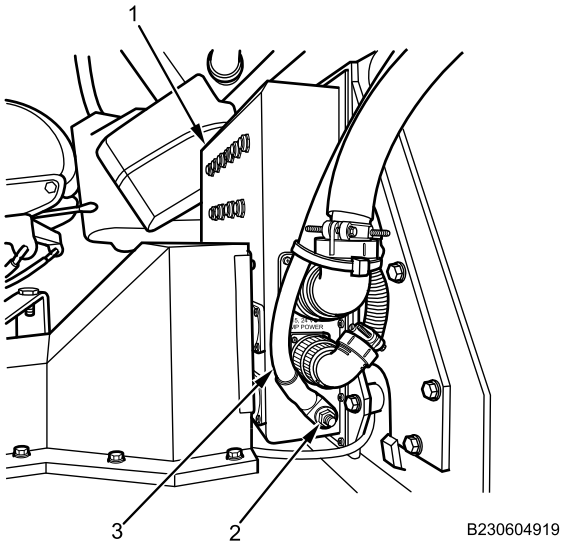

Figure 2. PDM Ground Connection.

3. Remove and discard cable lock straps. Remove PDM ground cable (Figure 2, Item 3).

END OF TASK

24V POWER DISTRIBUTION MODULE (PDM) GROUND CABLE REMOVAL AND INSTALLATION - (CONTINUED)

INSTALLATION

WARNING

Dielectric grease is harmful to skin and eyes. If grease contacts eyes, rinse thoroughly and contact physician if irritation persists. If skin is contacted, wash thoroughly with soap and water. Failure to comply may result in serious injury to personnel.

NOTE

Apply dielectric grease to all 24V PDM ground cable electrical connections before installation.

1. Position PDM ground cable (Figure 3, Item 3). Install nut (Figure 3, Item 2) to PDM (Figure 3, Item 1). Tighten nut securely.

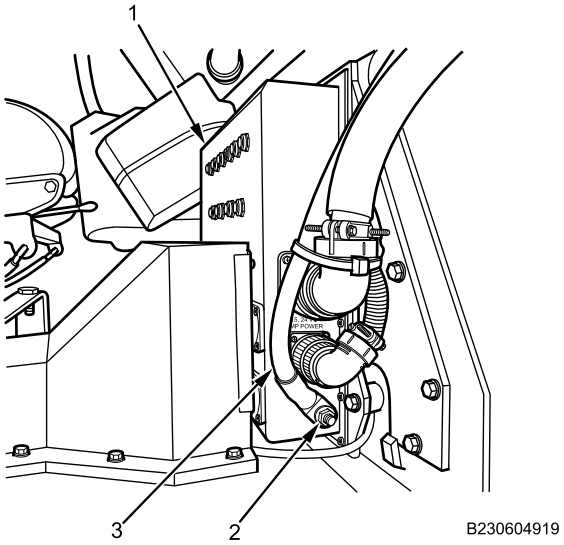

Figure 3. PDM Ground Connection.

24V POWER DISTRIBUTION MODULE (PDM) GROUND CABLE REMOVAL AND INSTALLATION - (CONTINUED)

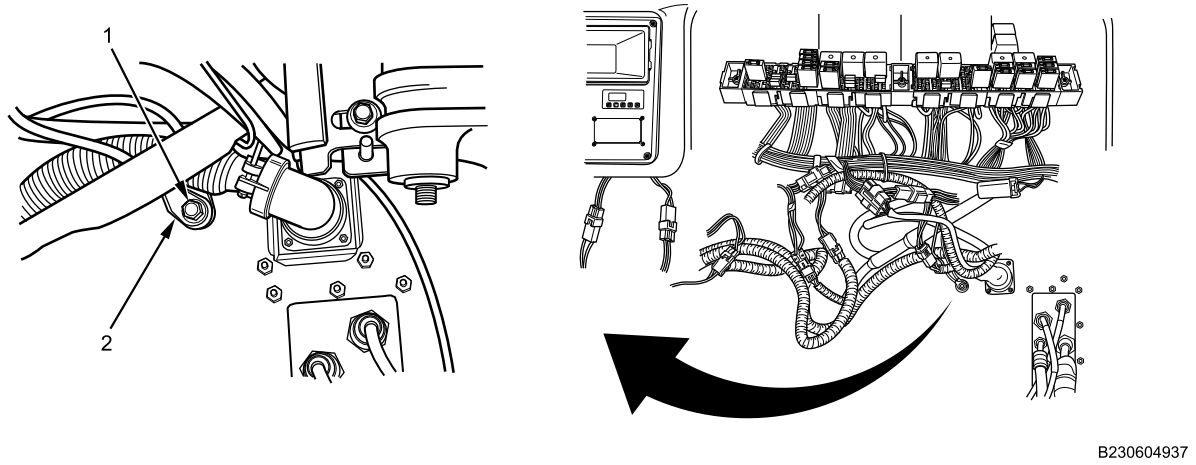

Figure 4. PDM Ground Cable Connection.

2. Install bolt (Figure 4, Item 1) securing PDM ground cable (Figure 4, Item 2). Tighten bolt securely.
3. Install new cable lock straps.

END OF TASK

FOLLOW-ON MAINTENANCE

1. Install IP right side closeout (WP 0580).
2. Verify PDM operation (TM 9-2355-106-10).
3. Close and secure right door (TM 9-2355-106-10).
4. Remove wheel chocks (TM 9-2355-106-10).

END OF TASK

END OF WORK PACKAGE

FIELD MAINTENANCE

LEFT 12V SOCKET AND FEED HARNESS REMOVAL AND INSTALLATION

INITIAL SETUP:

Tools and Special Tools
General Mechanic's Tool Kit (GMTK) (WP 0795, Item 37)

Materials/Parts
Grease (WP 0794, Item 22)
Cable lock strap - (8) (WP 0796, Item 134)

References
TM 9-2355-106-10
TM 9-2355-106-23P
WP 0782

Equipment Condition
Parking brake set (TM 9-2355-106-10)
Transmission set in NEUTRAL (N) (TM 9-2355-106-10)
Engine off (TM 9-2355-106-10)
MAIN POWER switch off (TM 9-2355-106-10)
Wheels chocked (TM 9-2355-106-10)

WARNING

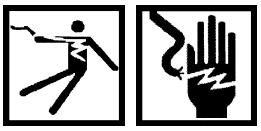

Use extreme caution when testing or working on or around electrical circuits. Always assume that electrical circuits are live. Electrical shock can occur upon contact with voltage high enough to cause current flow through muscles or nerves. On Direct Current (DC) systems, generally 1 milliamp of current can be felt, 5 milliamps can cause severe pain, 15 milliamps can cause loss of muscle control, and 70 milliamps can be fatal. Wear protective clothing; ensure skin, clothing, and surrounding areas are dry; do not wear jewelry; and touch only the insulated, nonmetallic parts of electrical components and testing equipment. To prevent electrical arcing, avoid shorting electrical test probes and jumper wires. Electrical arcing can cause bright flashes of light, capable of causing temporary blindness. If electrical injury occurs, immediately shut off power supply and seek medical assistance. Failure to comply may result in serious injury or death to personnel.

NOTE

Note location of wires to aid installation.

LEFT 12V SOCKET AND FEED HARNESS REMOVAL AND INSTALLATION - (CONTINUED)

REMOVAL

1. Remove two bolts (Figure 1, Item 1) securing 12V junction box (Figure 1, Item 3) to communications rack (Figure 1, Item 2).

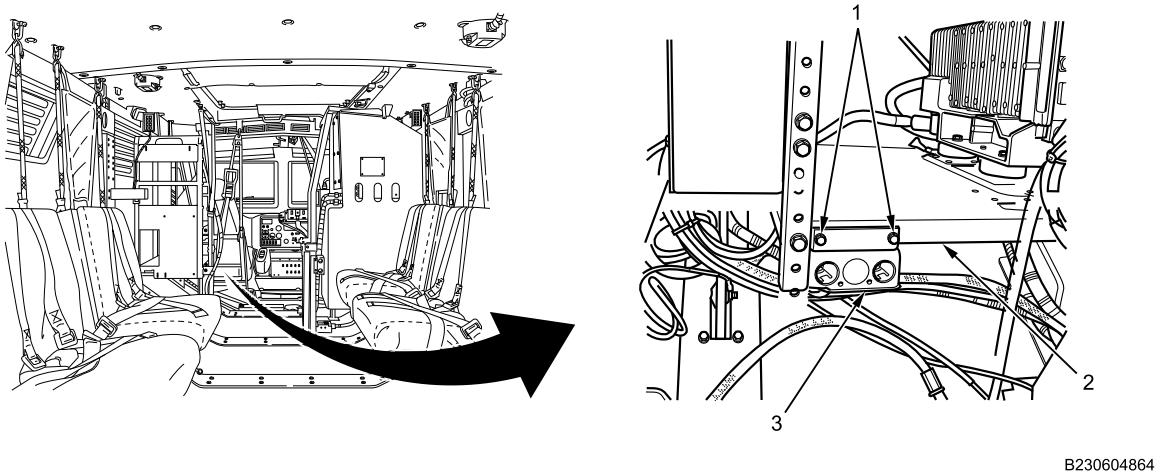

Figure 1. 12V Junction Box.

2. Remove two screws (Figure 2, Item 1) from junction box cover (Figure 2, Item 2).

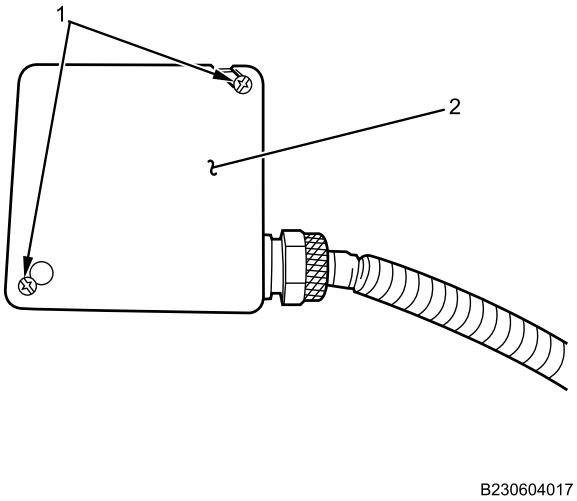

Figure 2. Junction Box Cover Screws.

LEFT 12V SOCKET AND FEED HARNESS REMOVAL AND INSTALLATION - (CONTINUED)

3. Pull wires (Figure 3, Item 5) from socket terminals (Figure 3, Item 1).

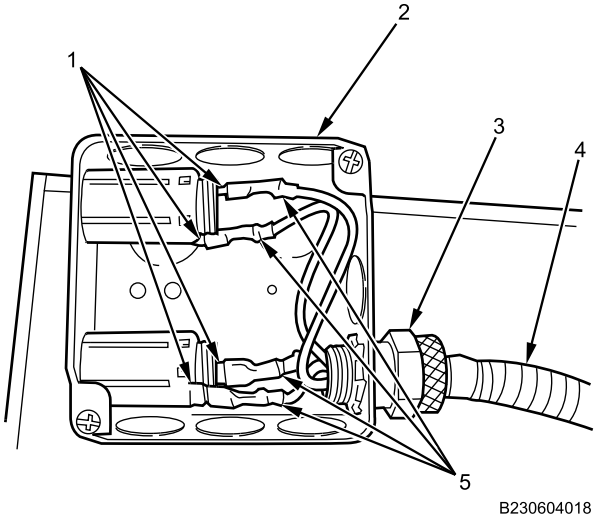

Figure 3. Left Side Junction Box Wires.

4. Turn harness connector (Figure 3, Item 3) counterclockwise to remove wire harness (Figure 3, Item 4) from junction box (Figure 3, Item 2).
5. Turn 12V switch base retainer (Figure 4, Item 1) counterclockwise to unscrew from the inner 12V socket (Figure 4, Item 2) and remove from junction box (Figure 4, Item 3).

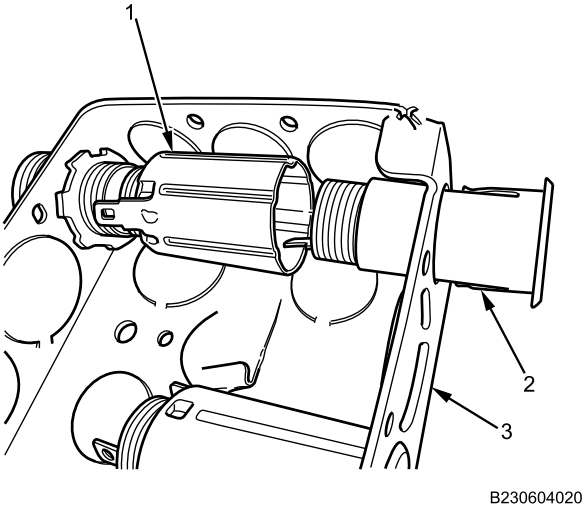

Figure 4. Junction Box.

LEFT 12V SOCKET AND FEED HARNESS REMOVAL AND INSTALLATION - (CONTINUED)

6. Remove four bolts (Figure 5, Item 1), lockwashers, and flat washers securing crossbars (Figure 5, Item 3) to center mounting bracket (Figure 5, Item 4). Discard lockwashers and remove crossbars (Figure 5, Item 3).

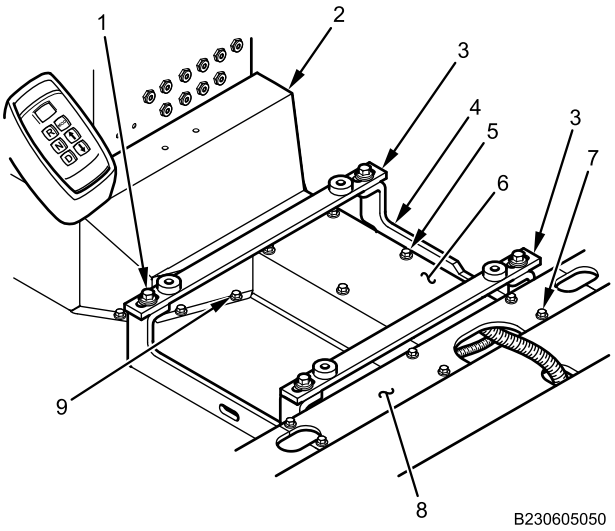

Figure 5. Power Distribution Module (PDM) Harness Electrical Storage Shield and Duct Covers.

7. Remove six bolts (Figure 5, Item 5) from electrical harness storage duct center cover (Figure 5, Item 6).
8. Remove electrical harness storage duct center cover (Figure 5, Item 6).
9. Remove eight bolts (Figure 5, Item 9) securing PDM harness electrical storage shield (Figure 5, Item 2) to floor. Remove electrical storage shield.
10. Remove six bolts (Figure 5, Item 7) from electrical harness storage duct rear center cover (Figure 5, Item 8).
11. Remove electrical harness storage duct rear center cover (Figure 5, Item 8).
12. Follow 12V feed harness (Figure 6, Item 1 and 4) from electrical harness storage duct (Figure 6, Item 2) to driver selector console (Figure 6, Item 5). Remove and discard cable lock straps (Figure 6, Item 3) from harness.

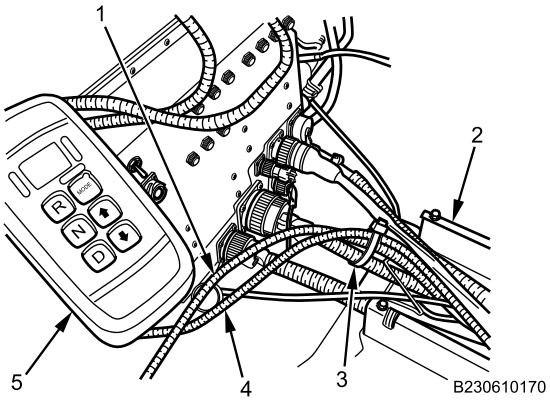

Figure 6. 12V Power Outlet Harness.

LEFT 12V SOCKET AND FEED HARNESS REMOVAL AND INSTALLATION - (CONTINUED)

13. Remove and discard cable lock strap (Figure 7, Item 2) from driver selector console (Figure 7, Item 1).

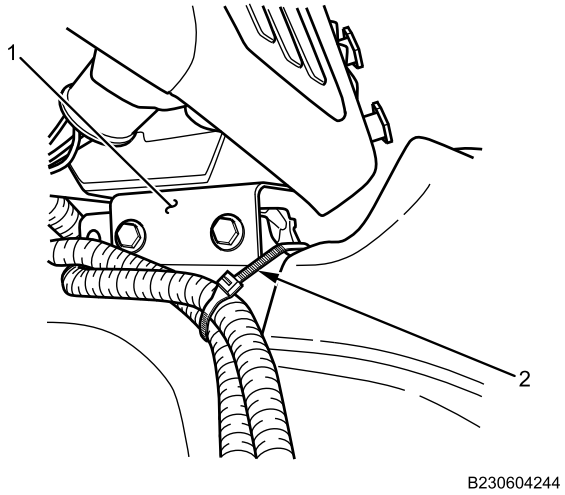

Figure 7. Cable Lock Strap.

14. Disconnect left side 12V feed harness (Figure 8, Item 1) from IP harness (Figure 8, Item 2) and remove 12V feed harness.

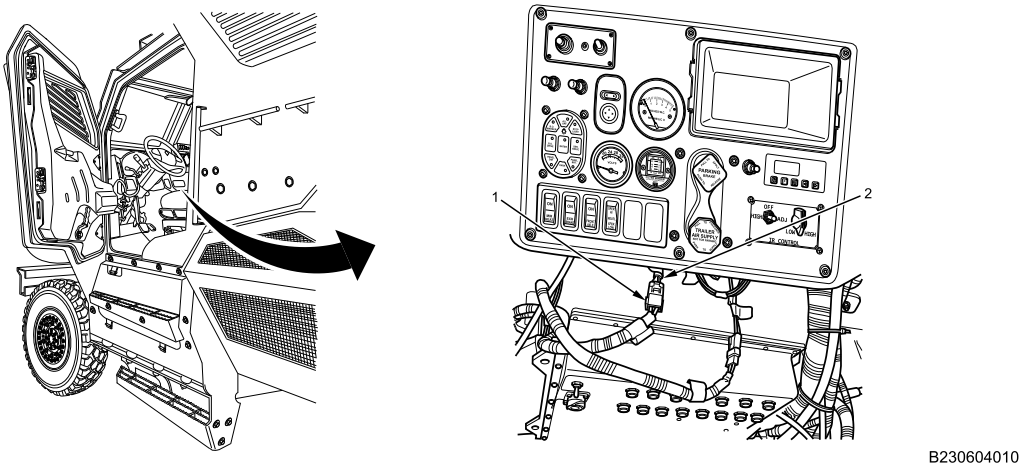

Figure 8. Feed Harness.

END OF TASK

LEFT 12V SOCKET AND FEED HARNESS REMOVAL AND INSTALLATION - (CONTINUED)

INSTALLATION

WARNING

Dielectric grease is harmful to skin and eyes. If grease contacts eyes, rinse thoroughly and contact physician if irritation persists. If skin is contacted, wash thoroughly with soap and water. Failure to comply may result in serious injury to personnel.

1. Apply dielectric grease to all wire connectors.
2. Connect left side 12V feed harness (Figure 9, Item 1) on IP harness (Figure 9, Item 2).

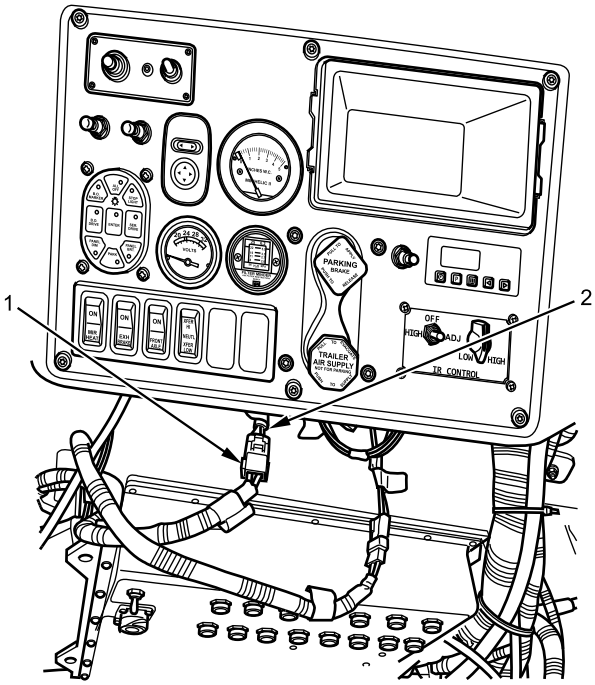

Figure 9. Feed Harness.

LEFT 12V SOCKET AND FEED HARNESS REMOVAL AND INSTALLATION - (CONTINUED)

3. Secure 12V feed harness with new cable lock strap (Figure 10, Item 2) on driver selector console (Figure 10, Item 1).

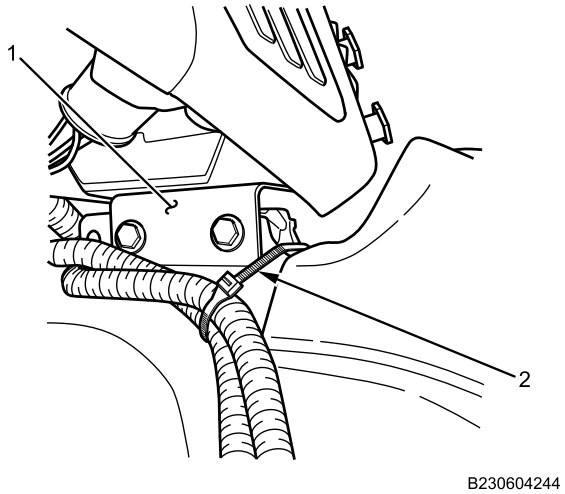

Figure 10. Cable Lock Strap.

4. Route 12V feed harness (Figure 11, Item 1 and 4) from driver selector console (Figure 11, Item 5) through electrical harness storage duct (Figure 11, Item 2) and install new cable lock straps (Figure 11, Item 3).

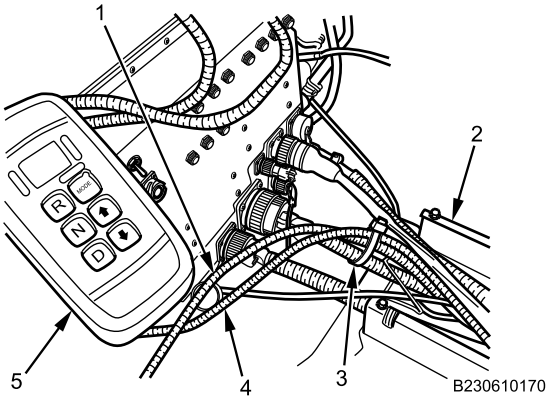

Figure 11. 12V Power Outlet Harness.

LEFT 12V SOCKET AND FEED HARNESS REMOVAL AND INSTALLATION - (CONTINUED)

5. Install eight bolts (Figure 12, Item 9) securing PDM harness electrical storage shield (Figure 12, Item 2) to floor. Tighten bolts securely.

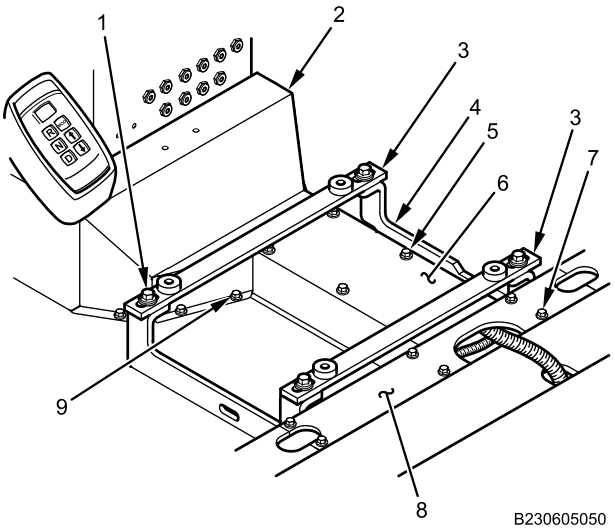

Figure 12. Electrical Harness Storage Duct Center Rear Cover.

6. Install six bolts (Figure 12, Item 5) on electrical harness storage duct center cover (Figure 12, Item 6) and tighten securely.
7. Install four bolts (Figure 12, Item 1) with flat washers, and new lockwashers securing crossbars (Figure 12, Item 3) to center mounting bracket (Figure 12, Item 4). Tighten bolts securely.
8. Install electrical harness storage duct rear center cover (Figure 12, Item 8) with six bolts (Figure 12, Item 7). Tighten bolts securely.
9. Push inner 12V socket (Figure 13, Item 2) into junction box (Figure 13, Item 3) and install switch base retainer (Figure 13, Item 1) to 12V socket by turning switch base retainer clockwise. Tighten retainer securely.

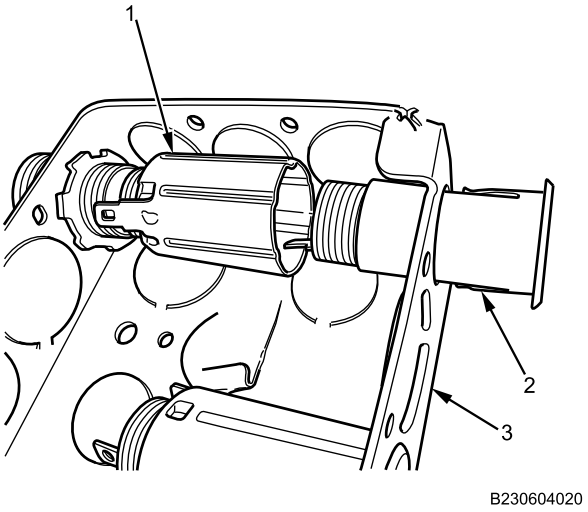

Figure 13. Junction Box.

LEFT 12V SOCKET AND FEED HARNESS REMOVAL AND INSTALLATION - (CONTINUED)

10. Push wires (Figure 14, Item 5) on socket terminals (Figure 14, Item 1).

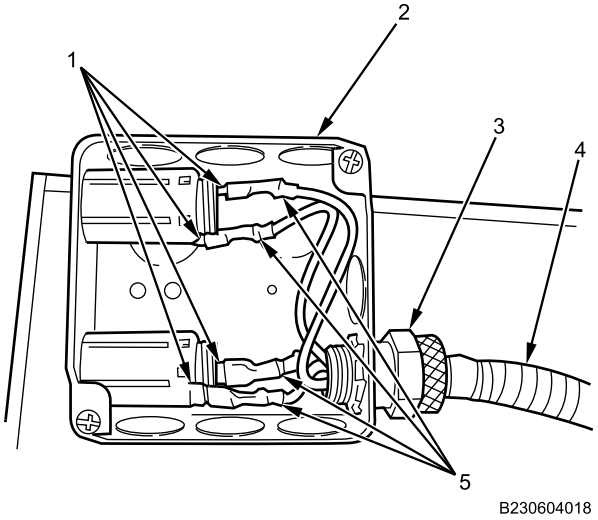

Figure 14. Left Side Junction Box Wires.

11. Install wire harness (Figure 14, Item 4) on junction box (Figure 14, Item 2) by turning connector (Figure 14, Item 3) clockwise. Tighten securely.
12. Install junction box cover (Figure 15, Item 2) with two screws (Figure 15, Item 1). Tighten screws securely.

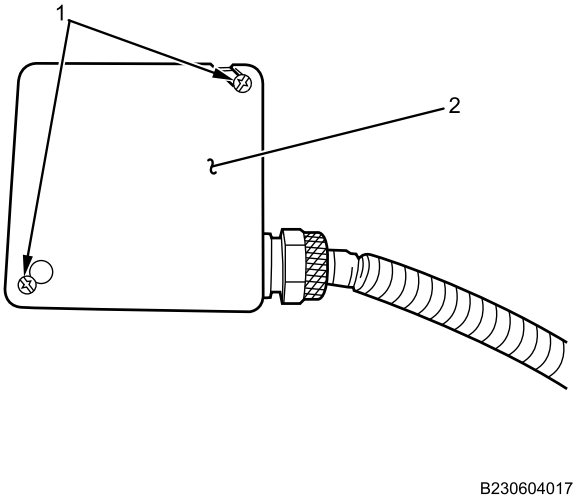

Figure 15. Junction Box Cover Screws.

LEFT 12V SOCKET AND FEED HARNESS REMOVAL AND INSTALLATION - (CONTINUED)

13. Install 12V junction box (Figure 16, Item 3) on communications rack (Figure 16, Item 2) with two bolts (Figure 16, Item 1). Tighten bolts securely.

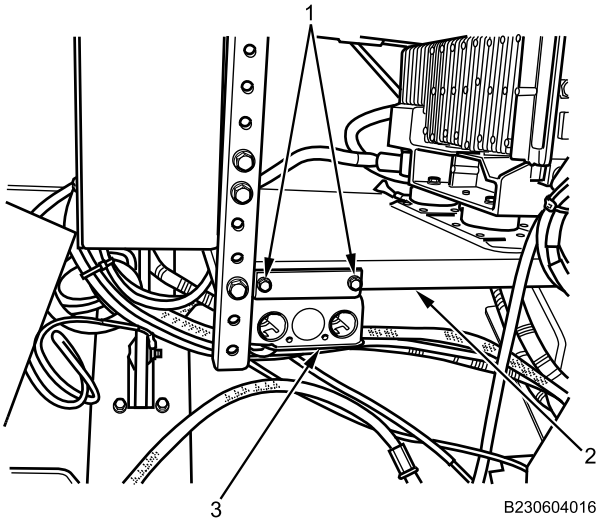

Figure 16. 12V Junction Box.

END OF TASK

FOLLOW-ON MAINTENANCE

1. Verify left 12V socket operation (TM 9-2355-106-10).
2. Remove wheel chocks (TM 9-2355-106-10).

END OF TASK

END OF WORK PACKAGE

FIELD MAINTENANCE

RIGHT 12V SOCKET AND FEED HARNESS REMOVAL AND INSTALLATION

INITIAL SETUP:

Tools and Special Tools
General Mechanic's Tool Kit (GMTK) (WP 0795, Item 37)

Materials/Parts
Grease (WP 0794, Item 22)
Wire tags (WP 0794, Item 33)
Cable lock strap - (8) (WP 0796, Item 134)

References
TM 9-2355-106-10
TM 9-2355-106-23P
WP 0786
WP 0782

Equipment Condition
Parking brake set (TM 9-2355-106-10)
Transmission set in NEUTRAL (N) (TM 9-2355-106-10)
Engine off (TM 9-2355-106-10)
MAIN POWER switch off (TM 9-2355-106-10)
Wheels chocked (TM 9-2355-106-10)

WARNING

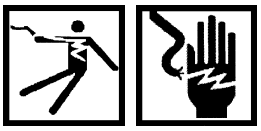

Use extreme caution when testing or working on or around electrical circuits. Always assume that electrical circuits are live. Electrical shock can occur upon contact with voltage high enough to cause current flow through muscles or nerves. On Direct Current (DC) systems, generally 1 milliamp of current can be felt, 5 milliamps can cause severe pain, 15 milliamps can cause loss of muscle control, and 70 milliamps can be fatal. Wear protective clothing; ensure skin, clothing, and surrounding areas are dry; do not wear jewelry; and touch only the insulated, nonmetallic parts of electrical components and testing equipment. To prevent electrical arcing, avoid shorting electrical test probes and jumper wires. Electrical arcing can cause bright flashes of light, capable of causing temporary blindness. If electrical injury occurs, immediately shut off power supply and seek medical assistance. Failure to comply may result in serious injury or death to personnel.

NOTE

Note location of wires to aid installation.

RIGHT 12V SOCKET AND FEED HARNESS REMOVAL AND INSTALLATION - (CONTINUED)

REMOVAL

1. Remove two screws (Figure 1, Item 1) securing 12V junction box (Figure 1, Item 2) on gunner platform stand (Figure 1, Item 3).

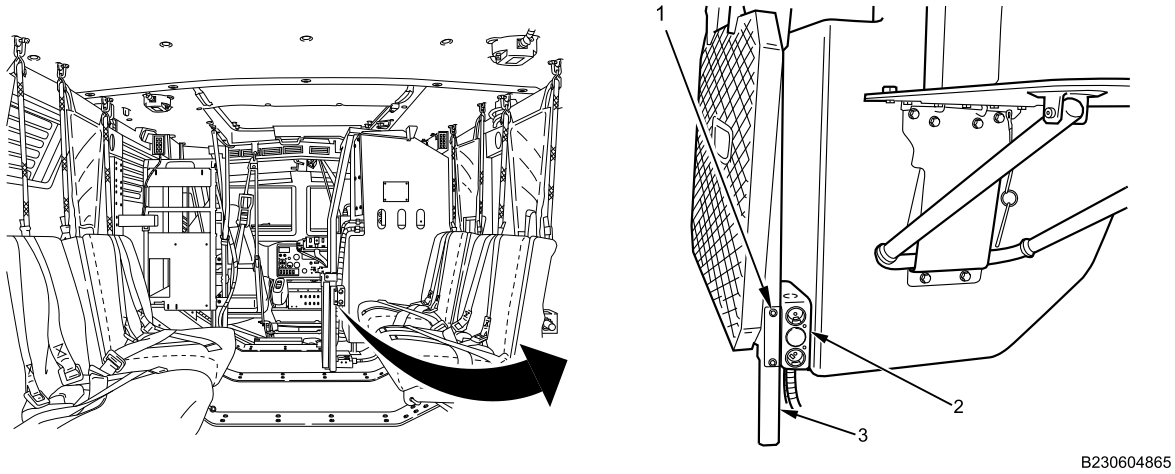

Figure 1. 12V Junction Box.

2. Remove two screws (Figure 2, Item 1) from junction box cover (Figure 2, Item 2). Place cover aside.

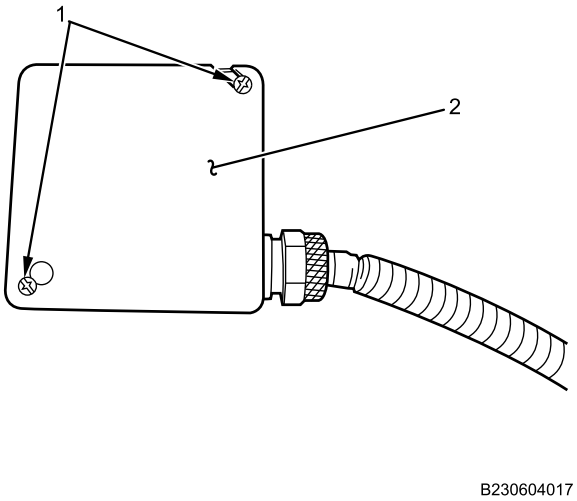

Figure 2. Junction Box Cover Screws.

RIGHT 12V SOCKET AND FEED HARNESS REMOVAL AND INSTALLATION - (CONTINUED)

NOTE

Label wires to aid installation.

3. Pull wires (Figure 3, Item 5) from socket terminals (Figure 3, Item 1).

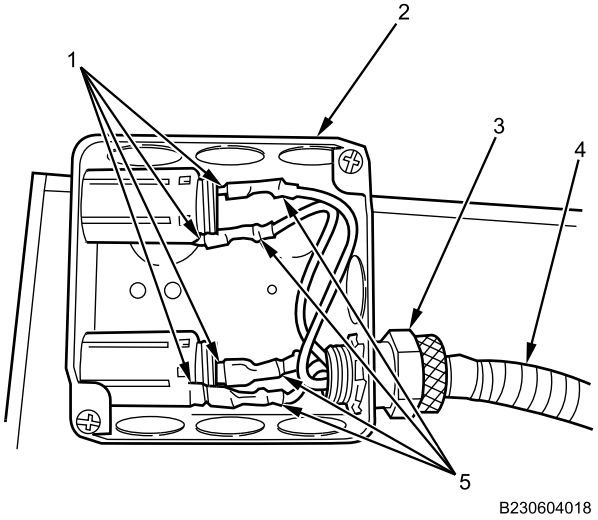

Figure 3. Right Side Junction Box Wires.

4. Turn harness connector (Figure 3, Item 3) counterclockwise to remove wire harness (Figure 3, Item 4) from junction box (Figure 3, Item 2). Set junction box aside.
5. Turn 12V socket retainer (Figure 4, Item 1) counterclockwise to unscrew from 12V socket (Figure 4, Item 2) and remove from junction box (Figure 4, Item 3). Set junction box aside.

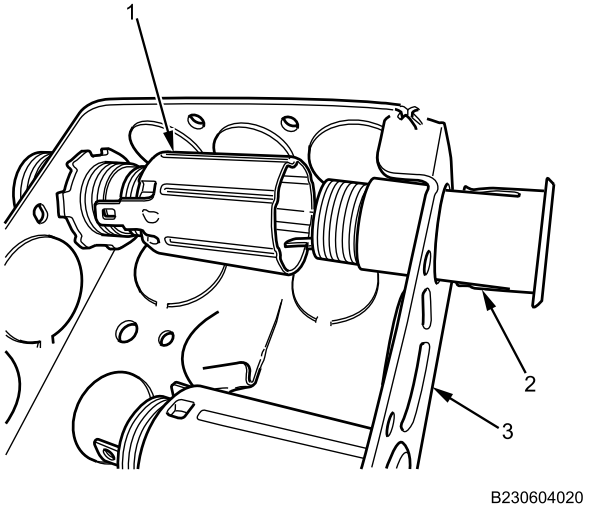

Figure 4. Junction Box.

RIGHT 12V SOCKET AND FEED HARNESS REMOVAL AND INSTALLATION - (CONTINUED)

6. Remove four bolts (Figure 5, Item 1), lockwashers, and flat washers securing crossbars (Figure 5, Item 3) to center mounting bracket (Figure 5, Item 4). Discard lockwashers and remove crossbars (Figure 5, Item 3).

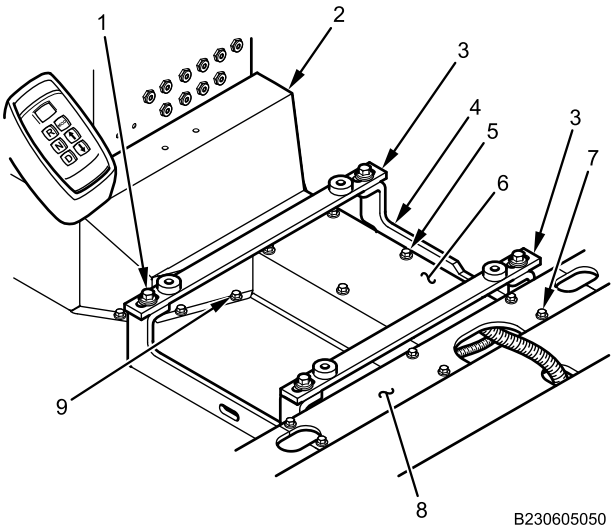

Figure 5. Power Distribution Module (PDM) Harness Electrical Storage Shield and Duct Covers.

7. Remove six bolts (Figure 5, Item 5) from electrical harness storage duct center cover (Figure 5, Item 6).
8. Remove electrical harness storage duct center cover (Figure 5, Item 6).
9. Remove eight bolts (Figure 5, Item 9) securing PDM harness electrical storage shield (Figure 5, Item 2) to floor. Remove electrical storage shield.
10. Remove six bolts (Figure 5, Item 7) from electrical harness storage duct rear center cover (Figure 5, Item 8).
11. Remove electrical harness storage duct rear center cover (Figure 5, Item 8).
12. Follow 12V feed harness (Figure 6, Item 1 and 3) from electrical harness storage duct (Figure 6, Item 2) to driver selector console (Figure 6, Item 4).

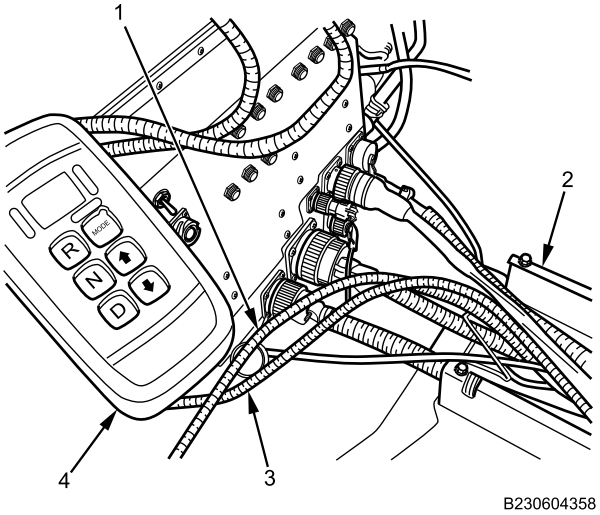

Figure 6. 12V Power Outlet Harness.

RIGHT 12V SOCKET AND FEED HARNESS REMOVAL AND INSTALLATION - (CONTINUED)

13. Remove and discard cable lock strap (Figure 7, Item 2) from driver selector console (Figure 7, Item 1).

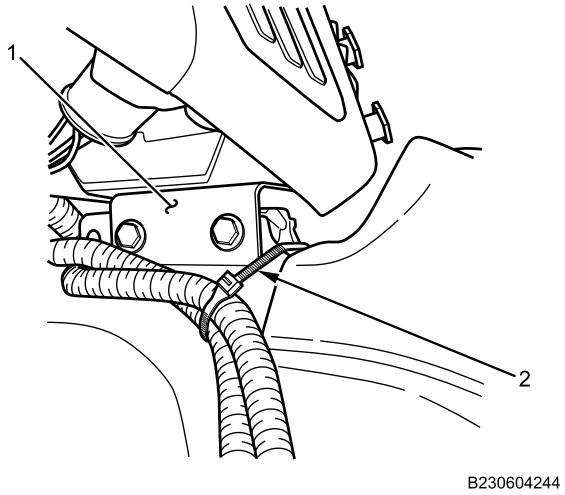

Figure 7. Cable Lock Strap.

14. Disconnect right side 12V feed harness (Figure 8, Item 1) from IP harness (Figure 8, Item 2) and remove feed harness.

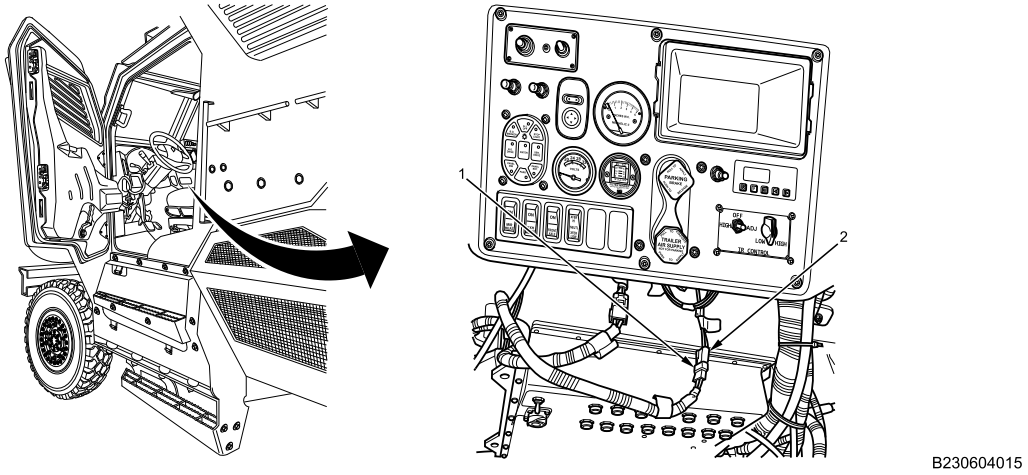

Figure 8. Feed Harness.

END OF TASK

RIGHT 12V SOCKET AND FEED HARNESS REMOVAL AND INSTALLATION - (CONTINUED)

INSTALLATION

WARNING

Dielectric grease is harmful to skin and eyes. If grease contacts eyes, rinse thoroughly and contact physician if irritation persists. If skin is contacted, wash thoroughly with soap and water. Failure to comply may result in serious injury to personnel.

1. Apply dielectric grease to all wire connectors.
2. Connect right side feed harness (Figure 9, Item 1) on IP harness (Figure 9, Item 2).

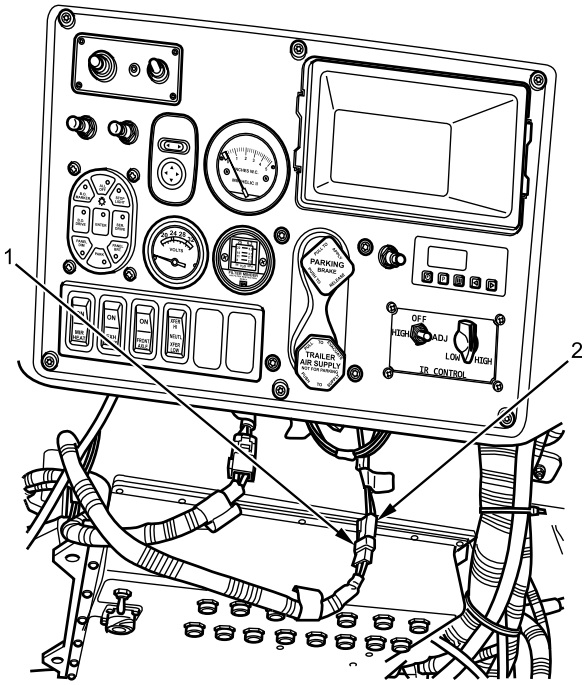

Figure 9. Feed Harness.

RIGHT 12V SOCKET AND FEED HARNESS REMOVAL AND INSTALLATION - (CONTINUED)

3. Secure 12V feed harness with new cable lock strap (Figure 10, Item 2) on driver selector console (Figure 10, Item 1).

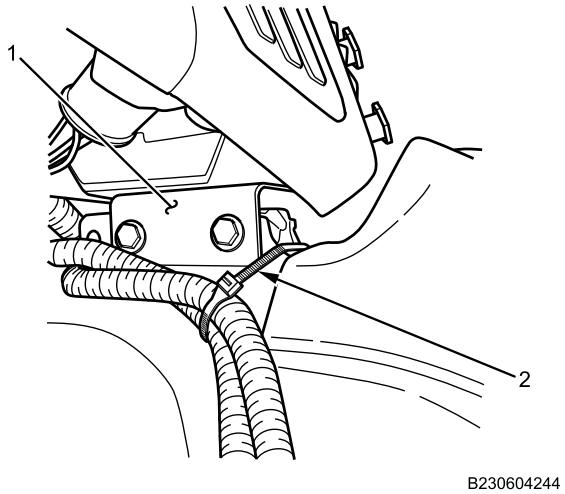

Figure 10. Cable Lock Strap.

4. Route 12V feed harness (Figure 11, Item 1 and 3) from driver selector console (Figure 11, Item 4) through electrical harness storage duct (Figure 11, Item 2).

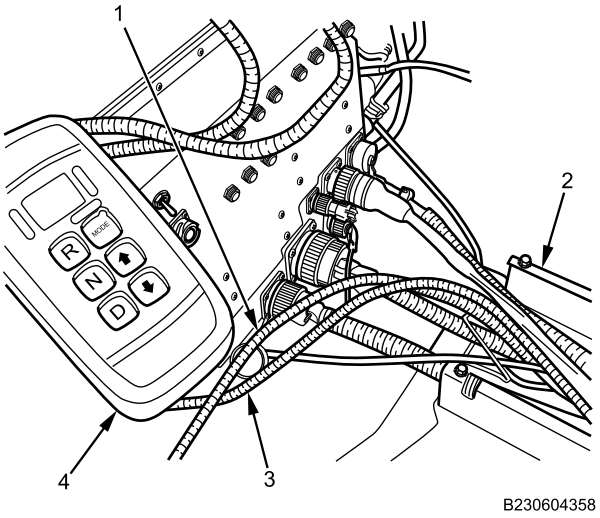

Figure 11. 12V Power Outlet Harness.

RIGHT 12V SOCKET AND FEED HARNESS REMOVAL AND INSTALLATION - (CONTINUED)

5. Install eight bolts (Figure 12, Item 9) securing (PDM) harness electrical storage shield (Figure 12, Item 2) to floor. Tighten bolts securely.

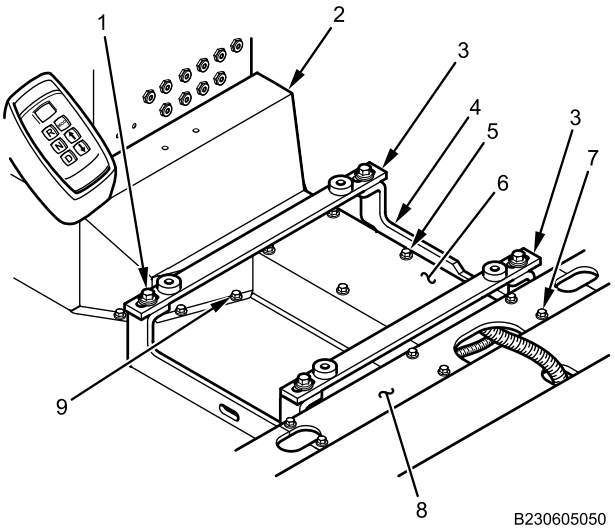

Figure 12. Electrical Harness Storage Duct Center Rear Cover.

6. Install six bolts (Figure 12, Item 5) on electrical harness storage duct center cover (Figure 12, Item 6) and tighten securely.
7. Install four bolts (Figure 12, Item 1) with flat washers, and new lockwashers securing crossbars (Figure 12, Item 3) to center mounting bracket (Figure 12, Item 4). Tighten bolts securely.
8. Install electrical harness storage duct rear center cover (Figure 12, Item 8) with six bolts (Figure 12, Item 7) and tighten securely.
9. Push 12V socket (Figure 13, Item 2) into junction box (Figure 13, Item 3) and install 12V socket retainer (Figure 13, Item 1) on socket by turning retainer clockwise. Tighten retainer securely.

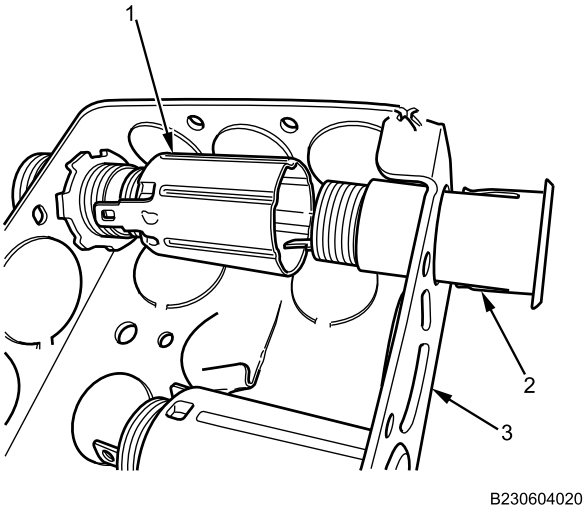

Figure 13. Junction Box.

RIGHT 12V SOCKET AND FEED HARNESS REMOVAL AND INSTALLATION - (CONTINUED)

10. Push wires (Figure 14, Item 5) on socket terminals (Figure 14, Item 1).

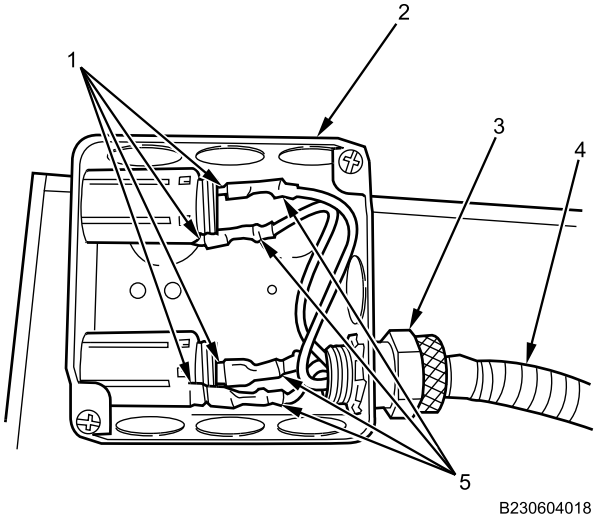

Figure 14. Right Side Junction Box Wires.

11. Install wire harness (Figure 14, Item 4) on junction box (Figure 14, Item 2) by turning connector (Figure 14, Item 3) clockwise. Tighten securely.
12. Install two screws (Figure 15, Item 1) on junction box cover (Figure 15, Item 2). Tighten screws securely.

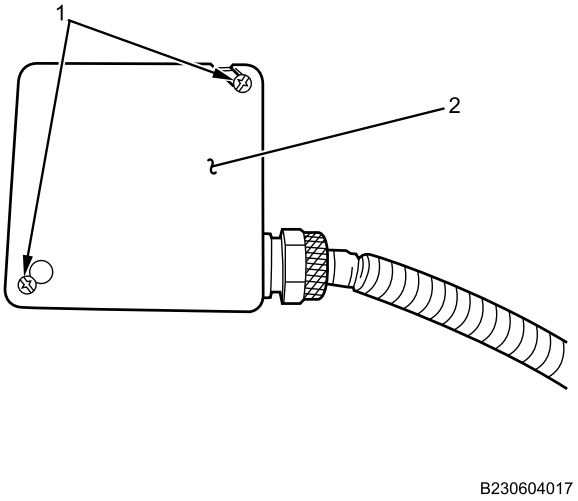

Figure 15. Junction Box Cover Screws.

RIGHT 12V SOCKET AND FEED HARNESS REMOVAL AND INSTALLATION - (CONTINUED)

13. Install 12V junction box (Figure 16, Item 2) on gunner platform stand (Figure 16, Item 3) with two screws (Figure 16, Item 1). Tighten screws securely.

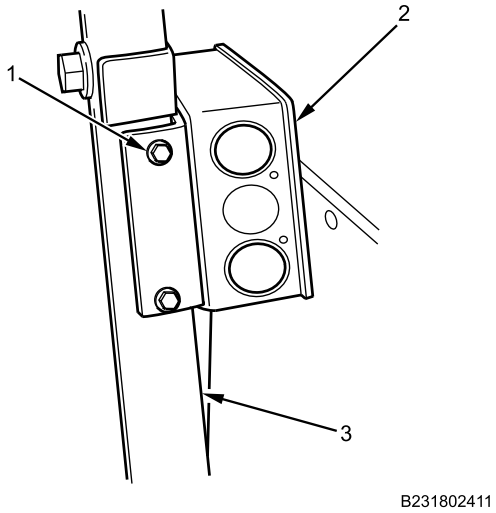

Figure 16. 12V Junction Box.

END OF TASK

FOLLOW-ON MAINTENANCE

1. Verify right 12V socket operation (TM 9-2355-106-10).
2. Remove wheel chocks (TM 9-2355-106-10).

END OF TASK

END OF WORK PACKAGE

FIELD MAINTENANCE

FRONT AND REAR CLEARANCE LIGHTS ROOF HARNESS REMOVAL AND INSTALLATION

INITIAL SETUP:

Tools and Special Tools
General Mechanic's Tool Kit (GMTK) (WP 0795, Item 37)

Materials/Parts
Grease (WP 0794, Item 22)
Cable lock straps - (4) (WP 0796, Item 124)

References
TM 9-2355-106-10
TM 9-2355-106-23P
WP 0782

Equipment Condition
Parking brake set (TM 9-2355-106-10)
Transmission set in NEUTRAL (N) (TM 9-2355-106-10)
Engine off (TM 9-2355-106-10)
MAIN POWER switch off (TM 9-2355-106-10)
Wheels chocked (TM 9-2355-106-10)
Rear door/ramp assembly lowered (TM 9-2355-106-10)
Right roof armor front panel removed (WP 0584)
Roof armor front spoiler removed (WP 0585)
Right roof armor middle front panel removed (WP 0586)
Right roof armor middle rear panel removed (WP 0587)
Roof armor rear spoiler removed (WP 0588)
Right roof armor rear panel removed (WP 0589)

WARNING

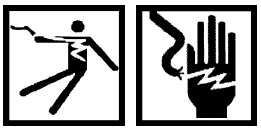

Use extreme caution when testing or working on or around electrical circuits. Always assume that electrical circuits are live. Electrical shock can occur upon contact with voltage high enough to cause current flow through muscles or nerves. On Direct Current (DC) systems, generally 1 milliamp of current can be felt, 5 milliamps can cause severe pain, 15 milliamps can cause loss of muscle control, and 70 milliamps can be fatal. Wear protective clothing; ensure skin, clothing, and surrounding areas are dry; do not wear jewelry; and touch only the insulated, nonmetallic parts of electrical components and testing equipment. To prevent electrical arcing, avoid shorting electrical test probes and jumper wires. Electrical arcing can cause bright flashes of light, capable of causing temporary blindness. If electrical injury occurs, immediately shut off power supply and seek medical assistance. Failure to comply may result in serious injury or death to personnel.

NOTE

Remove cable lock straps as necessary to perform procedure. Note position and size of cable lock straps to aid installation.

Note location and routing of harness in removal to aid installation.

FRONT AND REAR CLEARANCE LIGHTS ROOF HARNESS REMOVAL AND INSTALLATION - (CONTINUED)

REMOVAL

1. Disconnect power connector (Figure 1, Item 3) from front clearance light bar connector (Figure 1, Item 2) next to front clearance light bar (Figure 1, Item 1).

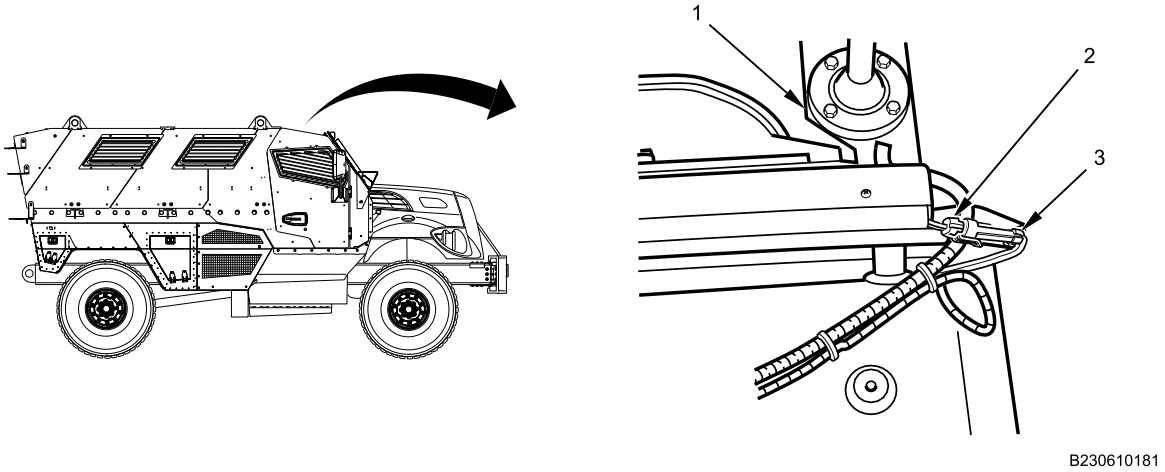

Figure 1. Front Clearance Light Bar Connector.

2. Disconnect clearance lights harness (Figure 2, Item 2) from roof connection by turning nut (Figure 2, Item 1) counterclockwise.

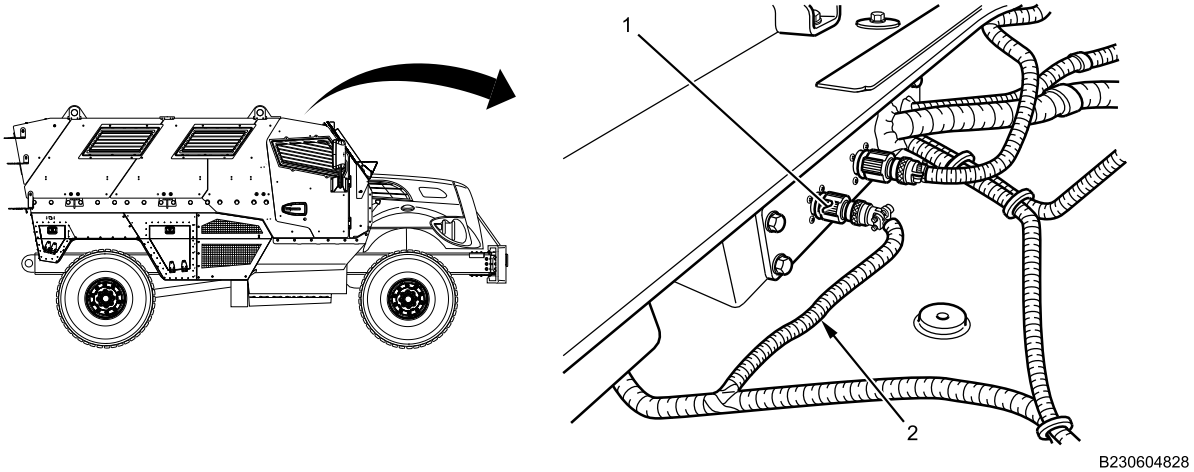

Figure 2. Roof Connection.

FRONT AND REAR CLEARANCE LIGHTS ROOF HARNESS REMOVAL AND INSTALLATION - (CONTINUED)

3. Disconnect power connector (Figure 3, Item 2) from rear clearance light bar harness connector (Figure 3, Item 1) and remove harness (Figure 3, Item 3) from vehicle.

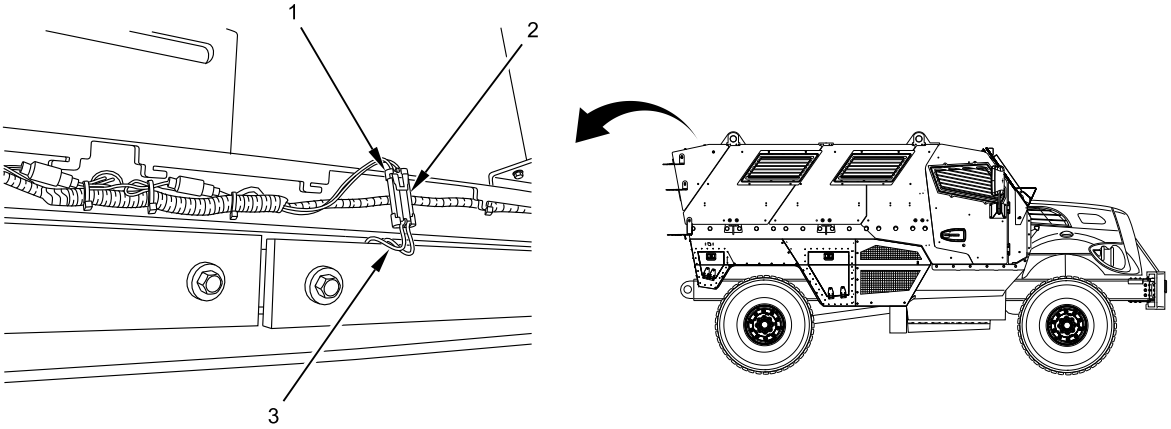

B230604830

Figure 3. Rear Clearance Light Bar Connection.

END OF TASK

INSTALLATION

WARNING

Dielectric grease is harmful to skin and eyes. If grease contacts eyes, rinse thoroughly and contact physician if irritation persists. If skin is contacted, wash thoroughly with soap and water. Failure to comply may result in serious injury to personnel.

NOTE

Apply dielectric grease to all electrical connections before installation.

1. Position harness (Figure 3, Item 3) on vehicle and connect power connector (Figure 3, Item 2) to harness connector (Figure 3, Item 1).

FRONT AND REAR CLEARANCE LIGHTS ROOF HARNESS REMOVAL AND INSTALLATION - (CONTINUED)

2. Connect clearance lights harness (Figure 4, Item 2) to roof connection by turning nut (Figure 4, Item 1) clockwise.

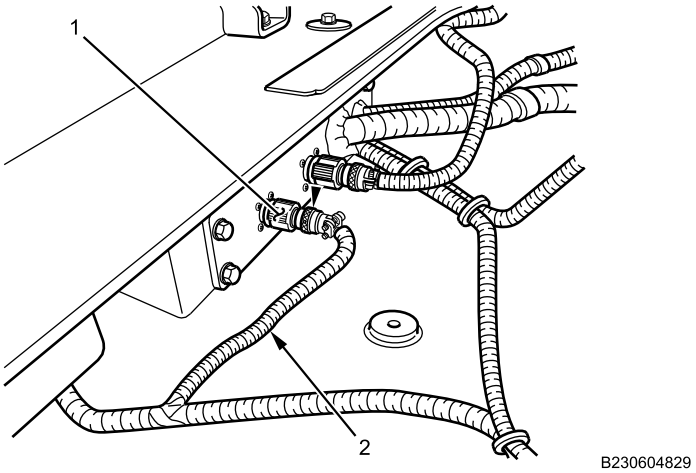

Figure 4. Roof Connection.

3. Connect power connector (Figure 5, Item 3) to front clearance light bar connector (Figure 5, Item 2) next to front clearance light bar (Figure 5, Item 1).

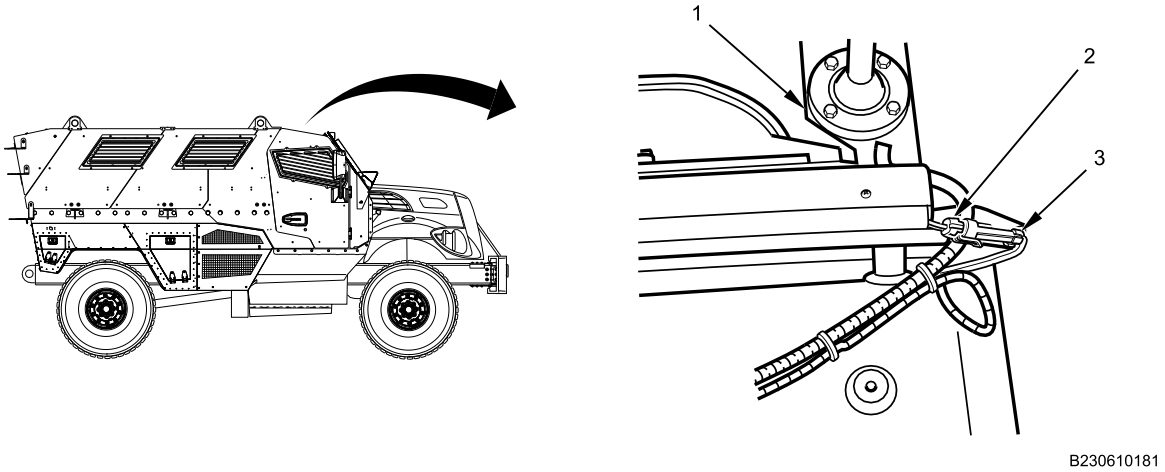

Figure 5. Front Clearance Light Bar Connector.

4. Install new cable lock straps and tighten securely.

END OF TASK

FRONT AND REAR CLEARANCE LIGHTS ROOF HARNESS REMOVAL AND INSTALLATION - (CONTINUED)

FOLLOW-ON MAINTENANCE

1. Install right roof armor rear panel (WP 0589).
2. Install roof armor rear spoiler (WP 0588).
3. Install right roof armor middle rear panel (WP 0587).
4. Install right roof armor middle front panel (WP 0586).
5. Install roof armor front spoiler (WP 0585).
6. Install right roof armor front panel (WP 0584).
7. Turn MAIN POWER switch on (TM 9-2355-106-10).
8. Verify front and rear clearance light bar operation (TM 9-2355-106-10).
9. Raise rear door/ramp assembly to closed position (TM 9-2355-106-10).
10. Turn MAIN POWER switch off (TM 9-2355-106-10).
11. Remove wheel chocks (TM 9-2355-106-10).

END OF TASK

END OF WORK PACKAGE

FIELD MAINTENANCE

CLEARANCE LIGHTS CABIN JUMPER HARNESS REMOVAL AND INSTALLATION

INITIAL SETUP:

Tools and Special Tools
General Mechanic's Tool Kit (GMTK) (WP 0795, Item 37)
Electrical Contact Tool Kit (WP 0795, Item 30)

Materials/Parts
Compound (WP 0794, Item 13)
Grease (WP 0794, Item 22)
Sealing compound (WP 0794, Item 43)
Wire tags (WP 0794, Item 33)
Gloves (WP 0794, Item 18)
Goggles, industrial (WP 0794, Item 20)
Faceshield, industrial (WP 0794, Item 16)
Cable lock strap - (10) (WP 0796, Item 124)
Fasteners - (3) (WP 0796, Item 159)

References
TM 9-2355-106-10
TM 9-2355-106-23P
WP 0786
WP 0782

Equipment Condition
Parking brake set (TM 9-2355-106-10)
Transmission set in NEUTRAL (N) (TM 9-2355-106-10)
Engine off (TM 9-2355-106-10)
MAIN POWER switch off (TM 9-2355-106-10)
Wheels chocked (TM 9-2355-106-10)
Instrument panel cluster closeout removed (WP 0578)
Right front A-pillar cover trim removed (WP 0642)

WARNING

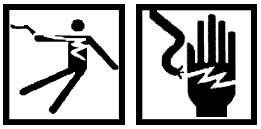

Use extreme caution when testing or working on or around electrical circuits. Always assume that electrical circuits are live. Electrical shock can occur upon contact with voltage high enough to cause current flow through muscles or nerves. On Direct Current (DC) systems, generally 1 milliamp of current can be felt, 5 milliamps can cause severe pain, 15 milliamps can cause loss of muscle control, and 70 milliamps can be fatal. Wear protective clothing; ensure skin, clothing, and surrounding areas are dry; do not wear jewelry; and touch only the insulated, nonmetallic parts of electrical components and testing equipment. To prevent electrical arcing, avoid shorting electrical test probes and jumper wires. Electrical arcing can cause bright flashes of light, capable of causing temporary blindness. If electrical injury occurs, immediately shut off power supply and seek medical assistance. Failure to comply may result in serious injury or death to personnel.

NOTE

Remove cable lock straps as necessary to perform procedure. Note position and size of cable lock straps to aid installation.

CLEARANCE LIGHTS CABIN JUMPER HARNESS REMOVAL AND INSTALLATION - (CONTINUED)

REMOVAL

1. Disconnect clearance lights roof harness connector (Figure 1, Item 1) from roof pass-through cover plate (Figure 1, Item 3).

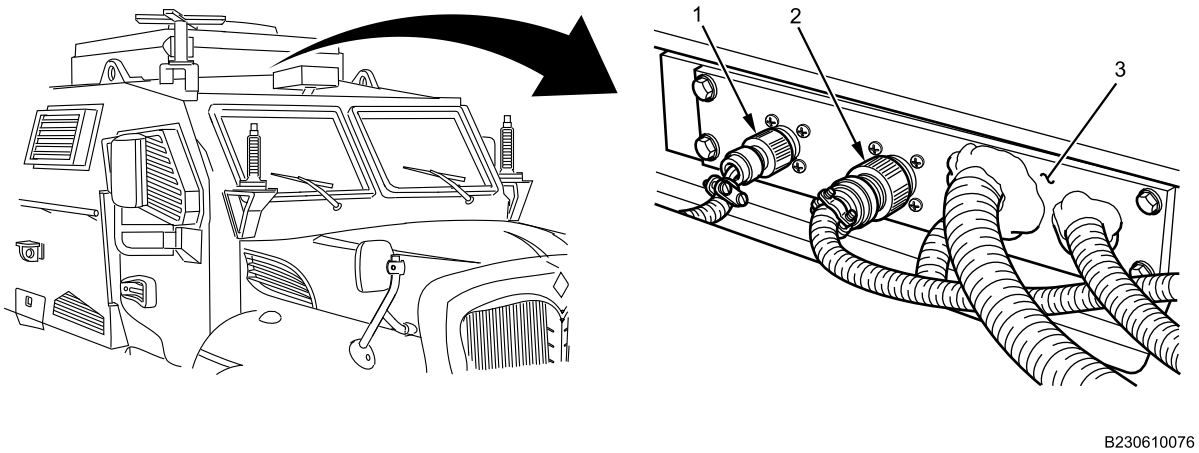

Figure 1. Roof Connections.

2. Disconnect spotlight exterior harness connector (Figure 1, Item 2) from roof pass-through cover plate (Figure 1, Item 3).
3. Remove four bolts (Figure 2, Item 1) from roof pass-through cover plate (Figure 2, Item 4) and pull cover plate away to expose nuts on back side of connector (Figure 2, Item 3).

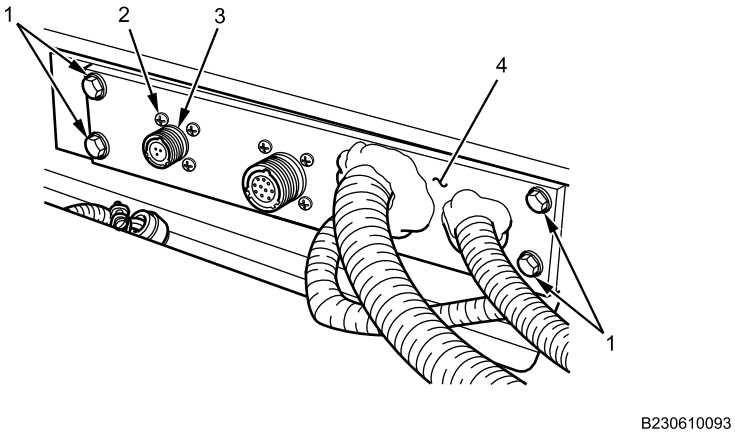

Figure 2. Roof Pass-Through Cover Plate.

4. Remove four nuts (hidden from view) and screws (Figure 2, Item 2) from roof pass-through connector (Figure 2, Item 3).

CLEARANCE LIGHTS CABIN JUMPER HARNESS REMOVAL AND INSTALLATION - (CONTINUED)

5. Remove and discard four cable lock straps (Figure 3, Item 1, 2, 3 and 4) securing harnesses together.

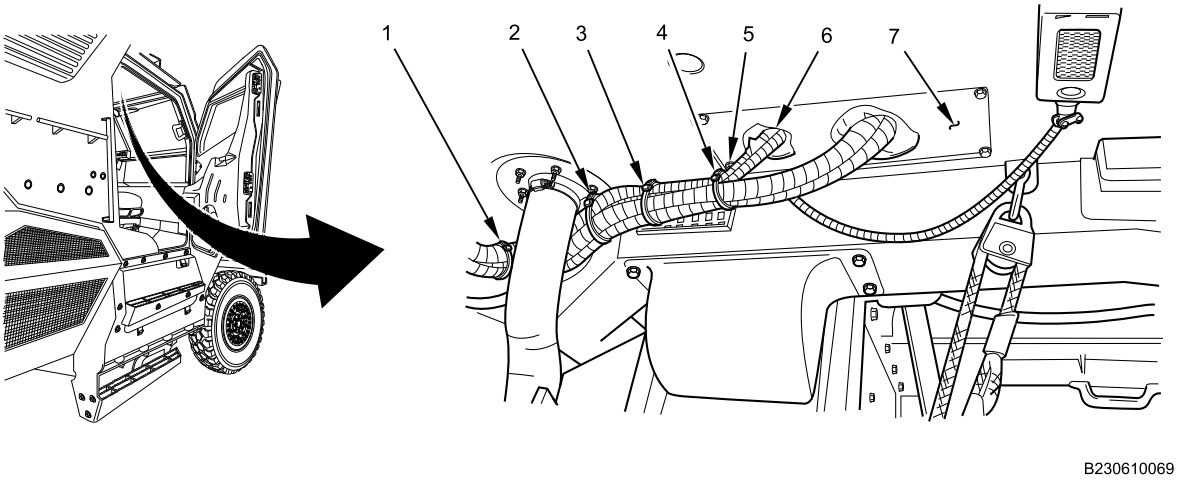

Figure 3. Roof Access Plate.

6. Pull the clearance lights cabin jumper harness (Figure 3, Item 5) through the opening (Figure 3, Item 6) in the roof access plate (Figure 3, Item 7).
7. Remove three fasteners (Figure 4, Item 2) and door opening trim cover (Figure 4, Item 1). Discard fasteners.

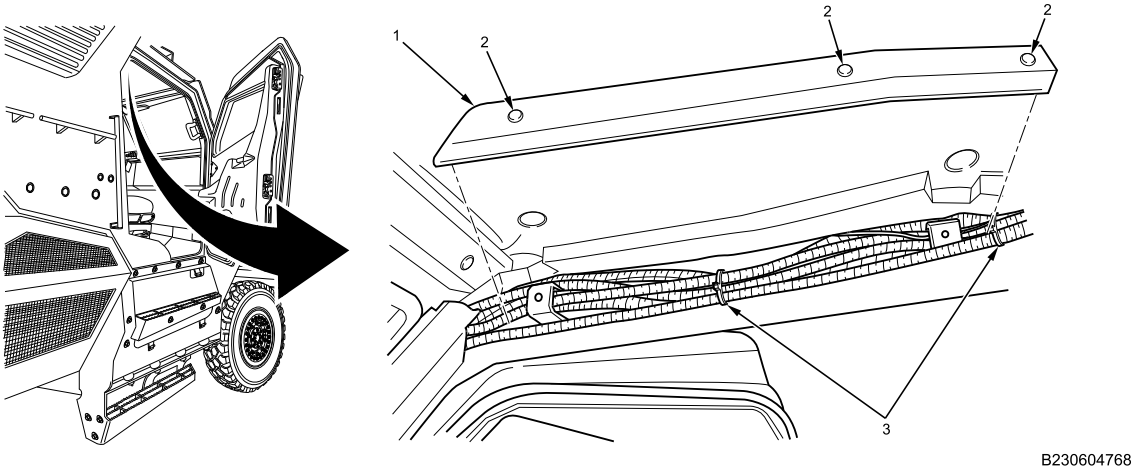

Figure 4. Door Opening Trim.

8. Remove and discard two cable lock straps (Figure 4, Item 3).

CLEARANCE LIGHTS CABIN JUMPER HARNESS REMOVAL AND INSTALLATION - (CONTINUED)

NOTE

The clearance lights cabin jumper harness to instrument panel (IP) harness connection can be identified by a 2-pin connector with a black wire (pin A) and a white wire (pin B) on the cabin jumper side, and a brown wire (pin A) and a white wire (pin B) on the IP harness side.

It will be necessary to remove the pins from this connector in order to remove the harness from the vehicle. Make a note of their position in the connector before removing them.

9. Disconnect clearance lights cabin jumper harness connector (Figure 5, Item 1) from the instrument panel (IP) harness connector (Figure 5, Item 2) and position clearance lights cabin jumper harness (Figure 5, Item 3) apart from other harnesses.

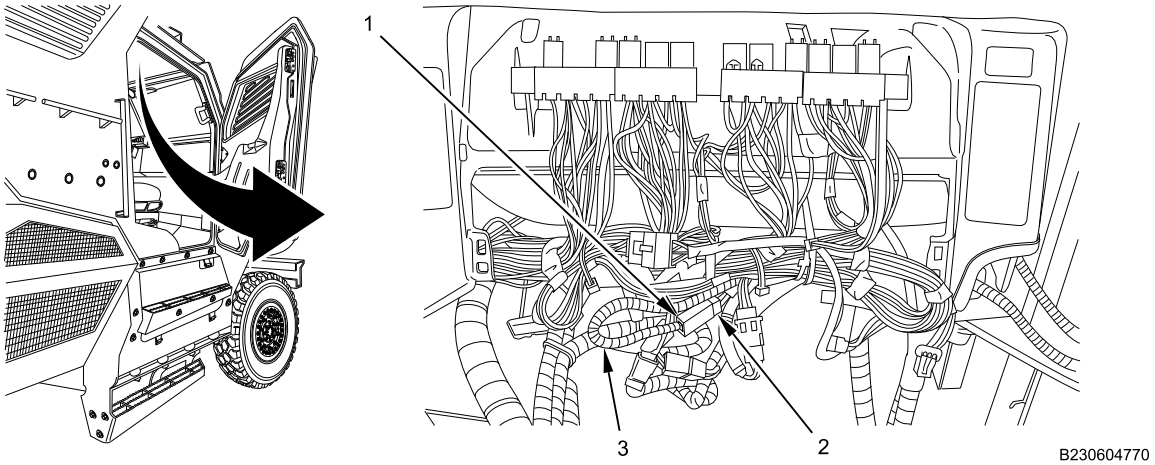

Figure 5. Clearance Lights Jumper Harness.

NOTE

Removing wires from spotlight connector allows removal of harness through bracket above right front door.

10. Open wire lock (Figure 6, Item 1) from spotlight connector body (Figure 6, Item 2).

CLEARANCE LIGHTS CABIN JUMPER HARNESS REMOVAL AND INSTALLATION - (CONTINUED)

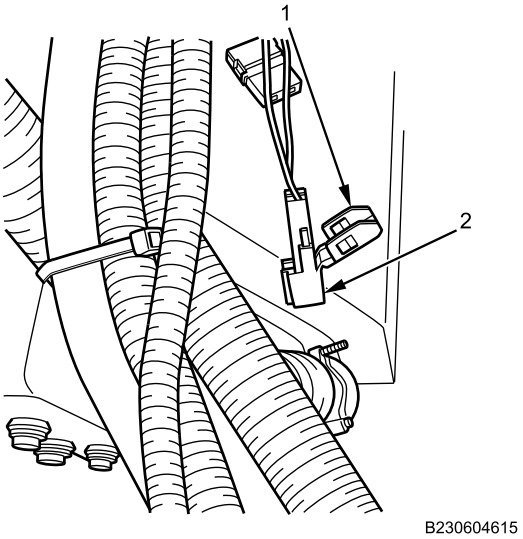

Figure 6. Connector Wire Removal.

NOTE

Note position of wire terminals in connector body prior to removal to aid installation.

11. Using contact removal tool (Figure 7, Item 3), remove wiring terminals (Figure 7, Item 2) from connector body (Figure 7, Item 1) by unlocking wire terminal retaining tabs and releasing terminal locking tabs.

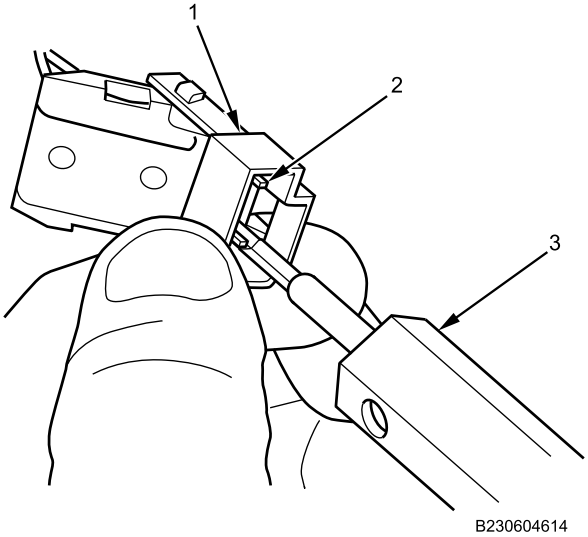

Figure 7. Contact Tool.

CLEARANCE LIGHTS CABIN JUMPER HARNESS REMOVAL AND INSTALLATION - (CONTINUED)

NOTE

Harness is removed by pulling two-pin connector end (with pins removed from connector) up the A-pillar and through the door opening trim cover pushpin brackets.

12. Remove harness by pulling it up and out of vehicle.

END OF TASK

INSTALLATION

WARNING

Dielectric grease is harmful to skin and eyes. If grease contacts eyes, rinse thoroughly and contact physician if irritation persists. If skin is contacted, wash thoroughly with soap and water. Failure to comply may result in serious injury to personnel.

Corrosion preventive compound is toxic. Use only in well-ventilated area. Do not get in eyes; wear chemical safety goggles and full-face shield when using. Avoid contact with skin and wear rubber or plastic, solvent-resistant gloves. In case of contact, remove contaminated clothing and immediately wash area with soap and water. If compound contacts eyes, flush eyes with large amounts of water for at least 15 minutes and get immediate medical attention. If swallowed, do not induce vomiting; contact a physician immediately. Failure to comply may result in serious injury or death to personnel.

NOTE

Apply dielectric grease to all electrical contacts before installation.

Apply corrosion preventive compound on all nuts, screws and bolts before installation.

1. Install clearance lights cabin jumper harness into position, making sure to route it through the bracket above the door opening.

NOTE

Ensure wire terminals are installed in correct position in connector body.

Make sure locking tab (Figure 8, Item 2) engages with connector (Figure 8, Item 3).

2. Insert pin (Figure 8, Item 4) into the connector (Figure 8, Item 3) until locking tab snaps into place. If it does, pin will not be able to be pulled back out of connector (Figure 8, Item 3). Bend locking tab upward until it engages with connector (Figure 8, Item 3). Install both pins into connector (Figure 8, Item 3) using this method.

CLEARANCE LIGHTS CABIN JUMPER HARNESS REMOVAL AND INSTALLATION - (CONTINUED)

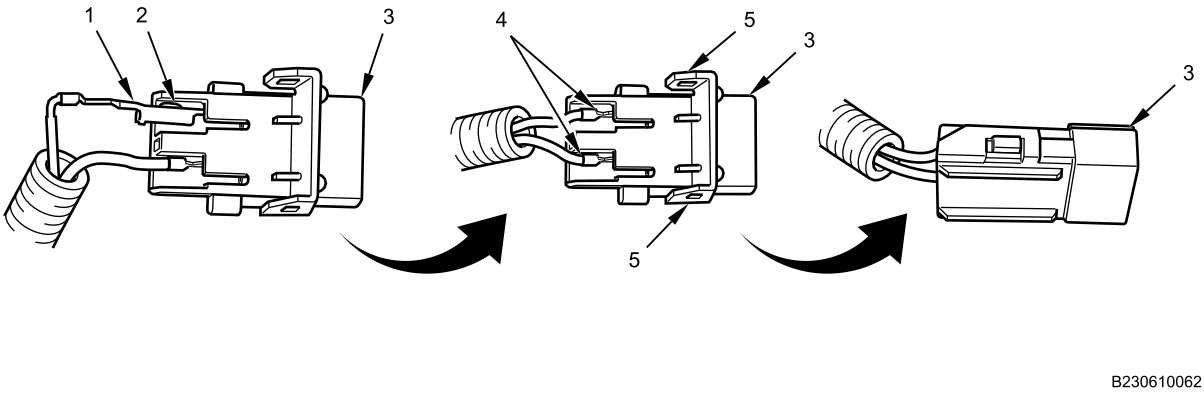

Figure 8. Connector Pin Installation

3. Push the connector cover/lock tabs (Figure 8, Item 5) down and engage the two tabs (Figure 8, Item 5) of the connector (Figure 8, Item 3).
4. Position clearance lights cabin jumper harness (Figure 9, Item 3) to connect clearance lights cabin jumper harness connector (Figure 9, Item 1) to instrument panel harness connector (Figure 9, Item 2).

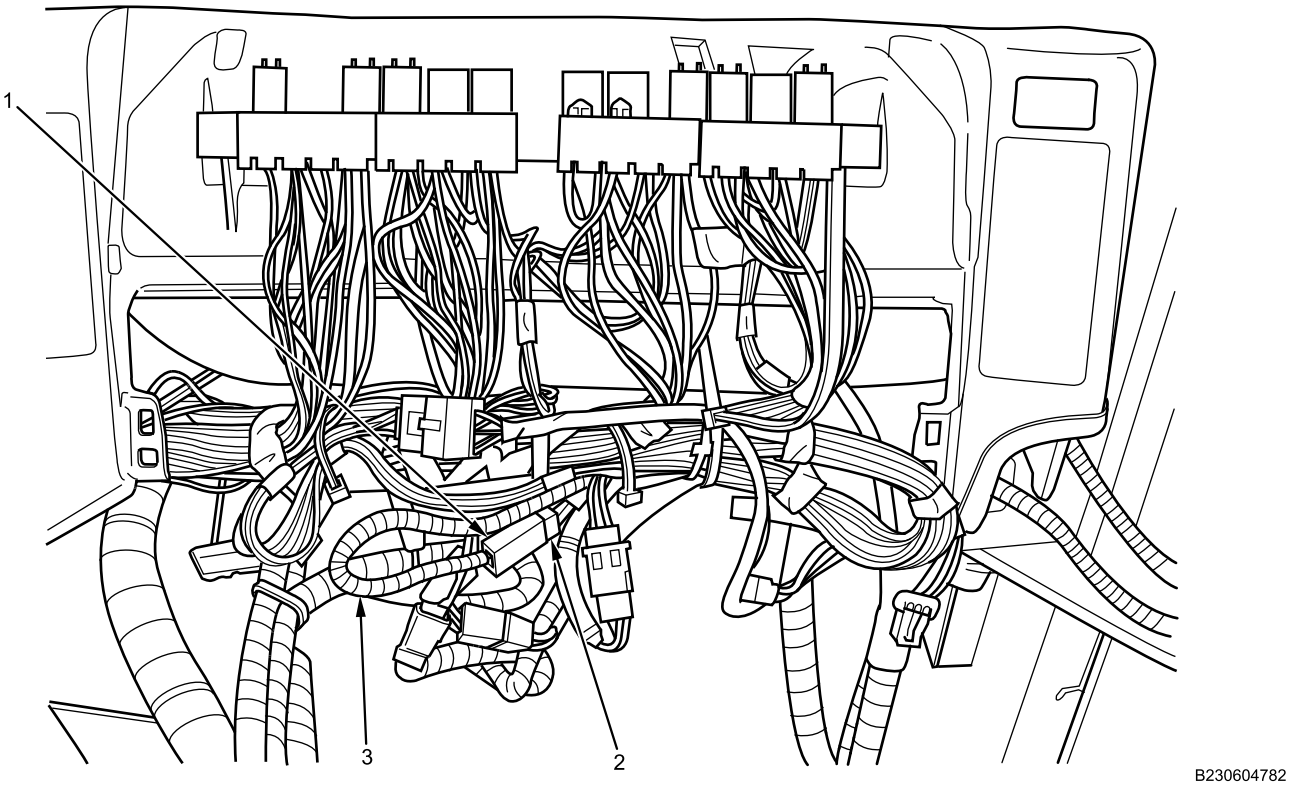

Figure 9. Clearance Lights Jumper Harness.

CLEARANCE LIGHTS CABIN JUMPER HARNESS REMOVAL AND INSTALLATION - (CONTINUED)

5. Install two cable lock straps (Figure 10, Item 3) over harnesses in door opening.

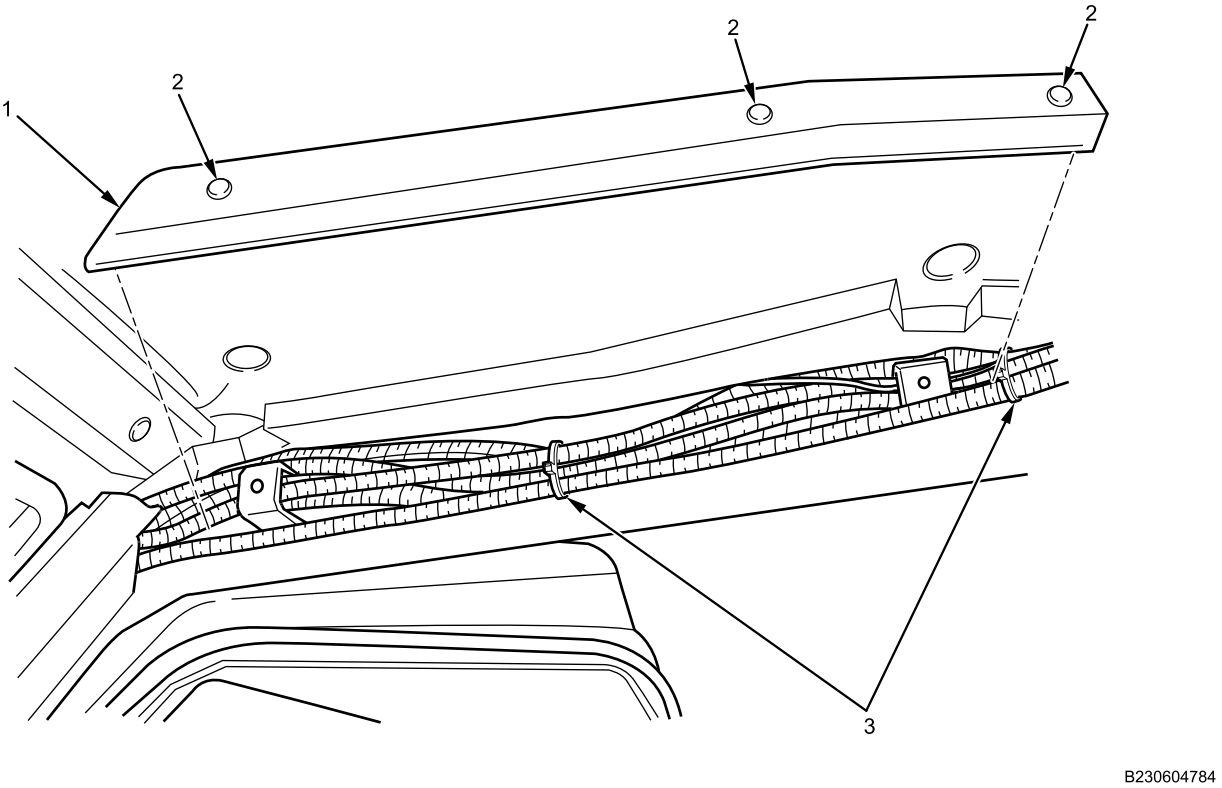

Figure 10. Door Opening Trim.

6. Install door opening trim cover (Figure 10, Item 1) with three new fasteners (Figure 10, Item 2).
7. Push clearance lights cabin jumper harness (Figure 11, Item 5) through the opening (Figure 11, Item 6) in the roof access plate (Figure 11, Item 7).

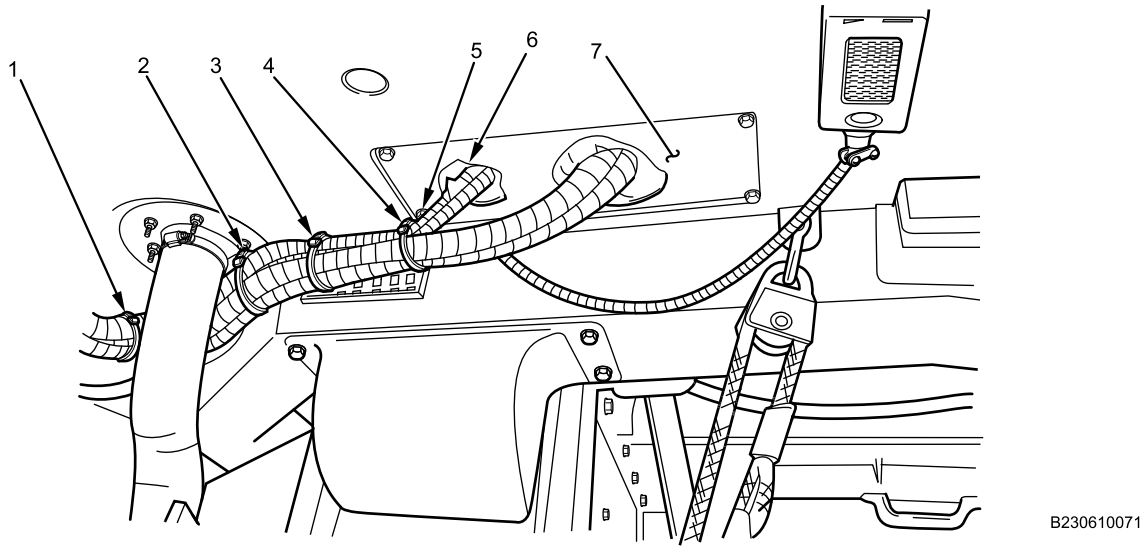

Figure 11. Roof Access Plate.

CLEARANCE LIGHTS CABIN JUMPER HARNESS REMOVAL AND INSTALLATION - (CONTINUED)

8. Install four cable clock straps (Figure 11, Item 1, 2, 3 and 4) to secure harnesses together.
9. Position clearance lights connector (Figure 12, Item 3) and install four screws (Figure 12, Item 2) and nuts (hidden from view) on pass-through cover plate clearance lights connector (Figure 12, Item 3).

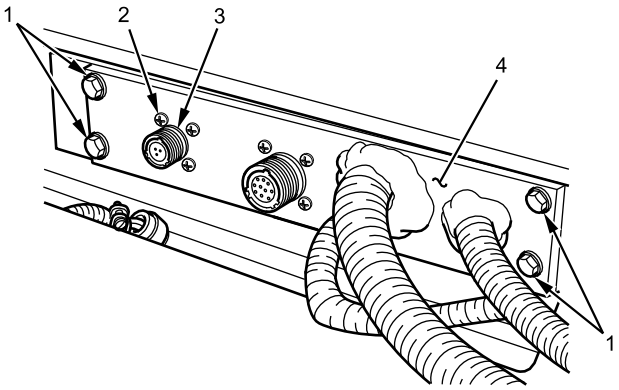

Figure 12. Roof Pass-Through Cover Plate.

WARNING

Sealing compound is toxic. Use only in well-ventilated area. Do not get in eyes; wear chemical safety goggles and full-face shield when using. Avoid contact with skin and wear rubber or plastic, solvent-resistant gloves. In case of contact, remove contaminated clothing and immediately wash area with soap and water. If compound contacts eyes, flush eyes with large amounts of water for at least 15 minutes and get immediate medical attention. If swallowed, do not induce vomiting; contact a physician immediately. Failure to comply may result in serious injury or death to personnel.

10. Apply sealing compound on cover plate (Figure 12, Item 4).
11. Install pass-through cover plate (Figure 12, Item 4) with four bolts (Figure 12, Item 1) and tighten securely.

CLEARANCE LIGHTS CABIN JUMPER HARNESS REMOVAL AND INSTALLATION - (CONTINUED)

12. Connect clearance lights roof harness connector (Figure 13, Item 1) on roof pass-through cover plate (Figure 13, Item 3).

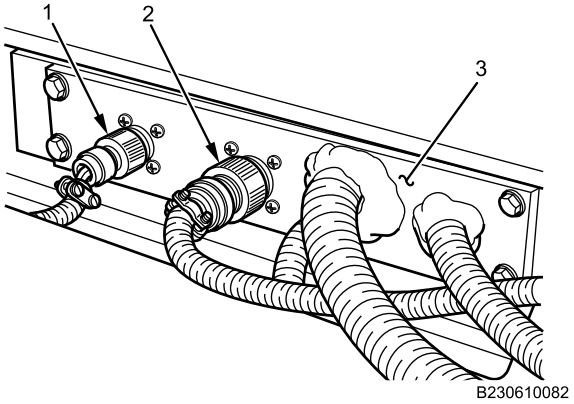

Figure 13. Roof Connections.

13. Connect spotlight exterior harness connector (Figure 13, Item 2) on roof pass-through cover plate (Figure 13, Item 3).
14. Install all cable lock straps and tighten securely.

END OF TASK

FOLLOW-ON MAINTENANCE

1. Install instrument panel cluster closeout (WP 0578).
2. Install right front A-pillar cover trim (WP 0642).
3. Turn MAIN POWER switch on (TM 9-2355-106-10).
4. Verify roof clearance lights operation (TM 9-2355-106-10).
5. Turn MAIN POWER switch off (TM 9-2355-106-10).
6. Remove wheel chocks (TM 9-2355-106-10).

END OF TASK

END OF WORK PACKAGE

FIELD MAINTENANCE

24V POWER DISTRIBUTION MODULE (PDM) REMOVAL AND INSTALLATION

INITIAL SETUP:

Tools and Special Tools
General Mechanic's Tool Kit (GMTK) (WP 0795, Item 37)

Materials/Parts
Wire tags (WP 0794, Item 33)
Cable lock strap (WP 0796, Item 124)

References
TM 9-2355-106-10
TM 9-2355-106-23P
WP 0786
WP 0782

Equipment Condition
Parking brake set (TM 9-2355-106-10)
Transmission set in NEUTRAL (N) (TM 9-2355-106-10)
Engine off (TM 9-2355-106-10)
MAIN POWER switch off (TM 9-2355-106-10)
Wheels chocked (TM 9-2355-106-10)
Batteries disconnected (WP 0404)

WARNING

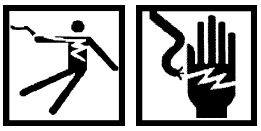

Use extreme caution when testing or working on or around electrical circuits. Always assume that electrical circuits are live. Electrical shock can occur upon contact with voltage high enough to cause current flow through muscles or nerves. On Direct Current (DC) systems, generally 1 milliamp of current can be felt, 5 milliamps can cause severe pain, 15 milliamps can cause loss of muscle control, and 70 milliamps can be fatal. Wear protective clothing; ensure skin, clothing, and surrounding areas are dry; do not wear jewelry; and touch only the insulated, nonmetallic parts of electrical components and testing equipment. To prevent electrical arcing, avoid shorting electrical test probes and jumper wires. Electrical arcing can cause bright flashes of light, capable of causing temporary blindness. If electrical injury occurs, immediately shut off power supply and seek medical assistance. Failure to comply may result in serious injury or death to personnel.

NOTE

Remove cable lock straps as necessary to perform procedure. Note position and size of cable lock straps to aid installation.

24V POWER DISTRIBUTION MODULE (PDM) REMOVAL AND INSTALLATION - (CONTINUED)

REMOVAL

1. Remove two bolts (Figure 1, Item 1) securing drive selector console (Figure 1, Item 3) to instrument panel (Figure 1, Item 2). Place drive selector console aside.

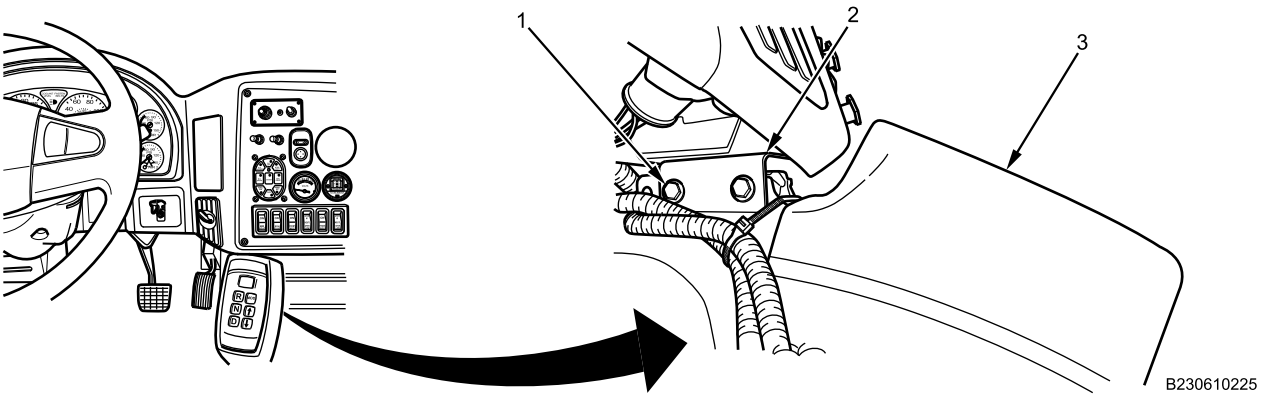

Figure 1. Drive Selector Console.

NOTE

Label all cables with wire tags before removal.

2. Remove and discard cable lock strap (Figure 2, Item 2) securing electrical cables (Figure 2, Item 3, 4 and 6) on 24V PDM (Figure 2, Item 1).

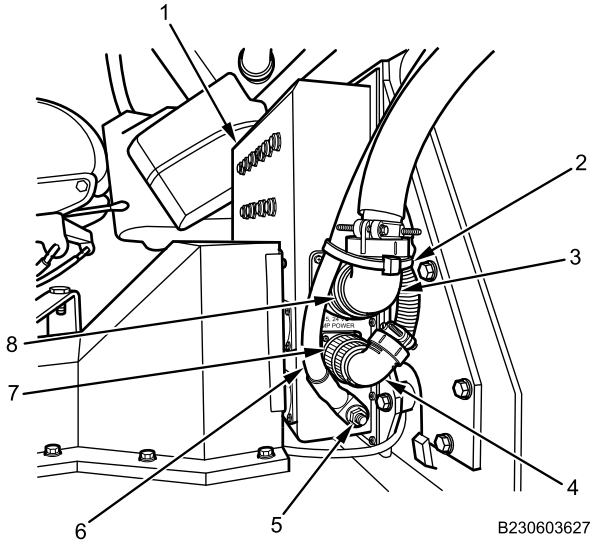

Figure 2. Electrical Cables, Right Side of 24V PDM.

3. Remove nut (Figure 2, Item 5) securing ground cable (Figure 2, Item 6) to 24V PDM (Figure 2, Item 1). Place ground cable aside.
4. Disconnect upper electrical cable (Figure 2, Item 3) from 24V PDM (Figure 2, Item 1) by turning metal collar on connector (Figure 2, Item 8) counterclockwise. Place cable aside.
5. Disconnect lower electrical cable (Figure 2, Item 4) from 24V PDM (Figure 2, Item 1) by turning metal collar on connector (Figure 2, Item 7) counterclockwise. Place cable aside.

24V POWER DISTRIBUTION MODULE (PDM) REMOVAL AND INSTALLATION - (CONTINUED)

6. Remove eight screws (Figure 3, Item 3) securing PDM harness electrical storage shield (Figure 3, Item 1) to floor (Figure 3, Item 2). Remove PDM harness electrical storage shield.

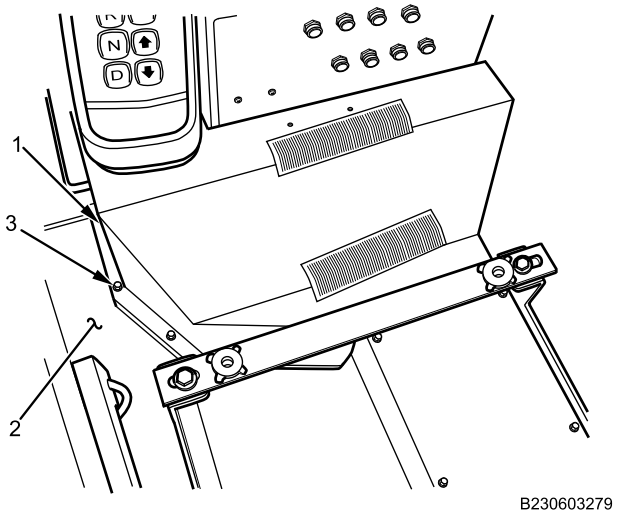

Figure 3. Front Cable Shield.

NOTE

Electrical cable configurations may vary depending on mission equipment needs. Ensure all electrical cables and connections are disconnected from the 24V PDM before it is removed.

7. Disconnect electrical cable (Figure 4, Item 3) from 24V PDM (Figure 4, Item 1) by turning metal collar on connector (Figure 4, Item 2) counterclockwise. Place cable aside.

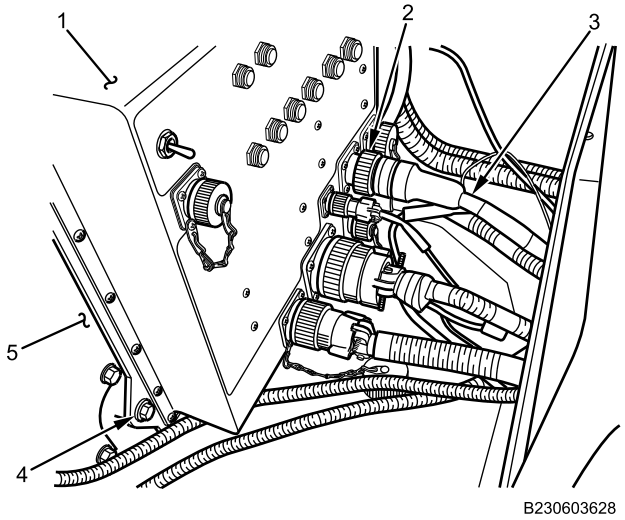

Figure 4. Electrical Cables.

8. Remove four bolts (Figure 4, Item 4) securing 24V PDM (Figure 4, Item 1) to engine access cover (Figure 4, Item 5). Remove 24V PDM.

END OF TASK

24V POWER DISTRIBUTION MODULE (PDM) REMOVAL AND INSTALLATION - (CONTINUED)

INSTALLATION

1. Install 24V PDM (Figure 5, Item 1) on engine access cover (Figure 5, Item 5) with four bolts (Figure 5, Item 4). Tighten bolts securely.

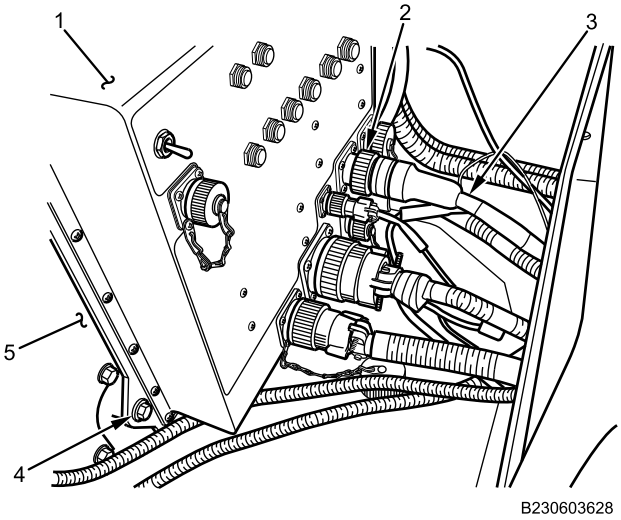

Figure 5. 24V PDM.

NOTE

Refer to wire tags on cables for proper location.

2. Install all electrical cables (Figure 5, Item 3) on 24V PDM (Figure 5, Item 1) by turning metal collar (Figure 5, Item 2) on connector clockwise.
3. Secure PDM harness electrical storage shield (Figure 6, Item 1) to floor (Figure 6, Item 2) with eight screws (Figure 6, Item 3). Tighten screws securely.

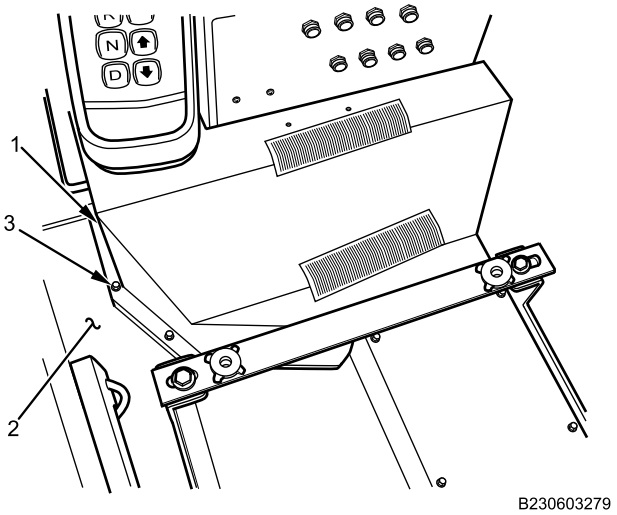

Figure 6. Front Cable Shield.

4. Install lower electrical cable (Figure 7, Item 3) on 24V PDM (Figure 7, Item 1) by turning metal collar (Figure 7, Item 7) on connector clockwise.

24V POWER DISTRIBUTION MODULE (PDM) REMOVAL AND INSTALLATION - (CONTINUED)

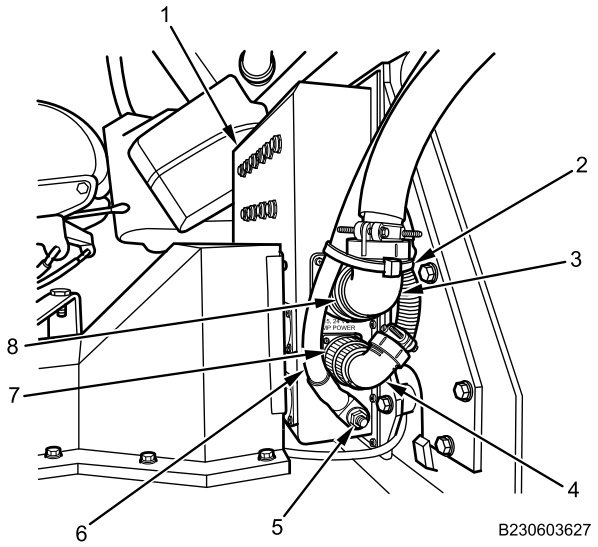

Figure 7. Electrical Cables, Right Side of 24V PDM.

5. Install upper electrical cable (Figure 7, Item 3) on 24V PDM (Figure 7, Item 1) by turning metal collar (Figure 7, Item 8) on connector clockwise.
6. Install ground cable (Figure 7, Item 6) on 24V PDM (Figure 7, Item 1) with nut (Figure 7, Item 5). Tighten nut securely.
7. Secure electrical cables (Figure 7, Item 3, 4 and 6) on 24V PDM (Figure 7, Item 1) with new cable lock strap (Figure 7, Item 2).
8. Install drive selector console (Figure 8, Item 3) on instrument panel (Figure 8, Item 2) with two bolts (Figure 8, Item 1). Tighten bolts securely.

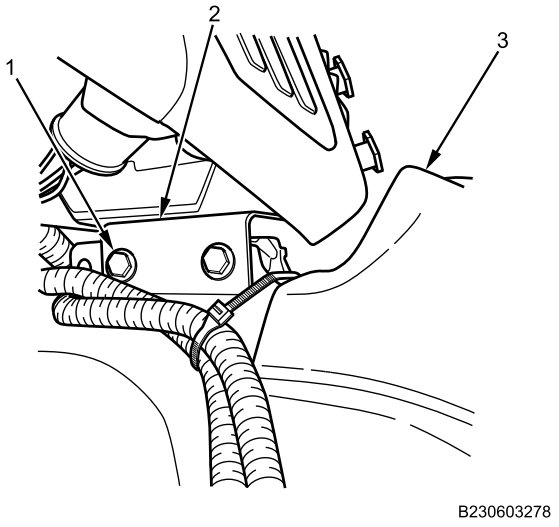

Figure 8. Drive Selector Console.

END OF TASK

24V POWER DISTRIBUTION MODULE (PDM) REMOVAL AND INSTALLATION - (CONTINUED)

FOLLOW-ON MAINTENANCE

1. Connect batteries (WP 0404).
2. Turn MAIN POWER switch on (TM 9-2355-106-10).
3. Verify proper function of 24V PDM (TM 9-2355-106-10).
4. Turn MAIN POWER switch off (TM 9-2355-106-10).
5. Remove wheel chocks (TM 9-2355-106-10).

END OF TASK

END OF WORK PACKAGE

FIELD MAINTENANCE

REAR DOOR/RAMP FEED WIRING HARNESS REMOVAL AND INSTALLATION

INITIAL SETUP:

Tools and Special Tools
General Mechanic's Tool Kit (GMTK) (WP 0795, Item 37)

Materials/Parts
Grease (WP 0794, Item 22)
Wire tags (WP 0794, Item 33)
Cable lock strap - (10) (WP 0796, Item 134)

References
TM 9-2355-106-10
TM 9-2355-106-23P
WP 0786
WP 0782

Equipment Condition
Parking brake set (TM 9-2355-106-10)
Transmission set in NEUTRAL (N) (TM 9-2355-106-10)
Engine shut off (TM 9-2355-106-10)
MAIN POWER switch off (TM 9-2355-106-10)
Wheels chocked (TM 9-2355-106-10)
Front center floor panel removed (WP 0659)
Center floor panel removed (WP 0660)
Rear center floor panel removed (WP 0661)
Rear floor panel removed (WP 0662)

WARNING

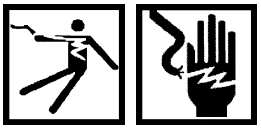

Use extreme caution when testing or working on or around electrical circuits. Always assume that electrical circuits are live. Electrical shock can occur upon contact with voltage high enough to cause current flow through muscles or nerves. On Direct Current (DC) systems, generally 1 milliamp of current can be felt, 5 milliamps can cause severe pain, 15 milliamps can cause loss of muscle control, and 70 milliamps can be fatal. Wear protective clothing; ensure skin, clothing, and surrounding areas are dry; do not wear jewelry; and touch only the insulated, nonmetallic parts of electrical components and testing equipment. To prevent electrical arcing, avoid shorting electrical test probes and jumper wires. Electrical arcing can cause bright flashes of light, capable of causing temporary blindness. If electrical injury occurs, immediately shut off power supply and seek medical assistance. Failure to comply may result in serious injury or death to personnel.

NOTE

Note harness routing and location of cable lock straps to aid installation.

REAR DOOR/RAMP FEED WIRING HARNESS REMOVAL AND INSTALLATION - (CONTINUED)

REMOVAL

1. Remove eight bolts (Figure 1, Item 9) and PDM harness electrical storage shield (Figure 1, Item 2).

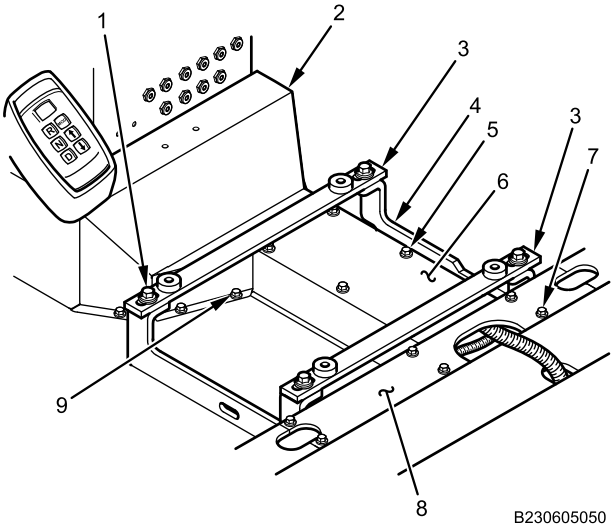

Figure 1. Power Distribution Module (PDM) Harness Electrical Storage Shield and Duct Covers.

2. Remove four bolts (Figure 1, Item 1), lockwashers, flat washers, and remove two crossbars (Figure 1, Item 3) mounted to center mounting brackets (Figure 1, Item 4).
3. Remove six bolts (Figure 1, Item 5) and electrical harness storage duct center cover (Figure 1, Item 6).
4. Remove six bolts (Figure 1, Item 7) and electrical harness storage duct rear center cover (Figure 1, Item 8).

REAR DOOR/RAMP FEED WIRING HARNESS REMOVAL AND INSTALLATION - (CONTINUED)

5. Disconnect rear door/ramp feed harness connector (Figure 2, Item 2) to PDM (Figure 2, Item 1).

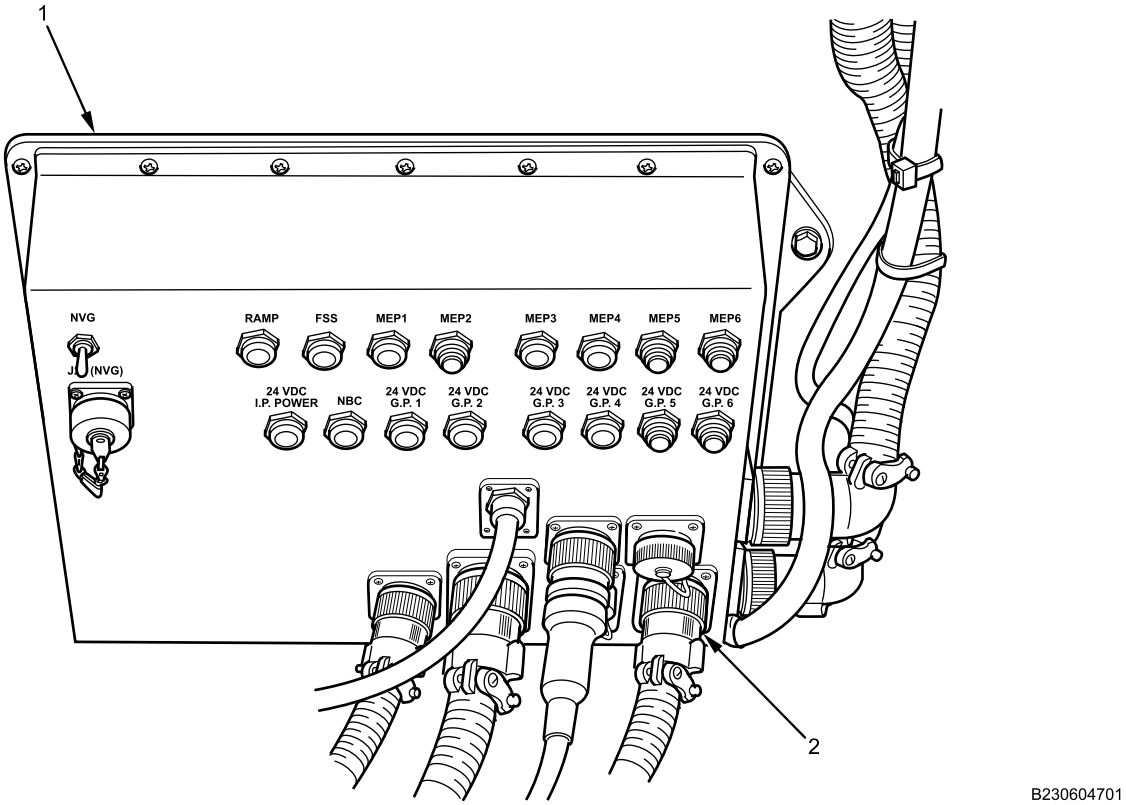

Figure 2. Rear Door/Ramp Feed Harness Connection.

6. Remove and discard cable lock straps. Remove rear door/ramp feed wiring harness.

END OF TASK

INSTALLATION

1. Install rear door/ramp feed harness and new cable lock straps as noted in removal.

WARNING

Dielectric grease is harmful to skin and eyes. If grease contacts eyes, rinse thoroughly and contact physician if irritation persists. If skin is contacted, wash thoroughly with soap and water. Failure to comply may result in serious injury to personnel.

2. Apply dielectric grease to all rear door/ramp feed wiring harness electrical connections.

REAR DOOR/RAMP FEED WIRING HARNESS REMOVAL AND INSTALLATION - (CONTINUED)

3. Connect rear door/ramp feed harness connector (Figure 3, Item 2) to PDM (Figure 3, Item 1).

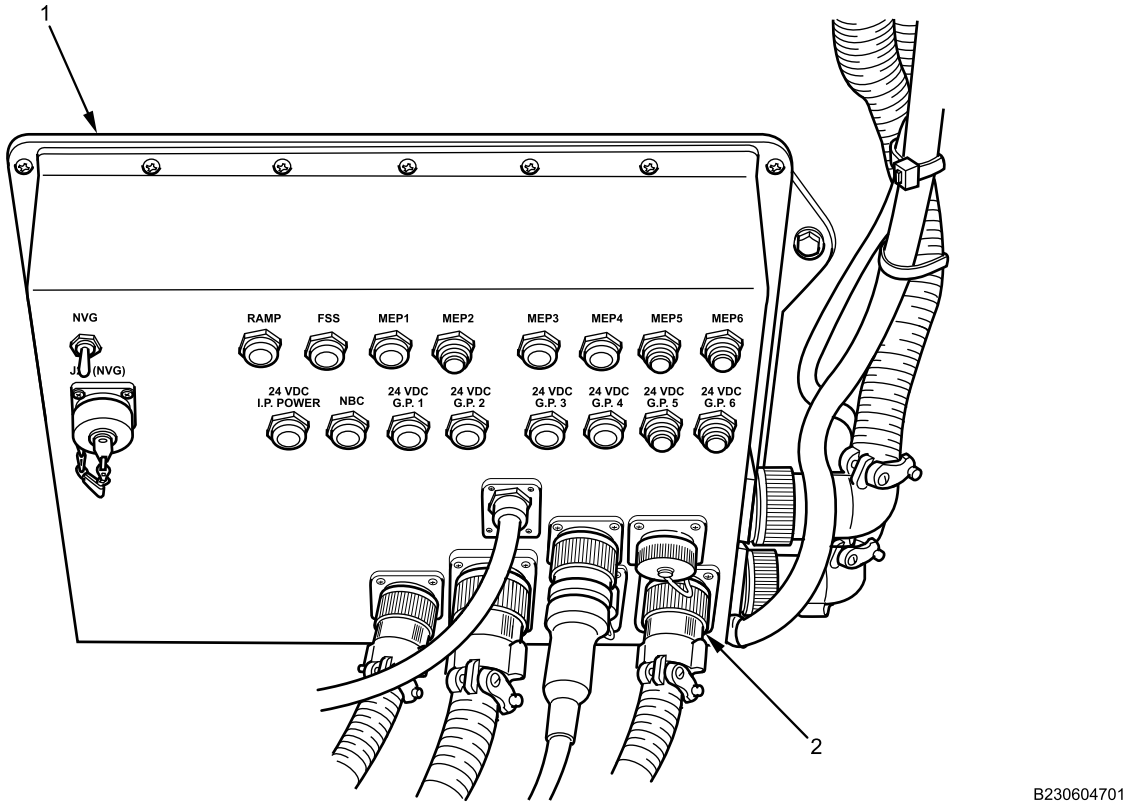

Figure 3. Rear Door/Ramp Feed Connector.

NOTE

To facilitate alignment of crossbar boltholes, loosen center mounting bracket bolts on floor.

4. Install electrical harness storage duct rear center cover (Figure 4, Item 8) with six bolts (Figure 4, Item 7). Tighten bolts securely.

REAR DOOR/RAMP FEED WIRING HARNESS REMOVAL AND INSTALLATION - (CONTINUED)

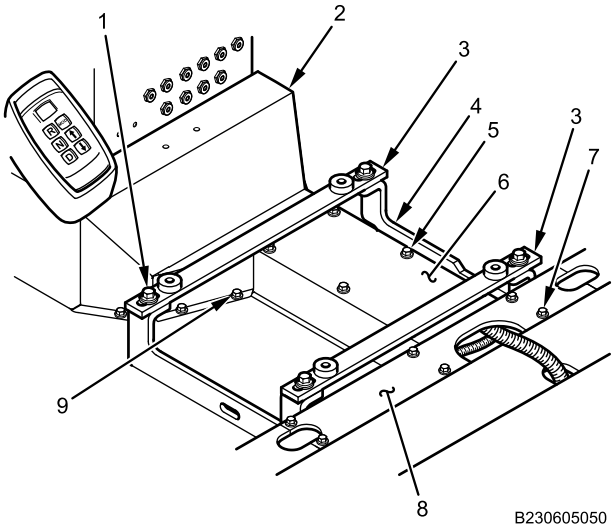

Figure 4. PDM Harness Electrical Storage Shield and Duct Covers.

5. Install electrical harness storage duct center cover (Figure 4, Item 6) with six bolts (Figure 4, Item 5). Tighten bolts securely.
6. Install two crossbars (Figure 4, Item 3) on center mounting brackets (Figure 4, Item 4) with four bolts (Figure 4, Item 1), lockwashers, and flat washers. Tighten bolts securely.
7. Install PDM harness electrical storage shield (Figure 4, Item 2) with eight bolts (Figure 4, Item 9). Tighten bolts securely.

END OF TASK

FOLLOW-ON MAINTENANCE

1. Verify rear door/ramp operation (TM 9-2355-106-10).
2. Install front center floor panel (WP 0659).
3. Install center floor panel (WP 0660).
4. Install rear center floor panel (WP 0661).
5. Install rear floor panel (WP 0662).
6. Remove wheel chocks (TM 9-2355-106-10).

END OF TASK

END OF WORK PACKAGE

FIELD MAINTENANCE

24V GOVERNMENT FURNISHED EQUIPMENT (GFE) HARNESS REMOVAL AND INSTALLATION

INITIAL SETUP:

Tools and Special Tools
General Mechanic's Tool Kit (GMTK) (WP 0795, Item 37)

Materials/Parts
Grease (WP 0794, Item 22)
Wire tags (WP 0794, Item 33)
Cable lock strap - (6) (WP 0796, Item 134)

References
TM 9-2355-106-10
TM 9-2355-106-23P
WP 0786
WP 0782

Equipment Condition
Parking brake set (TM 9-2355-106-10)
Transmission set in NEUTRAL (N) (TM 9-2355-106-10)
Engine off (TM 9-2355-106-10)
MAIN POWER switch off (TM 9-2355-106-10)
Wheels chocked (TM 9-2355-106-10)
Right cabin door secured safely open (WP 0608)

WARNING

Use extreme caution when testing or working on or around electrical circuits. Always assume that electrical circuits are live. Electrical shock can occur upon contact with voltage high enough to cause current flow through muscles or nerves. On Direct Current (DC) systems, generally 1 milliamp of current can be felt, 5 milliamps can cause severe pain, 15 milliamps can cause loss of muscle control, and 70 milliamps can be fatal. Wear protective clothing; ensure skin, clothing, and surrounding areas are dry; do not wear jewelry; and touch only the insulated, nonmetallic parts of electrical components and testing equipment. To prevent electrical arcing, avoid shorting electrical test probes and jumper wires. Electrical arcing can cause bright flashes of light, capable of causing temporary blindness. If electrical injury occurs, immediately shut off power supply and seek medical assistance. Failure to comply may result in serious injury or death to personnel.

Cab door must be secured in the open position by using heavy duty winch straps to prevent accidental closure during vehicle maintenance. Pull door hinge pin prior to securing door open. Failure to comply may result in serious injury or death to personnel.

Use the appropriate lifting strap sling or chain hoist for the type of load. Always clean and inspect lifting strap slings and chain hoists prior to use. Inspect for damage such as wear, corrosion, elongation, tears, or punctures. Replace lifting strap slings or chain hoists that are damaged. Failure to comply may result in component damage and death or injury to personnel.

NOTE

Label harnesses and note location of cable lock straps before removal to aid installation.

24V GOVERNMENT FURNISHED EQUIPMENT (GFE) HARNESS REMOVAL AND INSTALLATION - (CONTINUED)

REMOVAL

1. Remove eight bolts (Figure 1, Item 9), and PDM harness electrical storage shield (Figure 1, Item 2).

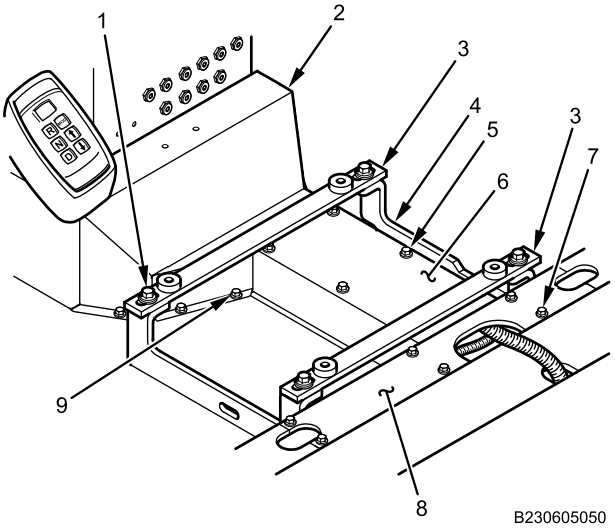

Figure 1. Power Distribution Module (PDM) Harness Electrical Storage Shield and Duct Covers.

2. Remove four bolts (Figure 1, Item 1), lockwashers, flat washers, and remove two crossbars (Figure 1, Item 3) mounted to center mounting brackets (Figure 1, Item 4).
3. Remove six bolts (Figure 1, Item 5) and electrical harness storage duct center cover (Figure 1, Item 6).
4. Remove six bolts (Figure 1, Item 7) and electrical harness storage duct rear center cover (Figure 1, Item 8).
5. Disconnect 24V GFE wiring harness connector (Figure 2, Item 2) from PDM (Figure 2, Item 1).

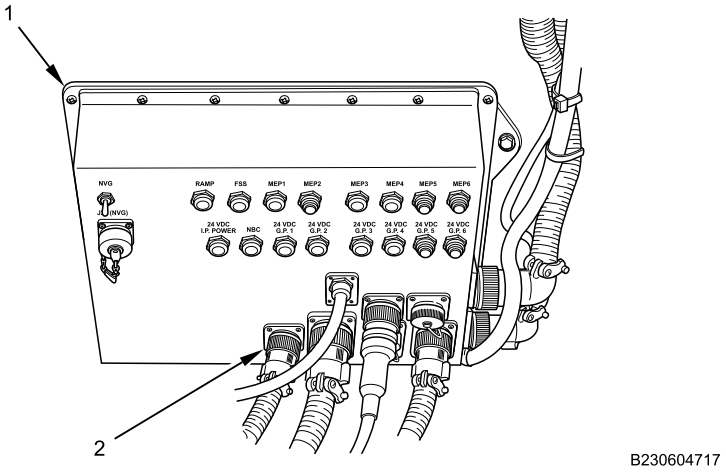

Figure 2. 24V GFE Wiring Harness Connector.

24V GOVERNMENT FURNISHED EQUIPMENT (GFE) HARNESS REMOVAL AND INSTALLATION - (CONTINUED)

6. Loosen four screws (Figure 3, Item 2) and remove GFE terminal box cover (Figure 3, Item 3) from GFE terminal box (Figure 3, Item 1).

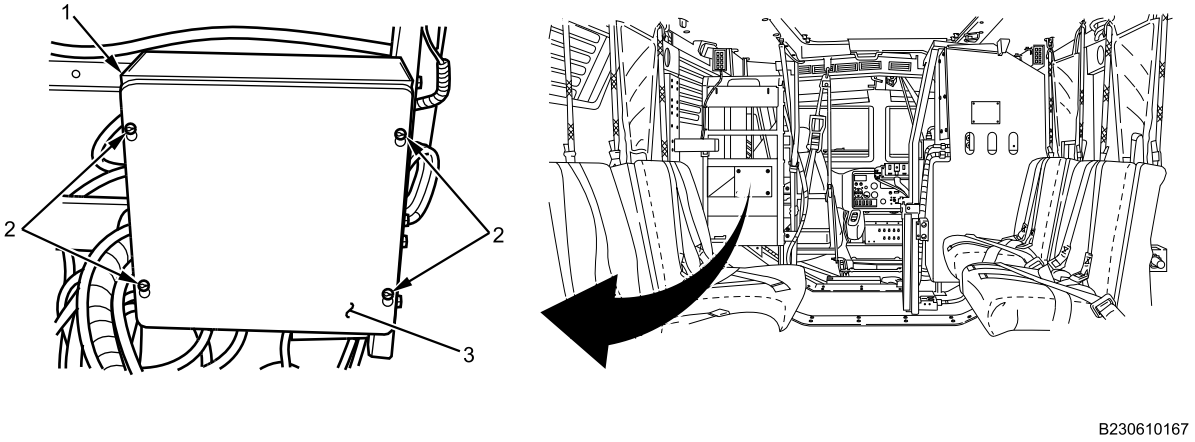

Figure 3. GFE Terminal Box Cover.

CAUTION

Identify, note location, and label GFE harness wires with wire tags before removing to aid in installation. Failure to comply may result in damage to electrical system.

7. Remove two nuts (Figure 4, Item 2 and 3) securing GFE wiring harness cables (Figure 4, Item 1 and 4).

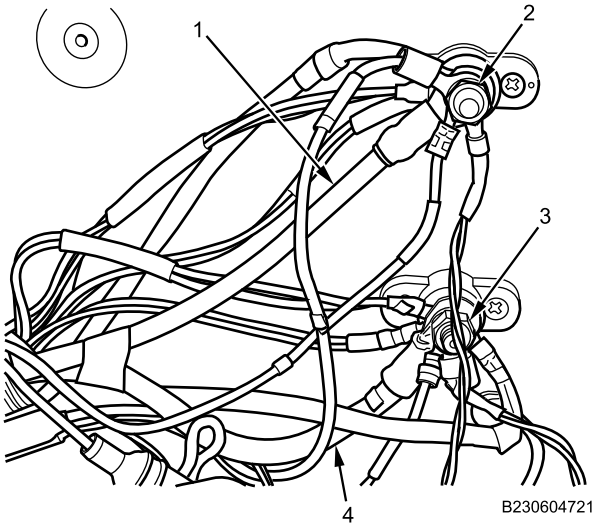

Figure 4. GFE Wiring Harness Connections.

8. Remove and discard cable lock straps and remove 24V GFE wiring harness.

END OF TASK

24V GOVERNMENT FURNISHED EQUIPMENT (GFE) HARNESS REMOVAL AND INSTALLATION - (CONTINUED)

INSTALLATION

WARNING

Dielectric grease is harmful to skin and eyes. If grease contacts eyes, rinse thoroughly and contact physician if irritation persists. If skin is contacted, wash thoroughly with soap and water. Failure to comply may result in serious injury to personnel.

CAUTION

Install 24V GFE wiring harness wires according to wire tag labeling. Failure to comply may result in damage to electrical system.

NOTE

Apply dielectric grease to all 24V GFE wiring harness connections.

1. Position 24V GFE wiring harness in vehicle as labeled during removal. Install two nuts (Figure 5, Item 2 and 3) to secure GFE wiring harness cables (Figure 5, Item 1 and 4).

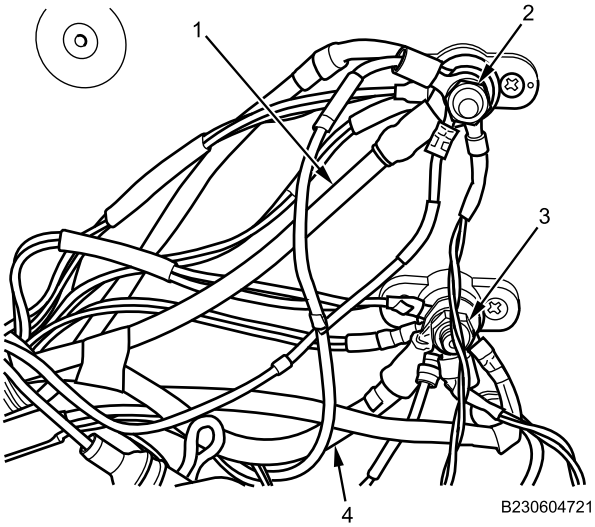

Figure 5. GFE Wiring Harness Connections.

24V GOVERNMENT FURNISHED EQUIPMENT (GFE) HARNESS REMOVAL AND INSTALLATION - (CONTINUED)

2. Install GFE terminal box cover (Figure 6, Item 3) on GFE terminal box (Figure 6, Item 1).

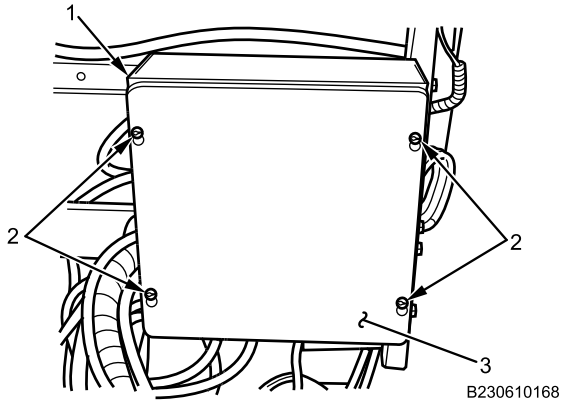

Figure 6. GFE Terminal Box Cover.

3. Tighten four screws (Figure 6, Item 2) securely.
4. Connect 24V GFE wiring harness connector (Figure 7, Item 2) to PDM (Figure 7, Item 1).

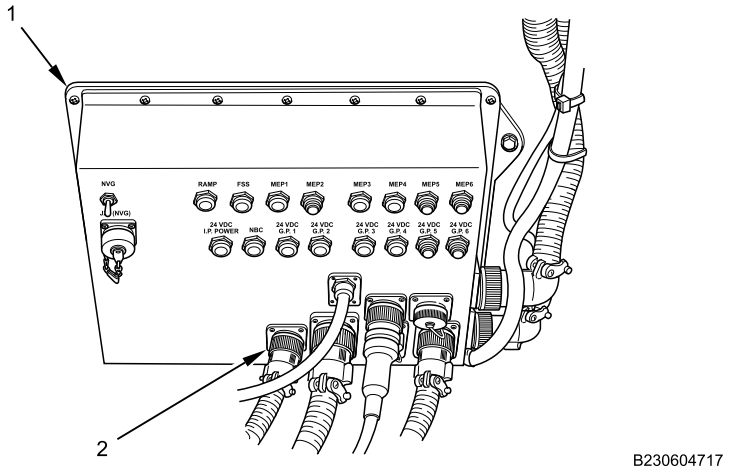

Figure 7. 24V GFE Wiring Harness Connector.

5. Install all cable lock straps and tighten securely.

24V GOVERNMENT FURNISHED EQUIPMENT (GFE) HARNESS REMOVAL AND INSTALLATION - (CONTINUED)

NOTE

To facilitate alignment of crossbar boltholes, loosen center mounting bracket bolts on floor.

6. Install electrical harness storage duct rear center cover (Figure 8, Item 8) with six bolts (Figure 8, Item 7). Tighten bolts securely.

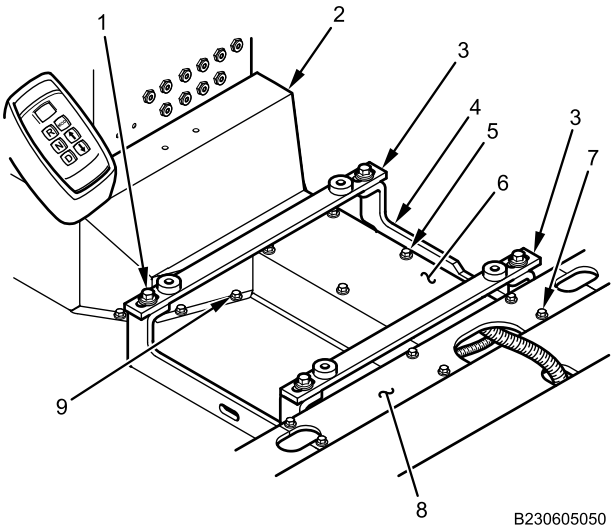

Figure 8. Power Distribution Module (PDM) Harness Electrical Storage Shield and Duct Covers.

7. Install electrical harness storage duct center cover (Figure 8, Item 6) with six bolts (Figure 8, Item 5). Tighten bolts securely.
8. Install two crossbars (Figure 8, Item 3) to center mounting brackets (Figure 8, Item 4) with four bolts (Figure 8, Item 1), lockwashers, and flat washers. Tighten bolts securely.
9. Install PDM harness electrical storage shield (Figure 8, Item 2) with eight bolts (Figure 8, Item 9). Tighten bolts securely.

END OF TASK

FOLLOW-ON MAINTENANCE

1. Remove chain hoist and lifting strap from right cabin door, and close right cabin door (WP 0608).
2. Close and secure right door (TM 9-2355-106-10).
3. Remove wheel chocks (TM 9-2355-106-10).

END OF TASK

END OF WORK PACKAGE

FIELD MAINTENANCE

TURRET POWER FEED HARNESS REMOVAL AND INSTALLATION

INITIAL SETUP:

Tools and Special Tools
General Mechanic's Tool Kit (GMTK) (WP 0795, Item 37)

Materials/Parts
Grease (WP 0794, Item 22)
Wire tags (WP 0794, Item 33)
Cable lock strap - (6) (WP 0796, Item 134)

References
TM 9-2355-106-10
TM 9-2355-106-23P
WP 0782

Equipment Condition
Parking brake set (TM 9-2355-106-10)
Transmission set in NEUTRAL (N) (TM 9-2355-106-10)
Engine off (TM 9-2355-106-10)
MAIN POWER switch off (TM 9-2355-106-10)
Wheels chocked (TM 9-2355-106-10)

WARNING

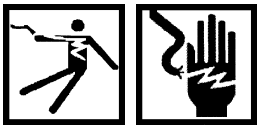

Use extreme caution when testing or working on or around electrical circuits. Always assume that electrical circuits are live. Electrical shock can occur upon contact with voltage high enough to cause current flow through muscles or nerves. On Direct Current (DC) systems, generally 1 milliamp of current can be felt, 5 milliamps can cause severe pain, 15 milliamps can cause loss of muscle control, and 70 milliamps can be fatal. Wear protective clothing; ensure skin, clothing, and surrounding areas are dry; do not wear jewelry; and touch only the insulated, nonmetallic parts of electrical components and testing equipment. To prevent electrical arcing, avoid shorting electrical test probes and jumper wires. Electrical arcing can cause bright flashes of light, capable of causing temporary blindness. If electrical injury occurs, immediately shut off power supply and seek medical assistance. Failure to comply may result in serious injury or death to personnel.

NOTE

Record location and routing of harness and cable lock straps before removing to aid in installation.

TURRET POWER FEED HARNESS REMOVAL AND INSTALLATION - (CONTINUED)

REMOVAL

1. Remove eight bolts (Figure 1, Item 9) and PDM harness electrical storage shield (Figure 1, Item 2).

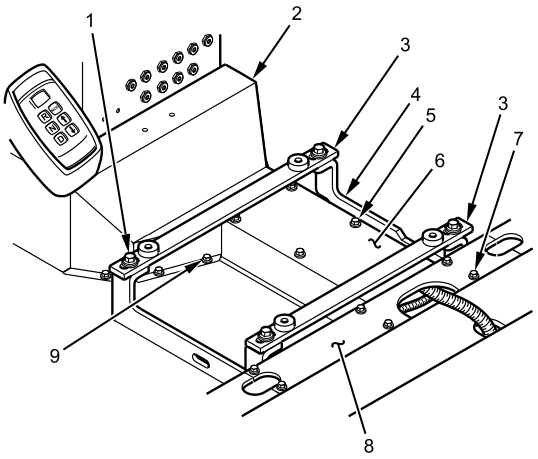

Figure 1. Power Distribution Module (PDM) Harness Electrical Storage Shield and Duct Covers.

2. Remove four bolts (Figure 1, Item 1), lockwashers, and flat washers, and two crossbars (Figure 1, Item 3) mounted to center mounting brackets (Figure 1, Item 4).
3. Remove six bolts (Figure 1, Item 5) and electrical harness storage duct center cover (Figure 1, Item 6).
4. Remove six bolts (Figure 1, Item 7) and electrical harness storage duct rear center cover (Figure 1, Item 8).
5. Disconnect turret power feed wiring harness connector (Figure 2, Item 2) from PDM (Figure 2, Item 1).

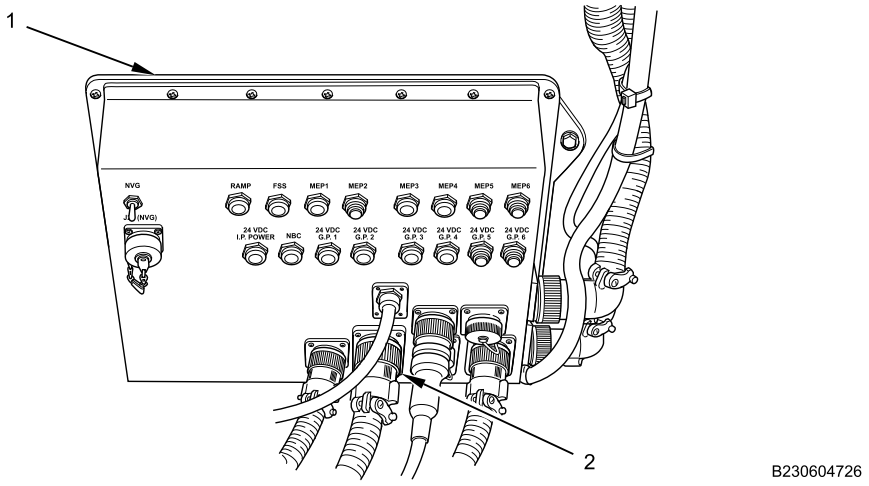

Figure 2. Turret Power Feed Wiring Harness Connector.

TURRET POWER FEED HARNESS REMOVAL AND INSTALLATION - (CONTINUED)

6. Loosen two screws (Figure 3, Item 2) and remove turret power feed box cover (Figure 3, Item 3) from turret power feed box (Figure 3, Item 1).

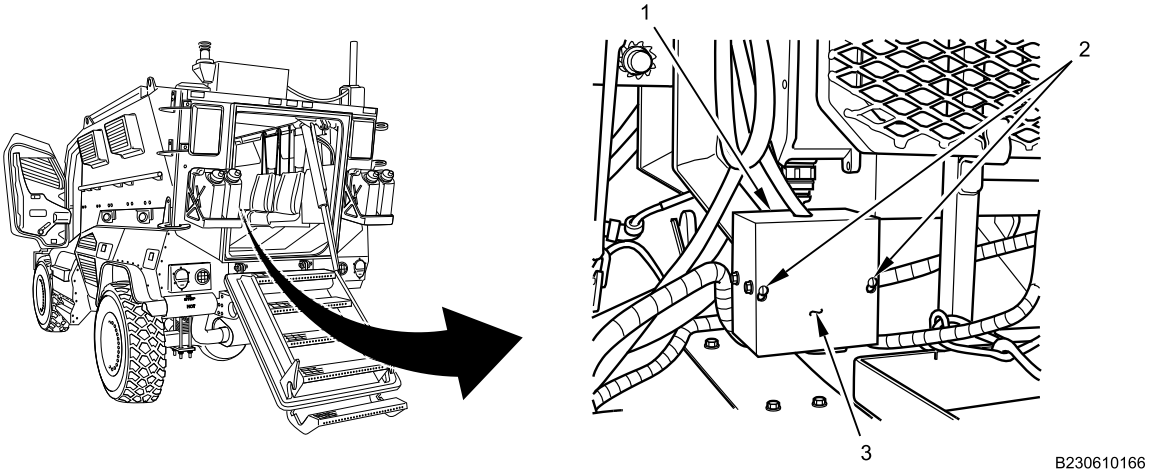

Figure 3. Turret Power Feed Box Cover.

7. Remove and discard cable lock straps.

CAUTION

Label turret power feed wiring harness cables with wire tags before removing to aid installation. Failure to comply may result in damage to electrical system.

8. Remove two nuts (Figure 4, Item 1 and 2) and turret power feed wiring harness cables (Figure 4, Item 3 and 4) from turret power feed box (Figure 4, Item 5).

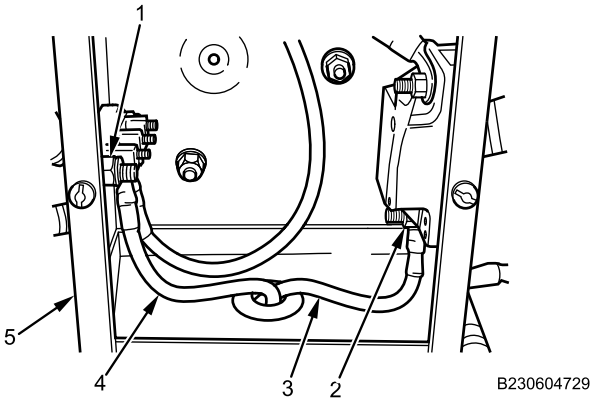

Figure 4. Turret Power Feed Wiring Harness Cables.

END OF TASK

TURRET POWER FEED HARNESS REMOVAL AND INSTALLATION - (CONTINUED)

INSTALLATION

WARNING

Dielectric grease is harmful to skin and eyes. If grease contacts eyes, rinse thoroughly and contact physician if irritation persists. If skin is contacted, wash thoroughly with soap and water. Failure to comply may result in serious injury to personnel.

NOTE

Apply dielectric grease to all turret power feed wiring harness connections before installation.

1. Install turret power feed wiring harness cables (Figure 5, Item 3 and 4) in turret power feed box (Figure 5, Item 5) with two nuts (Figure 5, Item 1 and 2) as noted on wire tags. Tighten nuts securely.

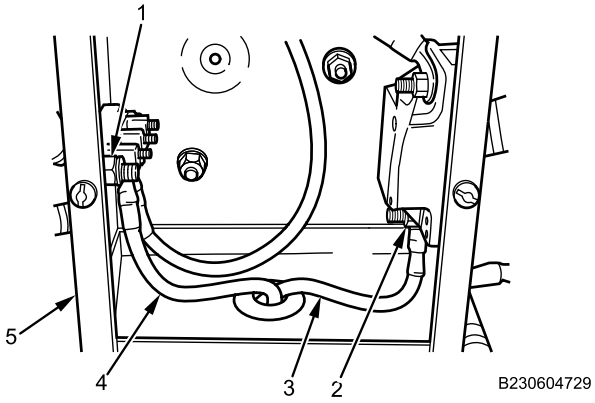

Figure 5. Turret Power Feed Harness Connections.

TURRET POWER FEED HARNESS REMOVAL AND INSTALLATION - (CONTINUED)

2. Install turret power feed box cover (Figure 6, Item 3) on turret power feed box (Figure 6, Item 1) with two screws (Figure 6, Item 2). Tighten screws securely.

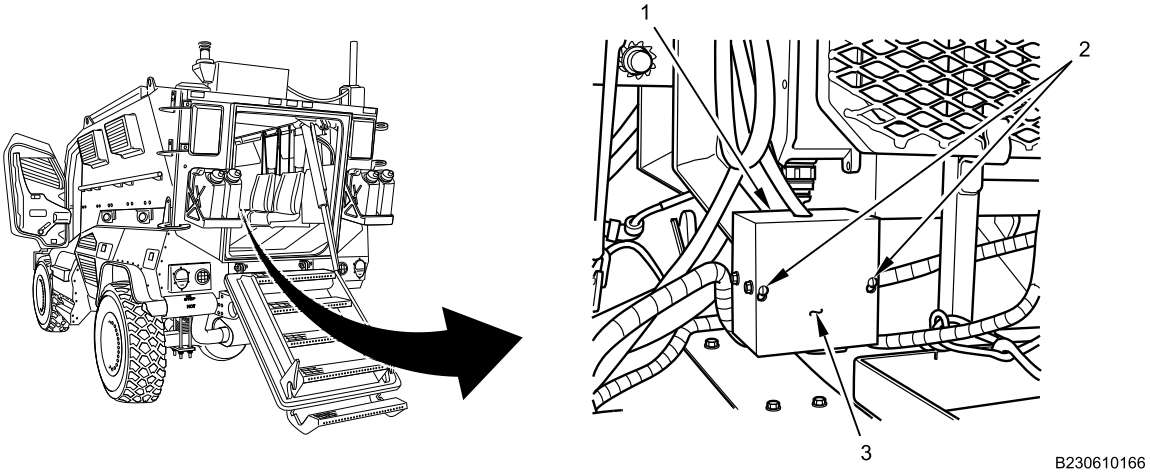

Figure 6. Turret Power Feed Box Cover.

3. Install turret power feed wiring harness and new cable lock straps as noted in removal.
4. Connect turret power feed wiring harness connector (Figure 7, Item 2) to PDM (Figure 7, Item 1).

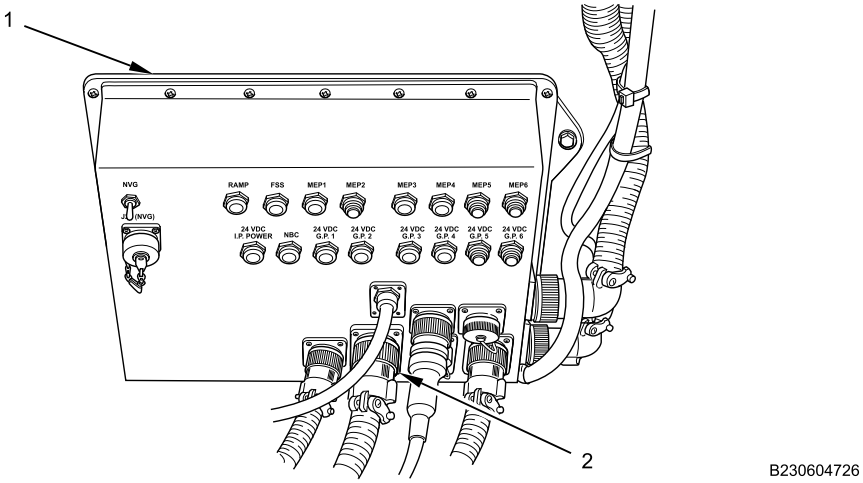

Figure 7. Turret Power Feed Wiring Harness Connector.

TURRET POWER FEED HARNESS REMOVAL AND INSTALLATION - (CONTINUED)

NOTE

To facilitate alignment of crossbar boltholes, loosen center mounting bracket bolts on floor.

5. Install electrical harness storage duct rear center cover (Figure 8, Item 8) with six bolts (Figure 8, Item 7). Tighten bolts securely.

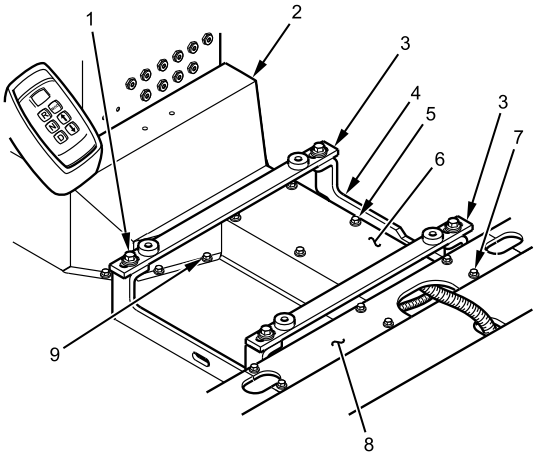

Figure 8. PDM Harness Electrical Storage Shield and Duct Covers.

6. Install electrical harness storage duct center cover (Figure 8, Item 6) with six bolts (Figure 8, Item 5). Tighten bolts securely.
7. Install two crossbars (Figure 8, Item 3) on center mounting brackets (Figure 8, Item 4) with four bolts (Figure 8, Item 1), lockwashers, and flat washers. Tighten bolts securely.
8. Install PDM harness electrical storage shield (Figure 8, Item 2) with eight bolts (Figure 8, Item 9). Tighten bolts securely.

END OF TASK

FOLLOW-ON MAINTENANCE

1. Remove wheel chocks (TM 9-2355-106-10).

END OF TASK

END OF WORK PACKAGE

FIELD MAINTENANCE

110V INVERTER MAIN POWER SWITCH REMOVAL AND INSTALLATION

INITIAL SETUP:

Tools and Special Tools
General Mechanic's Tool Kit (GMTK) (WP 0795, Item 37)

Materials/Parts
Grease (WP 0794, Item 22)
Wire tags

References
TM 9-2355-106-10
TM 9-2355-106-23P
WP 0786
WP 0782

Equipment Condition
Parking brake set (TM 9-2355-106-10)
Transmission set in NEUTRAL (N) (TM 9-2355-106-10)
Engine off (TM 9-2355-106-10)
MAIN POWER switch off (TM 9-2355-106-10)
Wheels chocked (TM 9-2355-106-10)
Right air conditioning (A/C) condenser panel removed (WP 0672)

WARNING

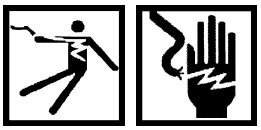

Use extreme caution when testing or working on or around electrical circuits. Always assume that electrical circuits are live. Electrical shock can occur upon contact with voltage high enough to cause current flow through muscles or nerves. On Direct Current (DC) systems, generally 1 milliamp of current can be felt, 5 milliamps can cause severe pain, 15 milliamps can cause loss of muscle control, and 70 milliamps can be fatal. Wear protective clothing; ensure skin, clothing, and surrounding areas are dry; do not wear jewelry; and touch only the insulated, nonmetallic parts of electrical components and testing equipment. To prevent electrical arcing, avoid shorting electrical test probes and jumper wires. Electrical arcing can cause bright flashes of light, capable of causing temporary blindness. If electrical injury occurs, immediately shut off power supply and seek medical assistance. Failure to comply may result in serious injury or death to personnel.

NOTE

Label all wires before removal to aid installation.

110V INVERTER MAIN POWER SWITCH REMOVAL AND INSTALLATION - (CONTINUED)

REMOVAL

1. Remove two nuts (Figure 1, Item 1 and 4) securing positive cables to 110V inverter MAIN POWER switch (Figure 1, Item 3).

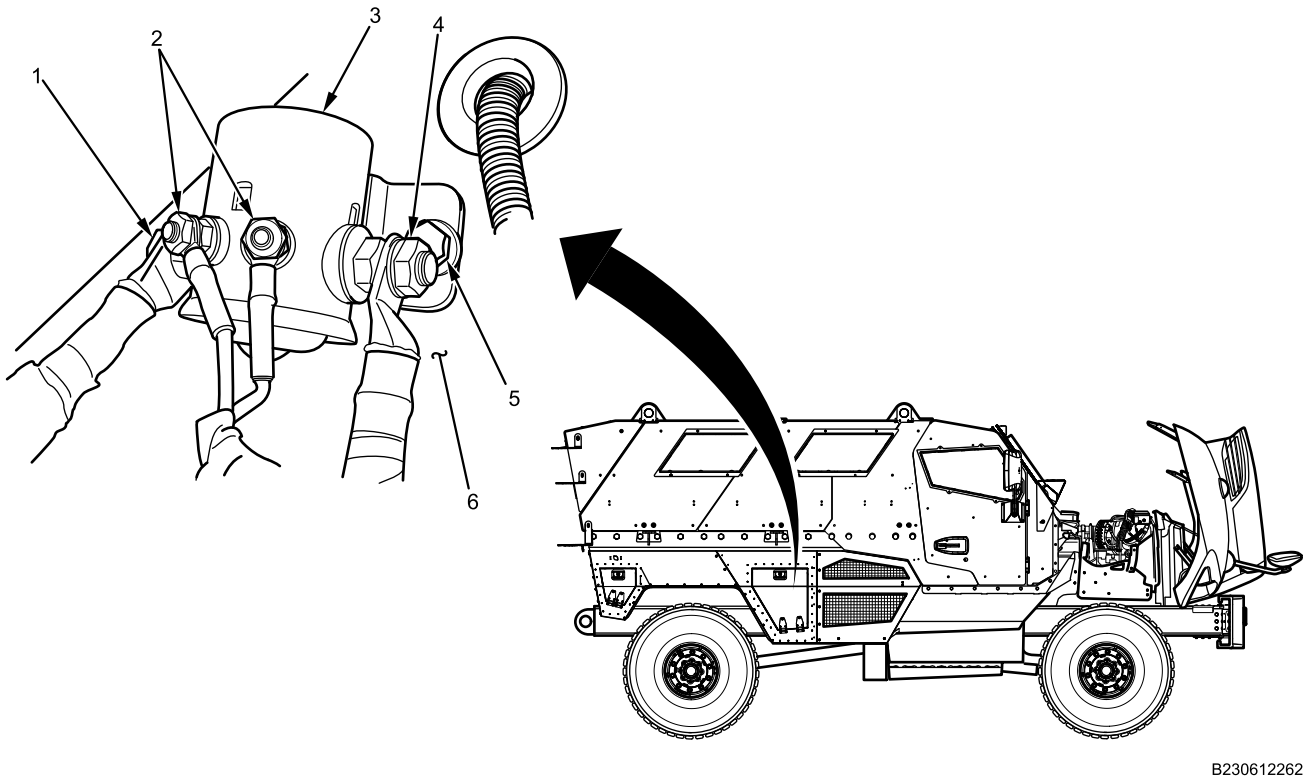

Figure 1. 110V Inverter MAIN POWER Switch Wiring.

2. Remove two nuts (Figure 1, Item 2) securing switch control wires to switch (Figure 1, Item 3).
3. Remove two nuts and bolts (Figure 1, Item 5) securing switch (Figure 1, Item 3) to stowage box (Figure 1, Item 6) and remove switch.

END OF TASK

110V INVERTER MAIN POWER SWITCH REMOVAL AND INSTALLATION - (CONTINUED)

INSTALLATION

WARNING

Dielectric grease is harmful to skin and eyes. If grease contacts eyes, rinse thoroughly and contact physician if irritation persists. If skin is contacted, wash thoroughly with soap and water. Failure to comply may result in serious injury to personnel.

NOTE

Apply dielectric grease to all electrical connections.

1. Position 110V inverter MAIN POWER switch (Figure 2, Item 3) to stowage box (Figure 2, Item 6).

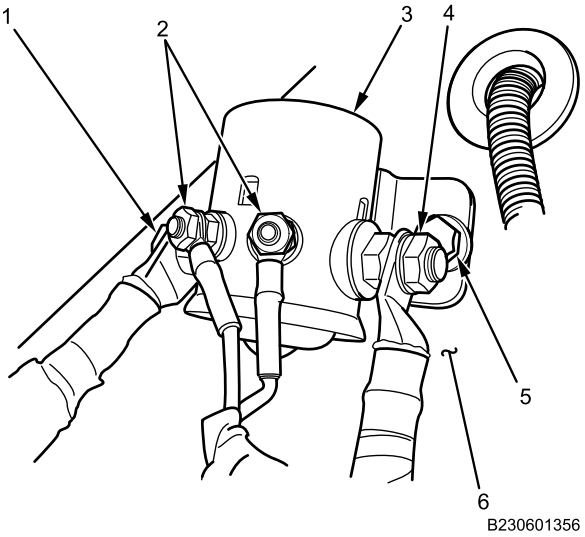

Figure 2. 110V Inverter MAIN POWER Switch Installation.

2. Install two nuts and bolts (Figure 2, Item 5) and tighten securely.
3. Install two nuts (Figure 2, Item 2) securing switch control wires to switch (Figure 2, Item 3). Tighten nuts securely.
4. Install two nuts (Figure 2, Item 1 and 4) securing positive cables to switch (Figure 2, Item 3). Tighten nuts securely.

END OF TASK

110V INVERTER MAIN POWER SWITCH REMOVAL AND INSTALLATION - (CONTINUED)

FOLLOW-ON MAINTENANCE

1. Install right air conditioning (A/C) condenser panel (WP 0672).
2. Turn MAIN POWER switch on (TM 9-2355-106-10).
3. Verify 110V inverter operation (TM 9-2355-106-10).
4. Turn MAIN POWER switch off (TM 9-2355-106-10).
5. Remove wheel chocks (TM 9-2355-106-10).

END OF TASK

END OF WORK PACKAGE

FIELD MAINTENANCE

WINCH MEGAFUSE AND HOLDER REMOVAL AND INSTALLATION

INITIAL SETUP:

Tools and Special Tools
General Mechanic's Tool Kit (GMTK) (WP 0795, Item 37)

Materials/Parts
Grease (WP 0794, Item 22)
Wire tags (WP 0794, Item 33)
Lockwasher - (2) (WP 0796, Item 185)

References
TM 9-2355-106-10
TM 9-2355-106-23P
WP 0786
WP 0782

Equipment Condition
Parking brake set (TM 9-2355-106-10)
Transmission set in NEUTRAL (N) (TM 9-2355-106-10)
Engine off (TM 9-2355-106-10)
MAIN POWER switch off (TM 9-2355-106-10)
Wheels chocked (TM 9-2355-106-10)
Battery cables disconnected (WP 0404)

WARNING

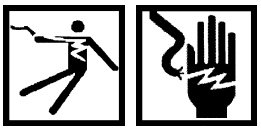

Use extreme caution when testing or working on or around electrical circuits. Always assume that electrical circuits are live. Electrical shock can occur upon contact with voltage high enough to cause current flow through muscles or nerves. On Direct Current (DC) systems, generally 1 milliamp of current can be felt, 5 milliamps can cause severe pain, 15 milliamps can cause loss of muscle control, and 70 milliamps can be fatal. Wear protective clothing; ensure skin, clothing, and surrounding areas are dry; do not wear jewelry; and touch only the insulated, nonmetallic parts of electrical components and testing equipment. To prevent electrical arcing, avoid shorting electrical test probes and jumper wires. Electrical arcing can cause bright flashes of light, capable of causing temporary blindness. If electrical injury occurs, immediately shut off power supply and seek medical assistance. Failure to comply may result in serious injury or death to personnel.

NOTE

Winch megafuse and holder are located on bracket behind batteries, next to 12V and 24V battery disconnect solenoid switches.

Label all wires before removal to facilitate installation.

WINCH MEGAFUSE AND HOLDER REMOVAL AND INSTALLATION - (CONTINUED)

REMOVAL

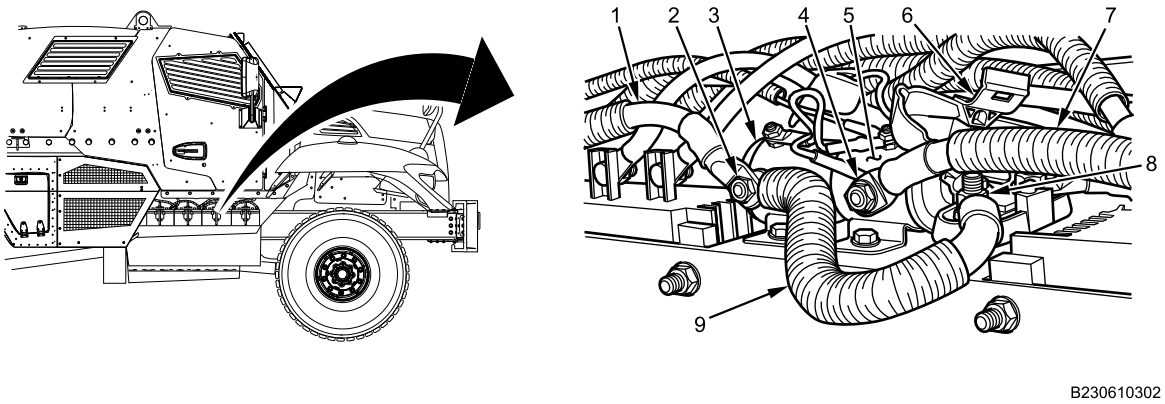

Figure 1. Megafuse Feed Cable.

1. Remove nut (Figure 1, Item 2), positive battery cable (Figure 1, Item 1), and megafuse feed cable (Figure 1, Item 9) from 24V battery disconnect solenoid switch (Figure 1, Item 3).
2. Remove nut (Figure 1, Item 4) and positive battery cable (Figure 1, Item 7) from 12V battery disconnect solenoid switch (Figure 1, Item 5).
3. Remove megafuse cover (Figure 1, Item 6) from megafuse holder.
4. Remove nut (Figure 1, Item 8) and megafuse feed cable (Figure 1, Item 9) from megafuse holder.

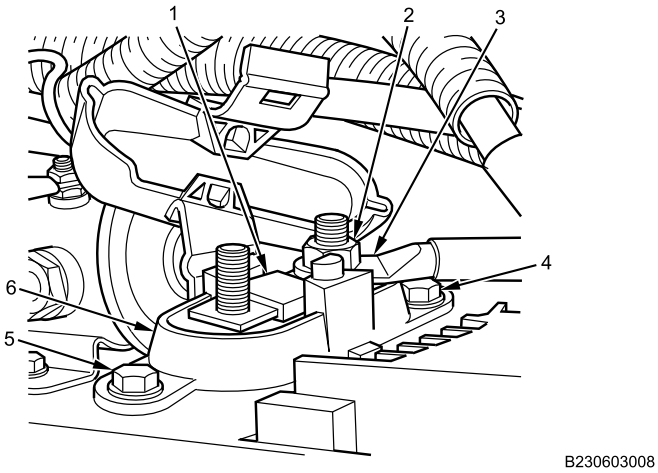

Figure 2. 300A Megafuse and Holder.

5. Remove nut (Figure 2, Item 2) and winch feed cable (Figure 2, Item 3) from megafuse holder (Figure 2, Item 6).
6. Remove 300A megafuse (Figure 2, Item 1) from megafuse holder (Figure 2, Item 6).
7. Remove bolts (Figure 2, Item 4 and 5), lockwashers, and flatwashers from megafuse holder (Figure 2, Item 6). Discard lockwashers.
8. Remove megafuse holder (Figure 2, Item 6) from bracket.

END OF TASK

WINCH MEGAFUSE AND HOLDER REMOVAL AND INSTALLATION - (CONTINUED)

TEST AND INSPECTION

NOTE

Multimeter will read OL for a faulty fuse.

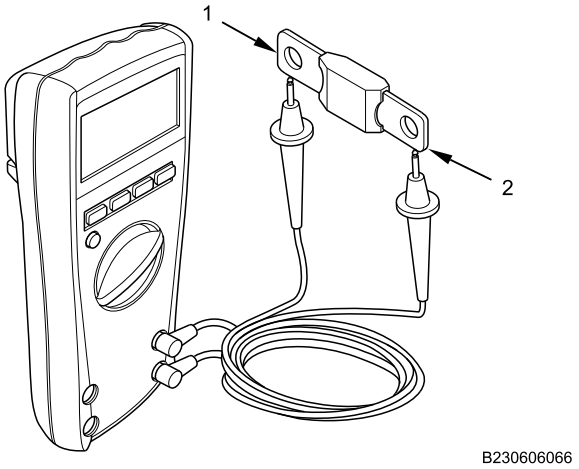

Figure 3. Testing for Faulty Fuse.

1. With fuse removed, measure resistance between both terminals (Figure 3, Item 1 and 2) of fuse with multimeter.

END OF TASK

WINCH MEGAFUSE AND HOLDER REMOVAL AND INSTALLATION - (CONTINUED)

INSTALLATION

WARNING

Dielectric grease is harmful to skin and eyes. If grease contacts eyes, rinse thoroughly and contact physician if irritation persists. If skin is contacted, wash thoroughly with soap and water. Failure to comply may result in serious injury to personnel.

NOTE

Apply dielectric grease to all electrical connections.

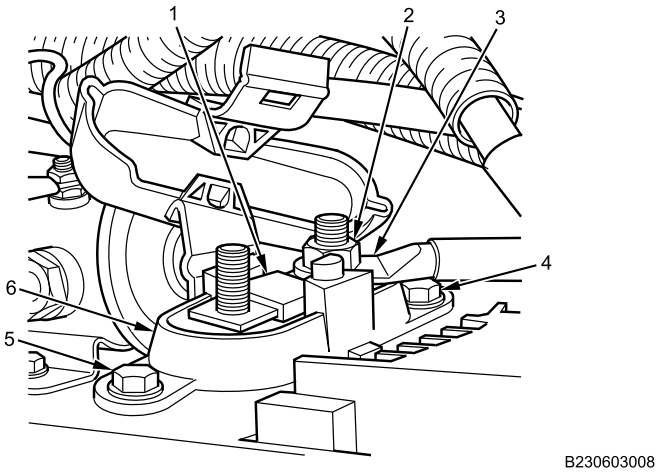

Figure 4. 300A Megafuse and Holder.

1. Position megafuse holder (Figure 4, Item 6) on bracket.
2. Install bolts (Figure 4, Item 4 and 5), new lockwashers, and flatwashers on megafuse holder (Figure 4, Item 6). Tighten bolts securely.

WARNING

Do not use a circuit breaker, fuse, or relay with higher amperage rating than listed for a particular application. Using higher amperage will overheat the electrical circuit, causing melted components and possible fire. Failure to comply may result in damage to equipment and serious injury or death to personnel.

3. Install 300A megafuse (Figure 4, Item 1) on megafuse holder (Figure 4, Item 6).
4. Install winch feed cable (Figure 4, Item 3) and nut (Figure 4, Item 2) on megafuse holder (Figure 4, Item 6). Tighten nut securely.

WINCH MEGAFUSE AND HOLDER REMOVAL AND INSTALLATION - (CONTINUED)

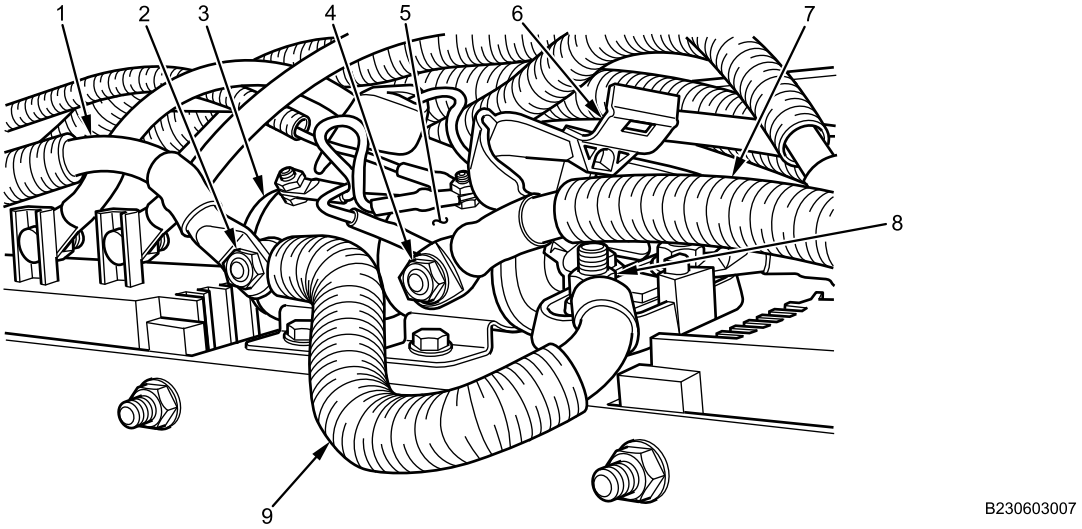

Figure 5. Megafuse Feed Cable.

5. Install megafuse feed cable (Figure 5, Item 9) and nut (Figure 5, Item 8) on megafuse holder. Tighten nut securely.
6. Install megafuse cover (Figure 5, Item 6) on megafuse holder.
7. Install positive battery cable (Figure 5, Item 7) and nut (Figure 5, Item 4) on 12V battery disconnect solenoid switch (Figure 5, Item 5). Tighten nut securely.
8. Install positive battery cable (Figure 5, Item 1), megafuse feed cable (Figure 5, Item 9), and nut (Figure 5, Item 2) on 24V battery disconnect solenoid switch (Figure 5, Item 3). Tighten nut securely.

END OF TASK

FOLLOW-ON MAINTENANCE

1. Connect battery cables (WP 0404).
2. Turn MAIN POWER switch on (TM 9-2355-106-10).
3. Verify winch system operation (TM 9-2355-106-10).
4. Turn MAIN POWERt switch off (TM 9-2355-106-10).
5. Remove wheel chocks (TM 9-2355-106-10).

END OF TASK

END OF WORK PACKAGE

FIELD MAINTENANCE

24V INVERTER MEGAFUSE AND HOLDER REMOVAL AND INSTALLATION

INITIAL SETUP:

Tools and Special Tools
General Mechanic's Tool Kit (GMTK) (WP 0795, Item 37)

Materials/Parts
Grease (WP 0794, Item 22)
Wire tags (WP 0794, Item 33)

References
TM 9-2355-106-10
TM 9-2355-106-23P
WP 0786
WP 0782

Equipment Condition
Parking brake set (TM 9-2355-106-10)
Transmission set in NEUTRAL (N) (TM 9-2355-106-10)
Engine off (TM 9-2355-106-10)
MAIN POWER switch off (TM 9-2355-106-10)
Wheels chocked (TM 9-2355-106-10)
Battery cables disconnected (WP 0404)
Air Conditioning (A/C) condenser panel removed (WP 0672)

WARNING

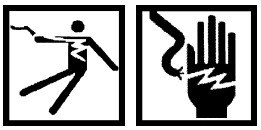

Use extreme caution when testing or working on or around electrical circuits. Always assume that electrical circuits are live. Electrical shock can occur upon contact with voltage high enough to cause current flow through muscles or nerves. On Direct Current (DC) systems, generally 1 milliamp of current can be felt, 5 milliamps can cause severe pain, 15 milliamps can cause loss of muscle control, and 70 milliamps can be fatal. Wear protective clothing; ensure skin, clothing, and surrounding areas are dry; do not wear jewelry; and touch only the insulated, nonmetallic parts of electrical components and testing equipment. To prevent electrical arcing, avoid shorting electrical test probes and jumper wires. Electrical arcing can cause bright flashes of light, capable of causing temporary blindness. If electrical injury occurs, immediately shut off power supply and seek medical assistance. Failure to comply may result in serious injury or death to personnel.

NOTE

Label all wires before removal.

24V INVERTER MEGAFUSE AND HOLDER REMOVAL AND INSTALLATION - (CONTINUED)

REMOVAL

1. Lift cable cover (Figure 1, Item 2) and remove nuts (Figure 1, Item 4) securing cables to 24V inverter megafuse holder (Figure 1, Item 3). Set cables aside and remove megafuse.

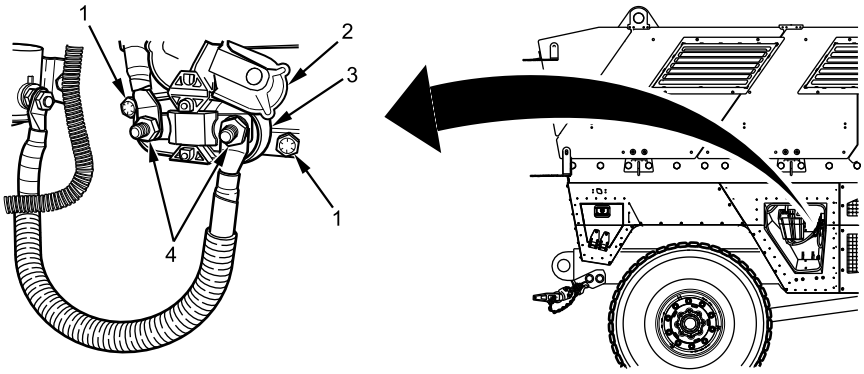

B230610301

Figure 1. 24V Inverter Megafuse Holder.

2. Remove two bolts (Figure 1, Item 1) securing megafuse holder (Figure 1, Item 3) to stowage bin.
3. Remove megafuse holder (Figure 1, Item 3).

END OF TASK

TEST AND INSPECTION

NOTE

Multimeter will read OL for a faulty fuse.

1. With fuse removed, measure resistance between both terminals (Figure 2, Item 1 and 2) of fuse with multimeter.

24V INVERTER MEGAFUSE AND HOLDER REMOVAL AND INSTALLATION - (CONTINUED)

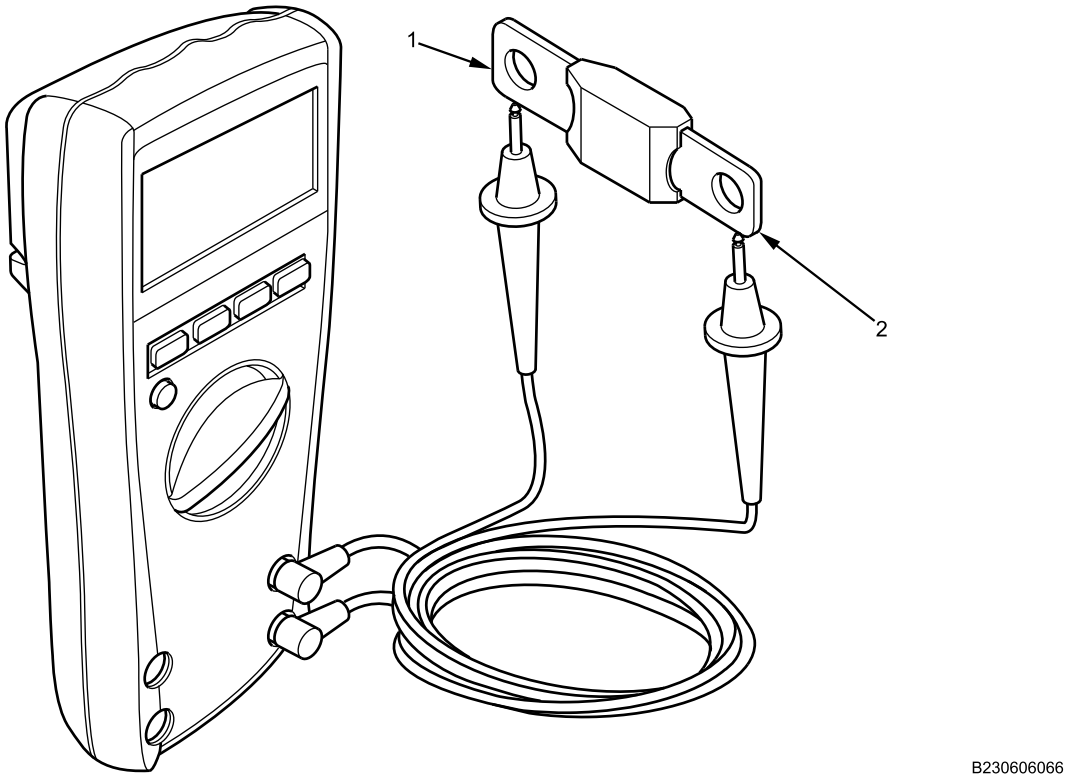

Figure 2. Testing for Faulty Fuse.

END OF TASK

24V INVERTER MEGAFUSE AND HOLDER REMOVAL AND INSTALLATION - (CONTINUED)

INSTALLATION

WARNING

Do not use a circuit breaker, fuse, or relay with higher amperage rating than listed for a particular application. Using higher amperage will overheat the electrical circuit, causing melted components and possible fire. Failure to comply may result in damage to equipment and serious injury or death to personnel.

Dielectric grease is harmful to skin and eyes. If grease contacts eyes, rinse thoroughly and contact physician if irritation persists. If skin is contacted, wash thoroughly with soap and water. Failure to comply may result in serious injury to personnel.

NOTE

Apply dielectric grease to all electrical connections.

Ensure cable cover is properly positioned to protect cables.

1. Position 24V inverter megafuse holder (Figure 3, Item 3) to body, and install two nuts and bolts (Figure 3, Item 1) to secure to stowage bin. Tighten nuts securely.

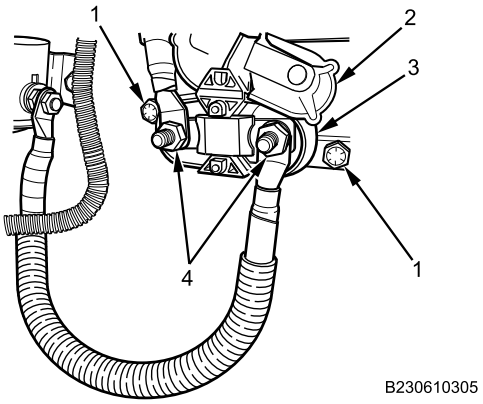

Figure 3. 24V Inverter Megafuse Holder.

2. Install megafuse in megafuse holder (Figure 3, Item 3) if removed.
3. Position cables to 24V inverter megafuse holder (Figure 3, Item 3), and install two nuts (Figure 3, Item 4). Tighten nuts securely.
4. Pull cover (Figure 3, Item 2) over inverter megafuse holder (Figure 3, Item 3).

END OF TASK

FOLLOW-ON MAINTENANCE

1. Install A/C condenser panel (WP 0672).
2. Connect negative battery cables (WP 0404).
3. Turn MAIN POWER switch on (TM 9-2355-106-10).

24V INVERTER MEGAFUSE AND HOLDER REMOVAL AND INSTALLATION - (CONTINUED)

4. Verify inverter operation (TM 9-2355-106-10).
5. Turn MAIN POWER switch off (TM 9-2355-106-10).
6. Remove wheel chocks (TM 9-2355-106-10).

END OF TASK

END OF WORK PACKAGE

FIELD MAINTENANCE

NATO JUMP START CONNECTOR CABLES REMOVAL AND INSTALLATION

INITIAL SETUP:

Tools and Special Tools
General Mechanic's Tool Kit (GMTK) (WP 0795, Item 37)

Materials/Parts
Grease (WP 0794, Item 22)
Wire tags (WP 0794, Item 33)
Cable lock straps - (6) (WP 0796, Item 124)

References
TM 9-2355-106-10
TM 9-2355-106-23P
WP 0786
WP 0782

Equipment Condition
Parking brake set (TM 9-2355-106-10)
Transmission set in NEUTRAL (N) (TM 9-2355-106-10)
Engine off (TM 9-2355-106-10)
MAIN POWER switch off (TM 9-2355-106-10)
Wheels chocked (TM 9-2355-106-10)
Air conditioning (A/C) condenser panel removed (WP 0672)
Battery box armor door removed (WP 0604)
Batteries disconnected (WP 0404)

WARNING

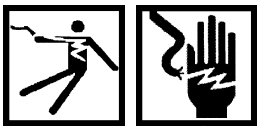

Use extreme caution when testing or working on or around electrical circuits. Always assume that electrical circuits are live. Electrical shock can occur upon contact with voltage high enough to cause current flow through muscles or nerves. On Direct Current (DC) systems, generally 1 milliamp of current can be felt, 5 milliamps can cause severe pain, 15 milliamps can cause loss of muscle control, and 70 milliamps can be fatal. Wear protective clothing; ensure skin, clothing, and surrounding areas are dry; do not wear jewelry; and touch only the insulated, nonmetallic parts of electrical components and testing equipment. To prevent electrical arcing, avoid shorting electrical test probes and jumper wires. Electrical arcing can cause bright flashes of light, capable of causing temporary blindness. If electrical injury occurs, immediately shut off power supply and seek medical assistance. Failure to comply may result in serious injury or death to personnel.

NOTE

Note size and number of cable lock straps to aid installation. Label all wires before removal.

NATO JUMP START CONNECTOR CABLES REMOVAL AND INSTALLATION - (CONTINUED)

REMOVAL

1. Remove nut (Figure 1, Item 2) and NATO jump start connector positive cable (Figure 1, Item 3) from third battery positive terminal (Figure 1, Item 1).

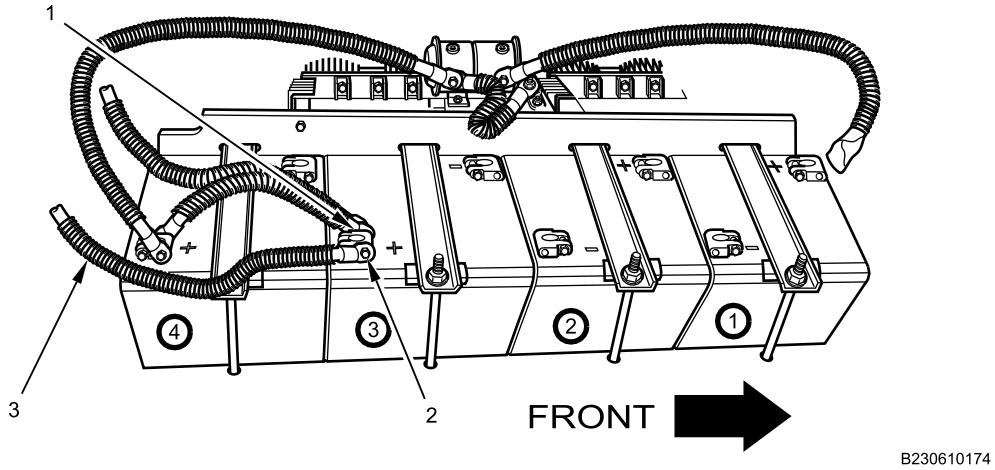

Figure 1. Battery Cable Connections.

2. Remove bolt (Figure 2, Item 1), 150-amp mega-fuse cable (Figure 2, Item 7), and positive battery post cable (Figure 2, Item 6) from positive side of NATO jump start connector (Figure 2, Item 2).

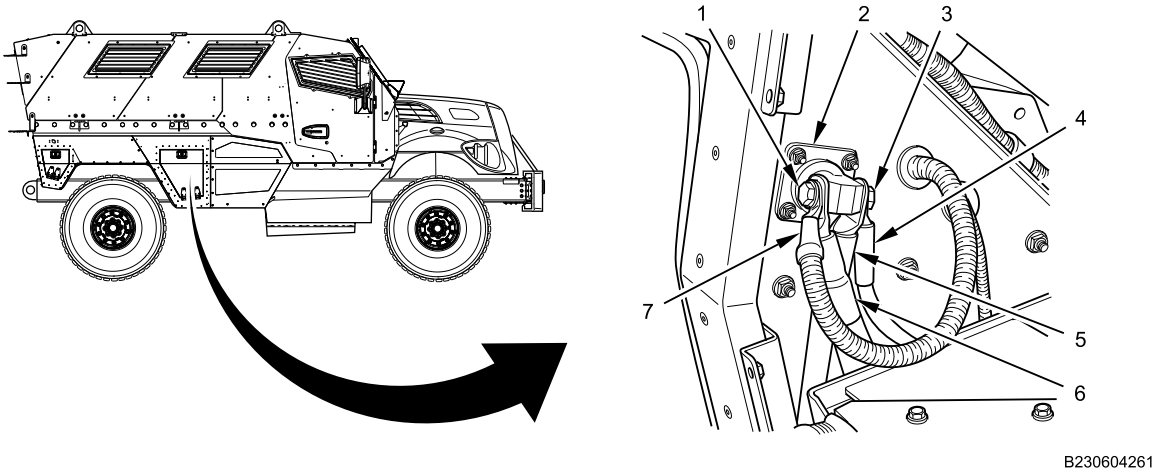

Figure 2. NATO Jump Start Connector Wiring.

3. Remove bolt (Figure 2, Item 3), 120-volt inverter cable (Figure 2, Item 4), and negative battery post cable (Figure 2, Item 5) from negative side of NATO jump start connector (Figure 2, Item 2).
4. Remove and discard cable lock straps retaining NATO jump start connector cables. Remove cables.

END OF TASK

NATO JUMP START CONNECTOR CABLES REMOVAL AND INSTALLATION - (CONTINUED)

INSTALLATION

WARNING

Dielectric grease is harmful to skin and eyes. If grease contacts eyes, rinse thoroughly and contact physician if irritation persists. If skin is contacted, wash thoroughly with soap and water. Failure to comply may result in serious injury to personnel.

NOTE

Apply dielectric grease to all connections.

1. Install negative battery post cable (Figure 3, Item 5) and 120-volt inverter cable (Figure 3, Item 4) on negative side of NATO jump start connector (Figure 3, Item 2) with bolt (Figure 3, Item 3). Tighten bolt securely.

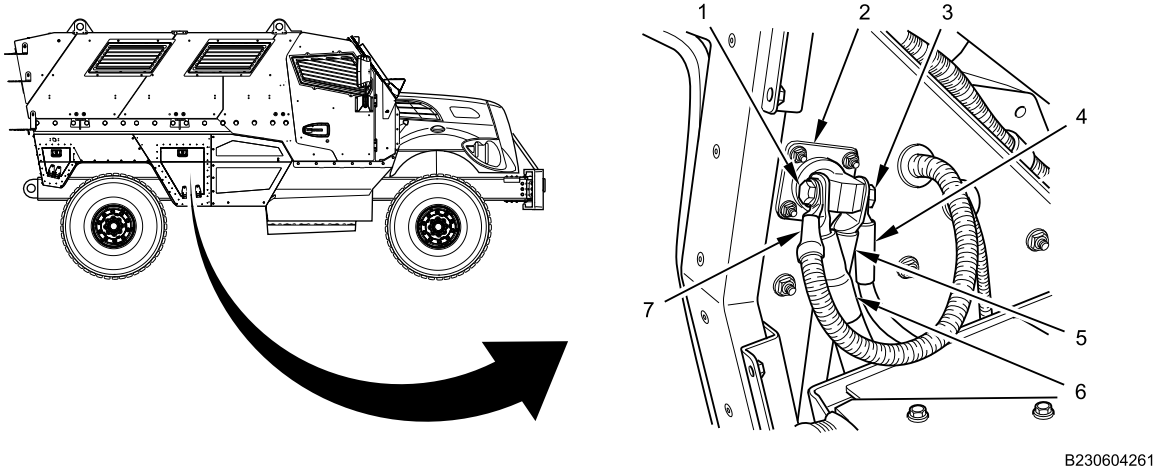

Figure 3. NATO Jump Start Connector Wiring.

2. Install positive battery post cable (Figure 3, Item 6) and 150-amp mega-fuse cable (Figure 3, Item 7) on positive side of NATO jump start connector (Figure 3, Item 2) with bolt (Figure 3, Item 1). Tighten bolt securely.

NATO JUMP START CONNECTOR CABLES REMOVAL AND INSTALLATION - (CONTINUED)

3. Install NATO jump start connector positive battery cable (Figure 4, Item 3) and nut (Figure 4, Item 2) to third battery positive terminal (Figure 4, Item 1). Tighten nut securely.

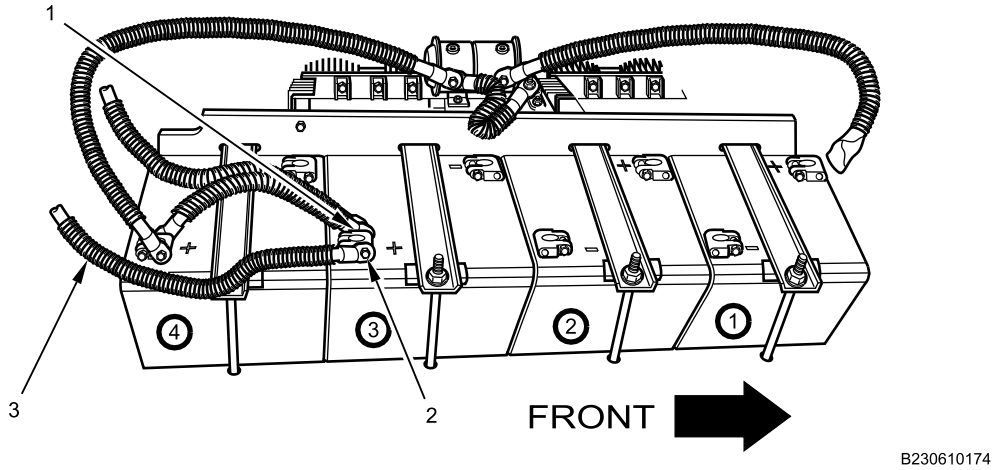

Figure 4. Battery Cable Connections.

4. Secure NATO jump start connector cables with new cable lock straps.

END OF TASK

FOLLOW-ON MAINTENANCE

1. Install air conditioning (A/C) condenser panel (WP 0672).
2. Connect batteries (WP 0404).
3. Install battery box armor door (WP 0604).
4. Turn MAIN POWER switch on (TM 9-2355-106-10).
5. Verify NATO connector operation (TM 9-2355-106-10).
6. Turn MAIN POWER switch off (TM 9-2355-106-10).
7. Remove wheel chocks (TM 9-2355-106-10).

END OF TASK

END OF WORK PACKAGE

FIELD MAINTENANCE

INVERTER AND MAIN POWER SWITCH SOLENOID CABLES REMOVAL AND INSTALLATION

INITIAL SETUP:

Tools and Special Tools
General Mechanic's Tool Kit (GMTK) (WP 0795, Item 37)

Materials/Parts
Grease (WP 0794, Item 22)
Wire tags (WP 0794, Item 33)
Lockwasher - (8) (WP 0796, Item 10)

References
TM 9-2355-106-10
TM 9-2355-106-23P
WP 0782

Equipment Condition
Parking brake set (TM 9-2355-106-10)
Transmission set in NEUTRAL (N) (TM 9-2355-106-10)
Engine off (TM 9-2355-106-10)
MAIN POWER switch off (TM 9-2355-106-10)
Wheels chocked (TM 9-2355-106-10)
Air conditioning (A/C) condenser panel removed (WP 0672)
Battery cables disconnected (WP 0404)

REMOVAL

WARNING

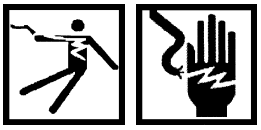

Use extreme caution when testing or working on or around electrical circuits. Always assume that electrical circuits are live. Electrical shock can occur upon contact with voltage high enough to cause current flow through muscles or nerves. On Direct Current (DC) systems, generally 1 milliamp of current can be felt, 5 milliamps can cause severe pain, 15 milliamps can cause loss of muscle control, and 70 milliamps can be fatal. Wear protective clothing; ensure skin, clothing, and surrounding areas are dry; do not wear jewelry; and touch only the insulated, nonmetallic parts of electrical components and testing equipment. To prevent electrical arcing, avoid shorting electrical test probes and jumper wires. Electrical arcing can cause bright flashes of light, capable of causing temporary blindness. If electrical injury occurs, immediately shut off power supply and seek medical assistance. Failure to comply may result in serious injury or death to personnel.

INVERTER AND MAIN POWER SWITCH SOLENOID CABLES REMOVAL AND INSTALLATION - (CONTINUED)

NOTE

Label all wires before removal to facilitate installation.

1. Remove two screws (Figure 1, Item 1) securing cover (Figure 1, Item 2) to inverter (Figure 1, Item 3). Remove cover.

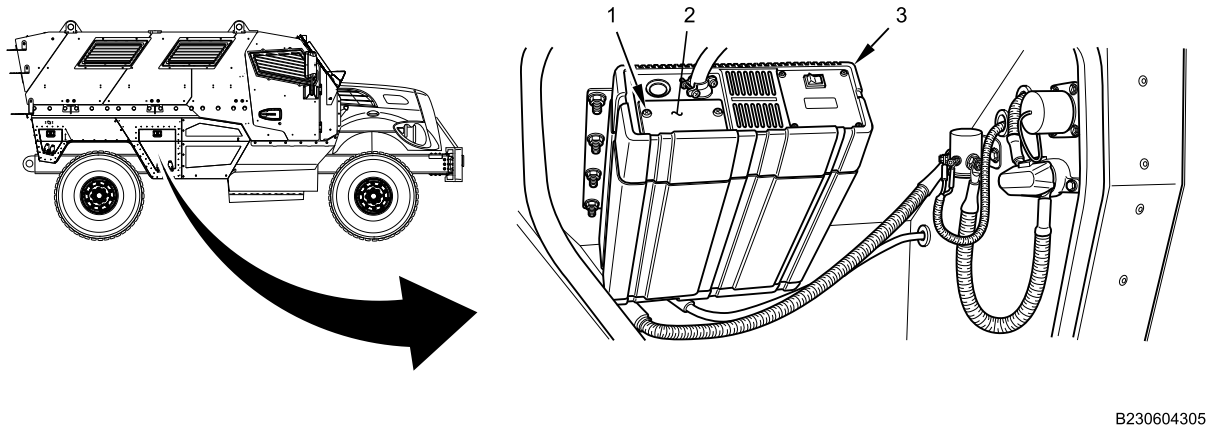

Figure 1. 110V Inverter Wiring.

2. Loosen terminals (Figure 2, Item 3, 4, and 5) securing wires to inverter (Figure 2, Item 6).

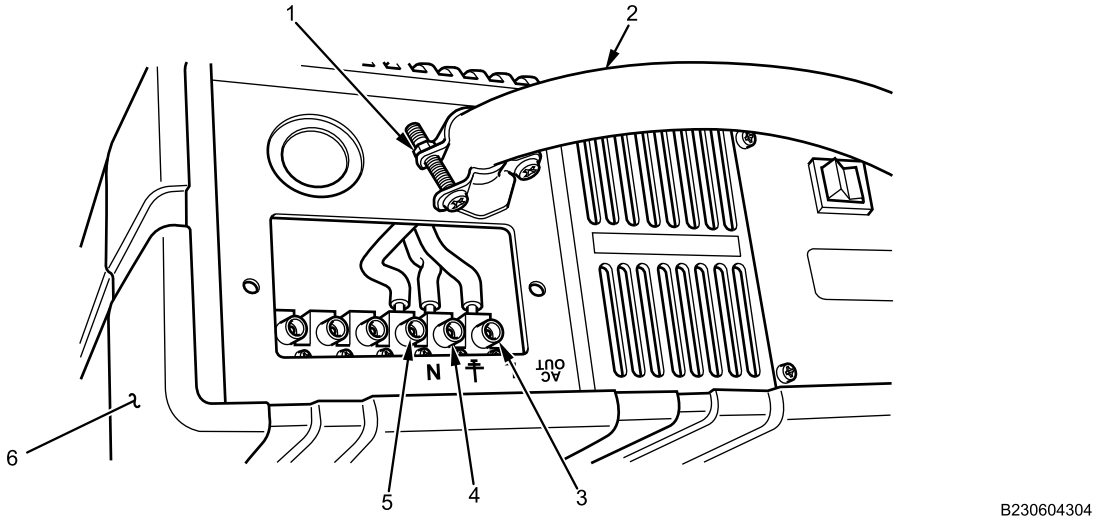

Figure 2. Inverter Circuit Connections.

3. Loosen screws (Figure 2, Item 1) on harness retainer and pull harness (Figure 2, Item 2) out of inverter (Figure 2, Item 6).

INVERTER AND MAIN POWER SWITCH SOLENOID CABLES REMOVAL AND INSTALLATION - (CONTINUED)

4. Remove nut (Figure 3, Item 1) and lockwasher (Figure 3, Item 2) securing positive cable (Figure 3, Item 4) to 110V MAIN POWER switch (Figure 3, Item 3). Discard lockwasher.

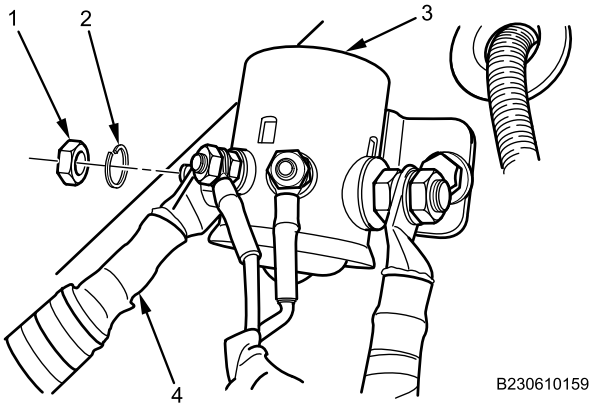

Figure 3. Positive Cable to MAIN POWER.

5. Remove eight flanged nuts (Figure 4, Item 1) securing inverter (Figure 4, Item 2) to stowage bin (Figure 4, Item 3). Set inverter on floor of stowage bin.

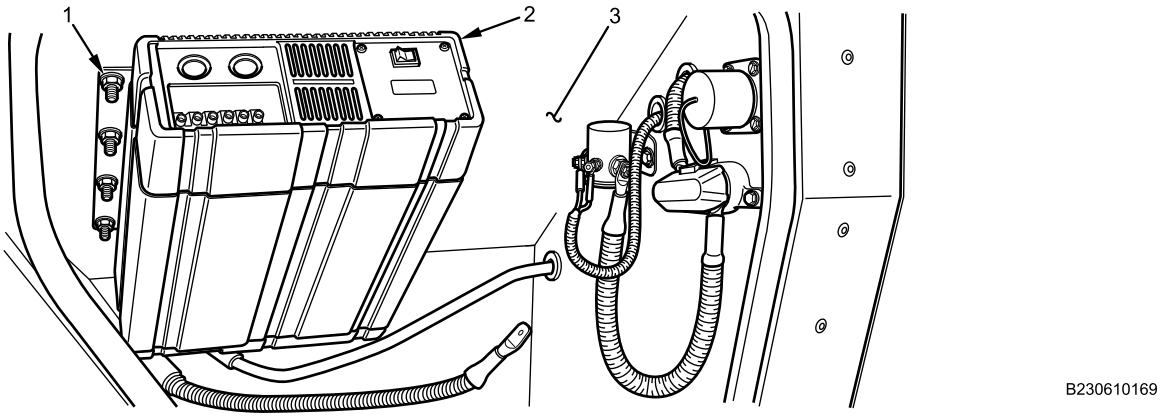

Figure 4. Inverter Mounting Nuts.

INVERTER AND MAIN POWER SWITCH SOLENOID CABLES REMOVAL AND INSTALLATION - (CONTINUED)

6. Slide positive and negative cable covers (Figure 5, Item 4 and 5) up on cable harnesses.

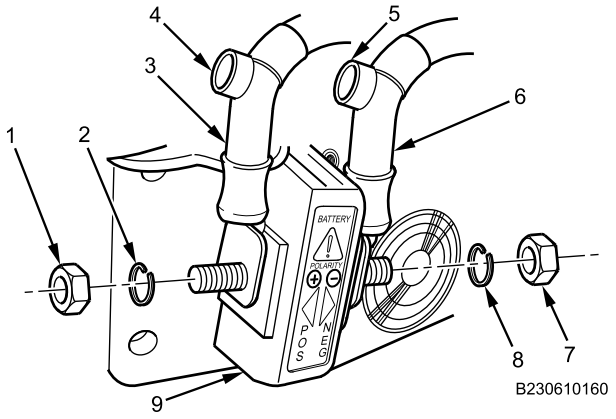

Figure 5. 110V Inverter Positive Cable.

7. Remove nut (Figure 5, Item 1) and lockwasher (Figure 5, Item 2) securing positive cable (Figure 5, Item 3) to inverter (Figure 5, Item 9). Discard lockwasher.
8. Remove nut (Figure 5, Item 7) and lockwasher (Figure 5, Item 8) securing negative cable (Figure 5, Item 6) to inverter (Figure 5, Item 9). Discard lockwasher.
9. Remove bolt (Figure 6, Item 3) and lockwasher (Figure 6, Item 2) from NATO jump start (Figure 6, Item 1) negative side. Discard lockwasher.

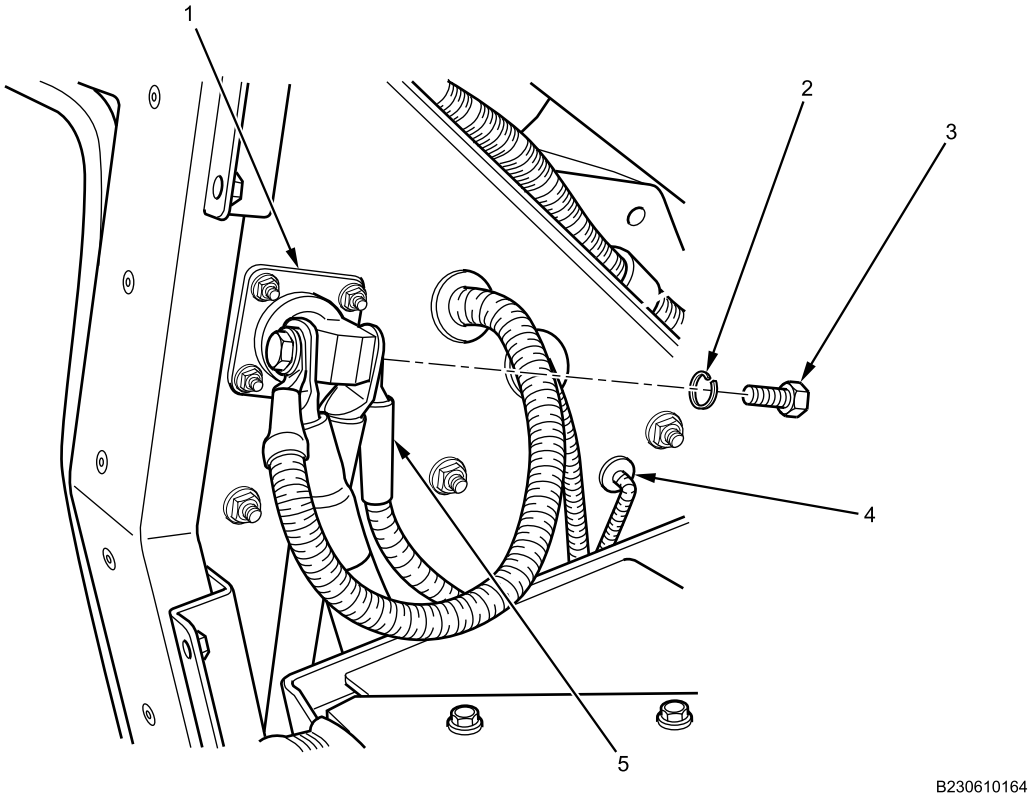

Figure 6. NATO Jump Start Negative Cable.

10. Pull negative cable (Figure 6, Item 5) through storage bin grommet (Figure 6, Item 4) and remove cable.

INVERTER AND MAIN POWER SWITCH SOLENOID CABLES REMOVAL AND INSTALLATION - (CONTINUED)

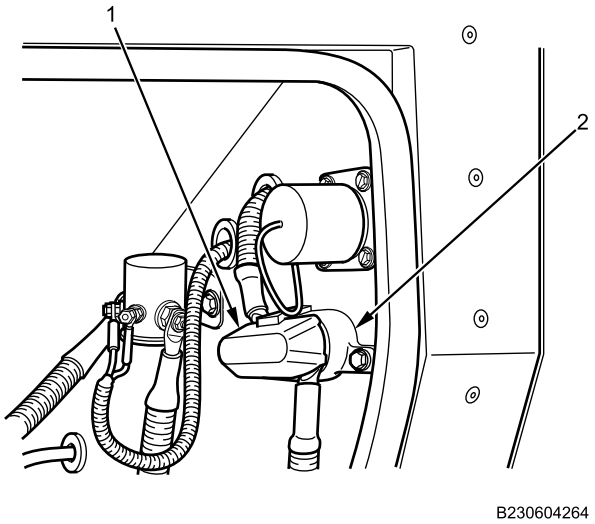

Figure 7. Positive Cable Mega-Fuse.

11. Lift up mega-fuse cover (Figure 7, Item 1) on mega-fuse (Figure 7, Item 2).

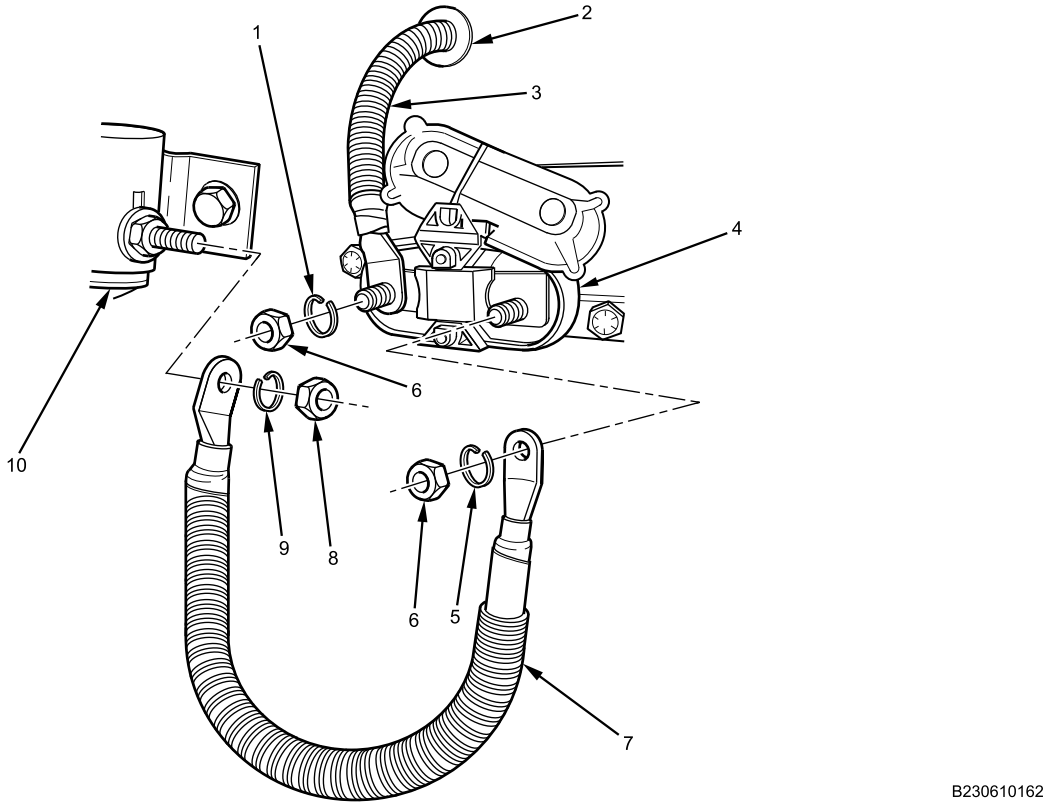

Figure 8. Mega-Fuse Cables.

12. Remove two nuts (Figure 8, Item 6), lockwashers (Figure 8, Item 1 and 5), and cables (Figure 8, Item 3 and 7) from mega-fuse holder (Figure 8, Item 4). Discard lockwashers.

INVERTER AND MAIN POWER SWITCH SOLENOID CABLES REMOVAL AND INSTALLATION - (CONTINUED)

13. Remove nut (Figure 8, Item 8), lockwasher (Figure 8, Item 9), and disconnect switch solenoid feed cable (Figure 8, Item 7) from disconnect switch solenoid (Figure 8, Item 10). Discard lockwasher.
14. Pull cable (Figure 8, Item 3) through grommet (Figure 8, Item 2) and out of storage bin.

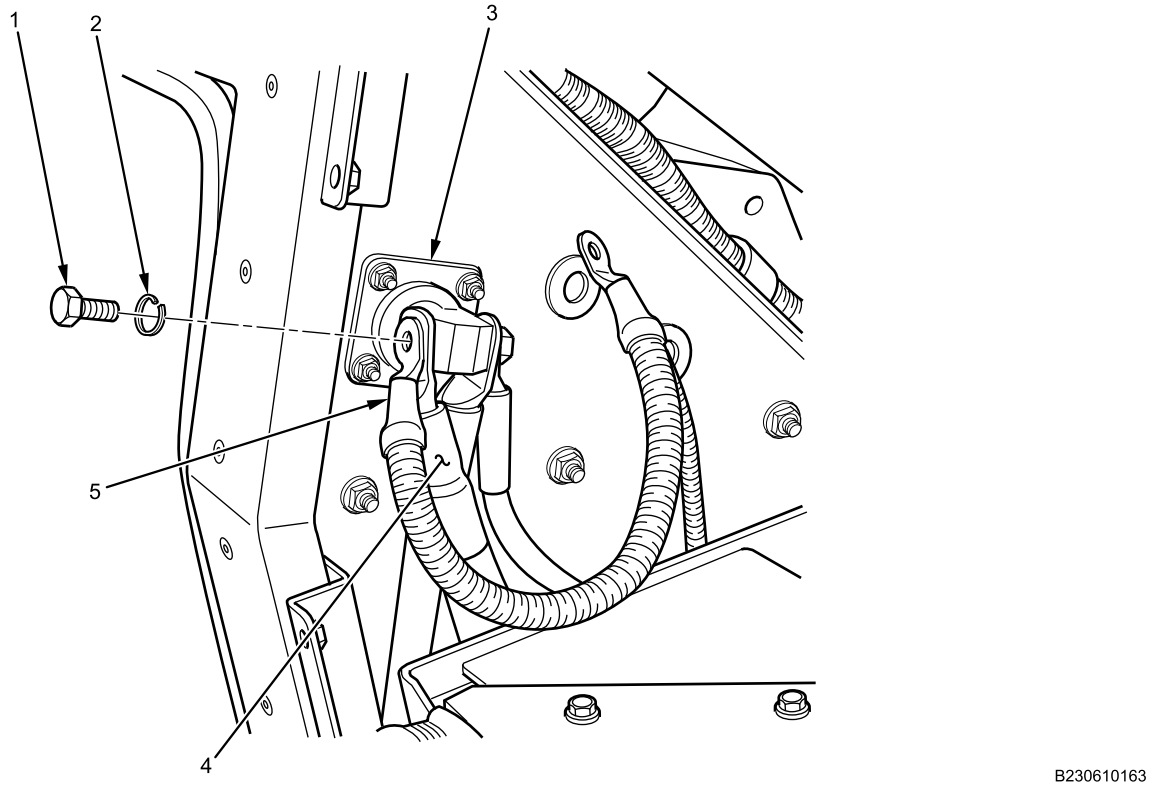

Figure 9. NATO Jump Start.

15. Remove bolt (Figure 9, Item 1), lockwasher (Figure 9, Item 2), and two cables (Figure 9, Item 4 and 5) from NATO jump start connector (Figure 9, Item 3) positive side. Discard lockwasher.

END OF TASK

INVERTER AND MAIN POWER SWITCH SOLENOID CABLES REMOVAL AND INSTALLATION - (CONTINUED)

INSTALLATION

WARNING

Dielectric grease is harmful to skin and eyes. If grease contacts eyes, rinse thoroughly and contact physician if irritation persists. If skin is contacted, wash thoroughly with soap and water. Failure to comply may result in serious injury to personnel.

NOTE

Apply dielectric grease to all connections before installation.

Ensure cable covers are installed to protect cables.

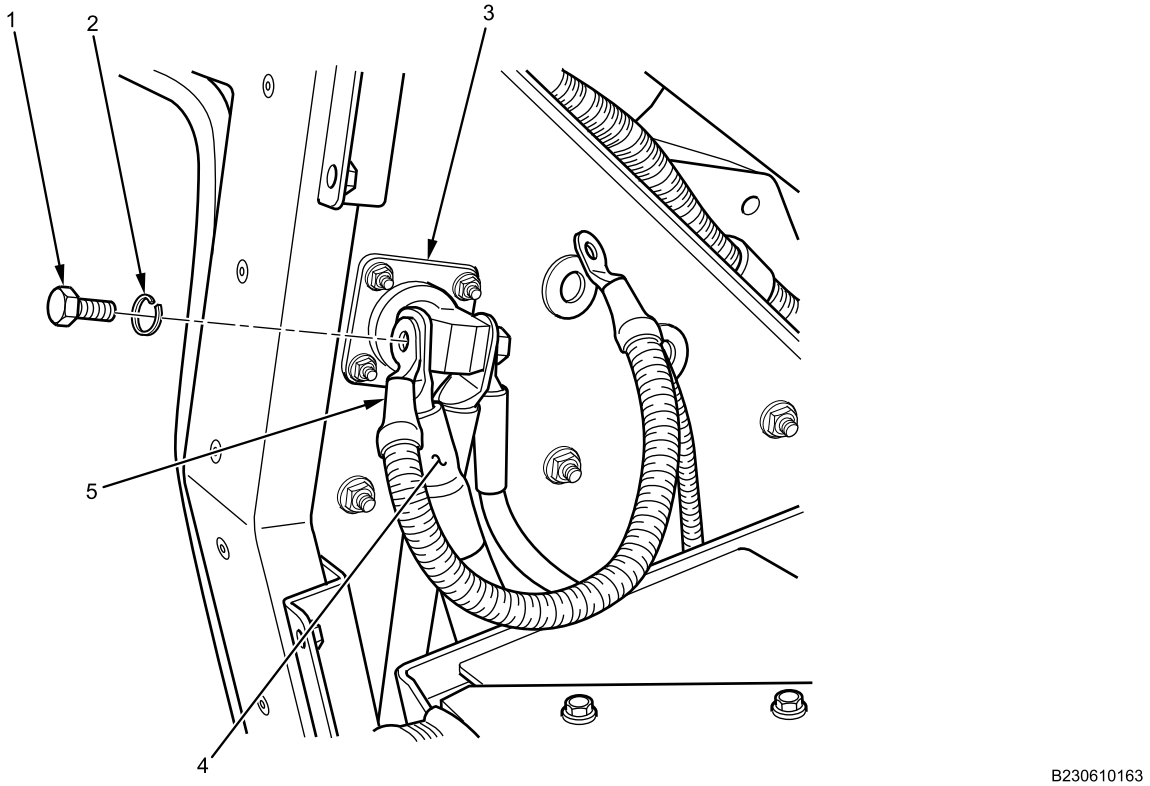

Figure 10. NATO Jump Start.

1. Install two positive cables (Figure 10, Item 4 and 5) on NATO jump start connector (Figure 10, Item 3) positive side with new lockwasher (Figure 10, Item 2) and bolt (Figure 10, Item 1). Tighten bolt securely.

INVERTER AND MAIN POWER SWITCH SOLENOID CABLES REMOVAL AND INSTALLATION - (CONTINUED)

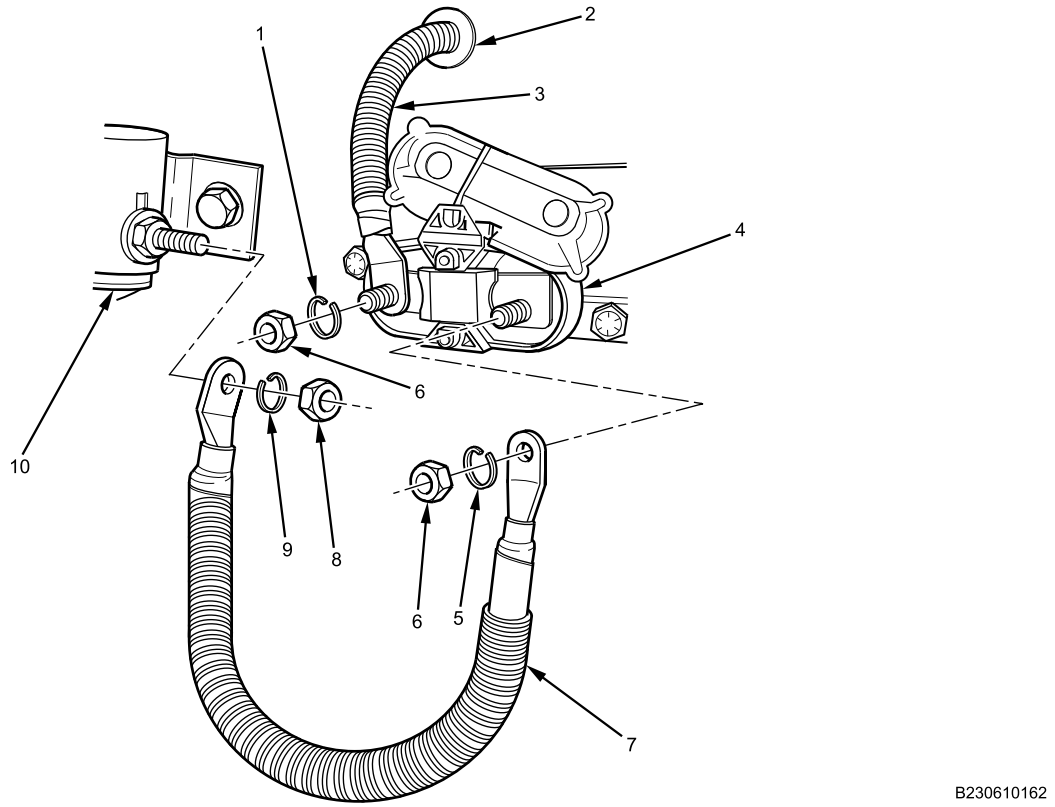

Figure 11. Mega-Fuse Cables.

2. Pull cable (Figure 11, Item 3) through grommet (Figure 11, Item 2) to mega-fuse holder (Figure 11, Item 4).
3. Install cable (Figure 11, Item 7) on disconnect switch solenoid (Figure 11, Item 10) with new lockwasher (Figure 11, Item 9) and nut (Figure 11, Item 8). Tighten nut securely.
4. Install two cables (Figure 11, Item 3 and 7) on mega-fuse (Figure 11, Item 4) with two new lockwashers (Figure 11, Item 1 and 5) and nuts (Figure 11, Item 6). Tighten nuts securely.

INVERTER AND MAIN POWER SWITCH SOLENOID CABLES REMOVAL AND INSTALLATION - (CONTINUED)

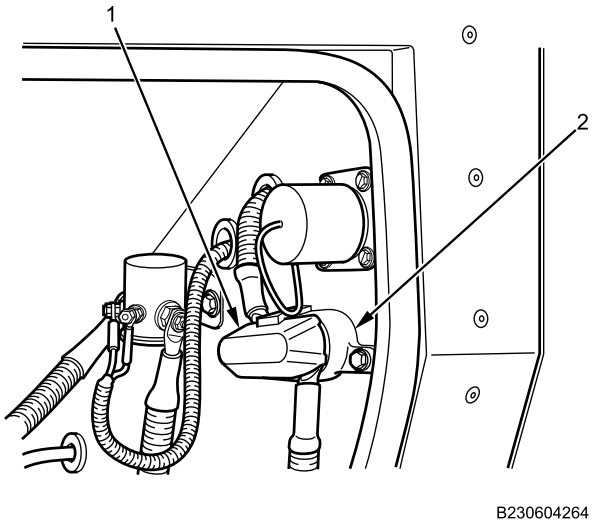

Figure 12. Mega-Fuse Cover.

5. Close mega-fuse cover (Figure 12, Item 1) on mega-fuse (Figure 12, Item 2).
6. Feed negative cable (Figure 13, Item 5) from inside storage bin through grommet (Figure 13, Item 4).

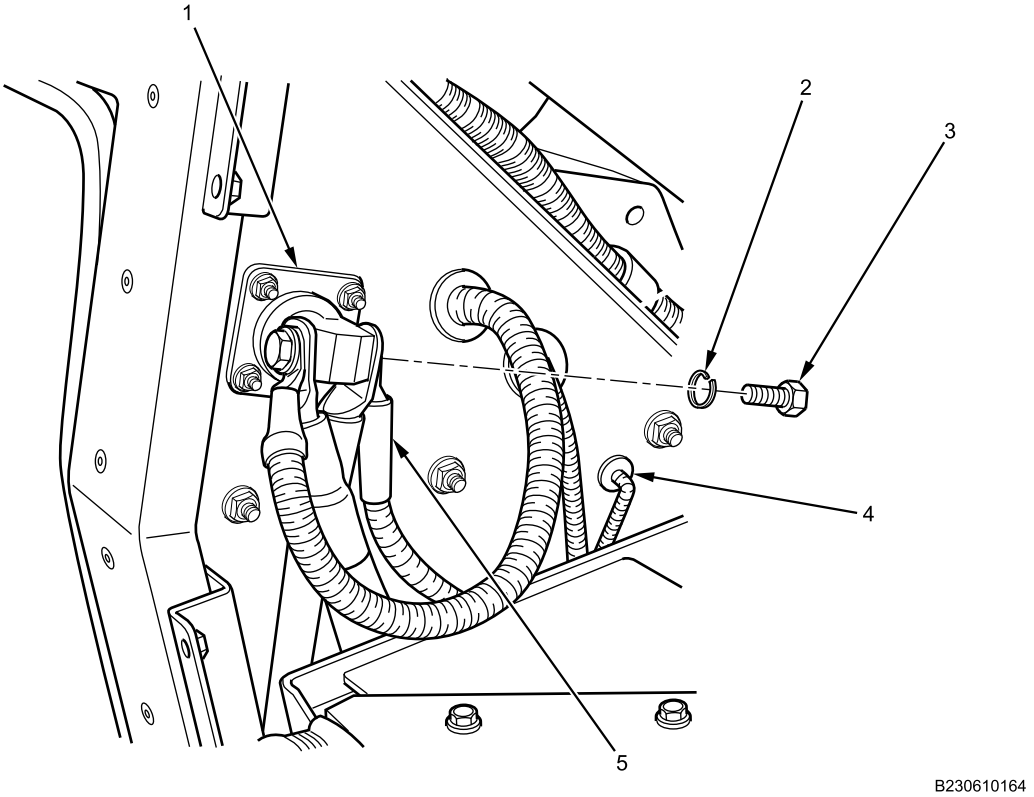

Figure 13. NATO Jump Start Negative Cable.

7. Install negative cable (Figure 13, Item 5) on negative side of NATO jump start connector (Figure 13, Item 1) with new lockwasher (Figure 13, Item 2) and bolt (Figure 13, Item 3). Tighten bolt securely.

INVERTER AND MAIN POWER SWITCH SOLENOID CABLES REMOVAL AND INSTALLATION - (CONTINUED)

8. Install positive cable (Figure 14, Item 3) on inverter (Figure 14, Item 9) with new lockwasher (Figure 14, Item 2) and nut (Figure 14, Item 1). Tighten nut securely.

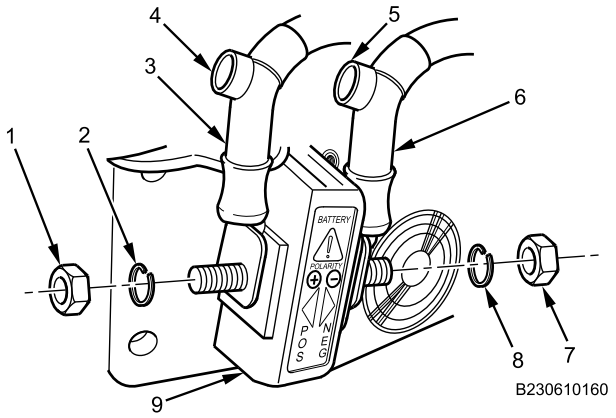

Figure 14. 110V Inverter Positive Cable Installation.

9. Install negative cable (Figure 14, Item 6) on inverter (Figure 14, Item 9) with new lockwasher (Figure 14, Item 8) and nut (Figure 14, Item 7). Tighten nut securely.
10. Slide positive and negative cable covers (Figure 14, Item 4 and 5) down on cables (Figure 14, Item 3 and 6) to cover cable ends.
11. Install inverter (Figure 15, Item 2) on stowage bin (Figure 15, Item 3) with eight flanged nuts (Figure 15, Item 1). Tighten nuts securely.

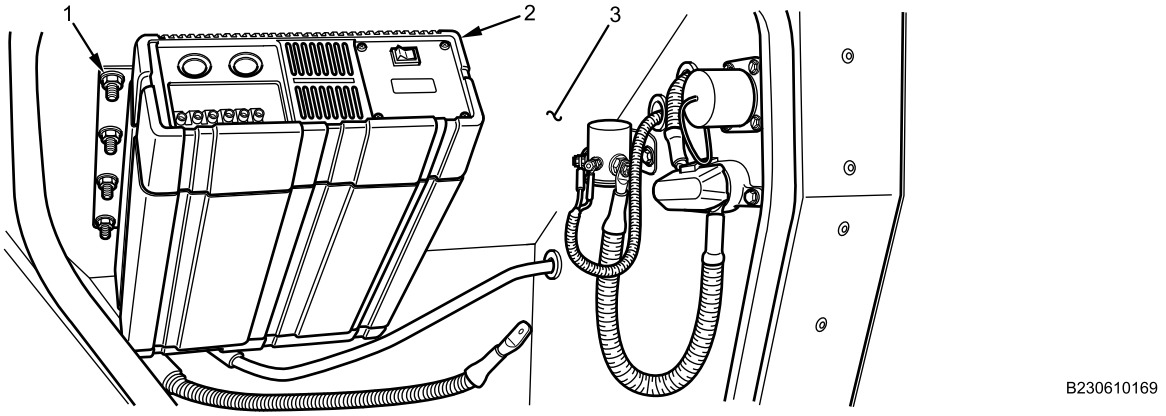

Figure 15. 110V Inverter Installation.

12. Install positive cable (Figure 16, Item 4) on 110V MAIN POWER switch (Figure 16, Item 3) with new lockwasher (Figure 16, Item 2) and nut (Figure 16, Item 1). Tighten nut securely.

INVERTER AND MAIN POWER SWITCH SOLENOID CABLES REMOVAL AND INSTALLATION - (CONTINUED)

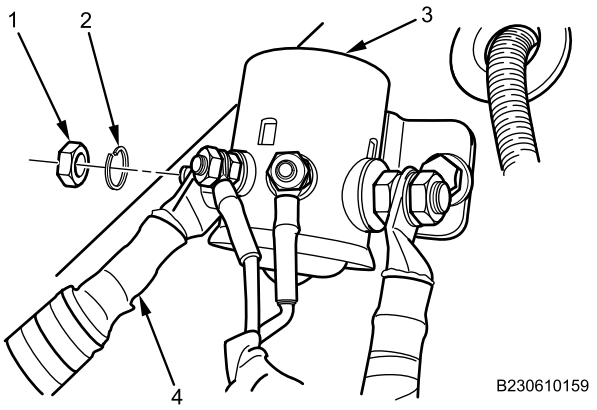

Figure 16. Positive Cable to MAIN POWER.

13. Insert harness (Figure 17, Item 2) in retainer on inverter (Figure 17, Item 6), and tighten screws (Figure 17, Item 1) on retainer securely.

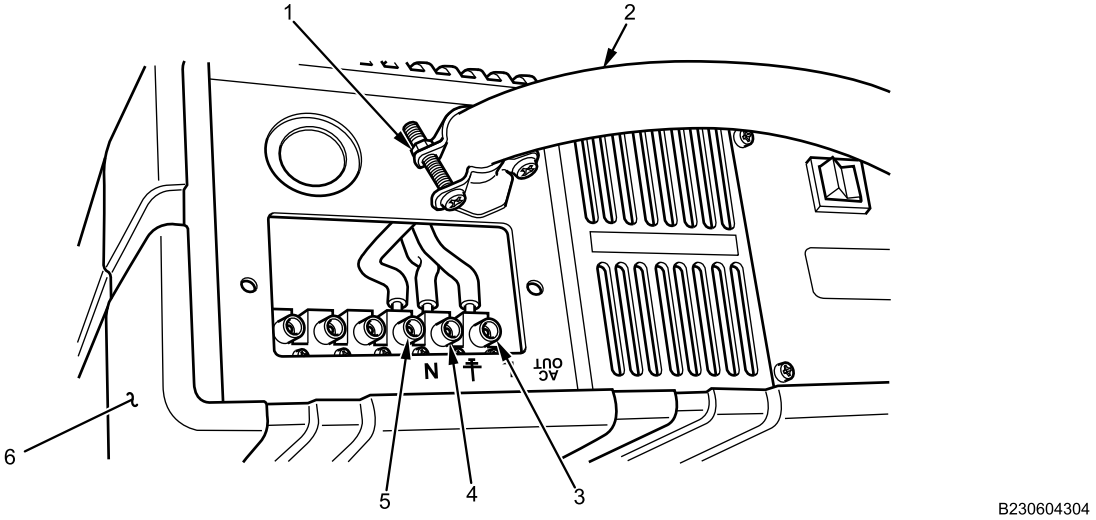

Figure 17. 110V Inverter Connections.

14. Connect wires to inverter terminals as follows and tighten securely:
    a. GREEN wire to center ground terminal (Figure 17, Item 4).
    b. WHITE wire to N terminal (Figure 17, Item 5).
    c. BLACK wire to L terminal (Figure 17, Item 3).

INVERTER AND MAIN POWER SWITCH SOLENOID CABLES REMOVAL AND INSTALLATION - (CONTINUED)

15. Install wiring cover (Figure 18, Item 2) on inverter (Figure 18, Item 3) with two screws (Figure 18, Item 1). Tighten screws securely.

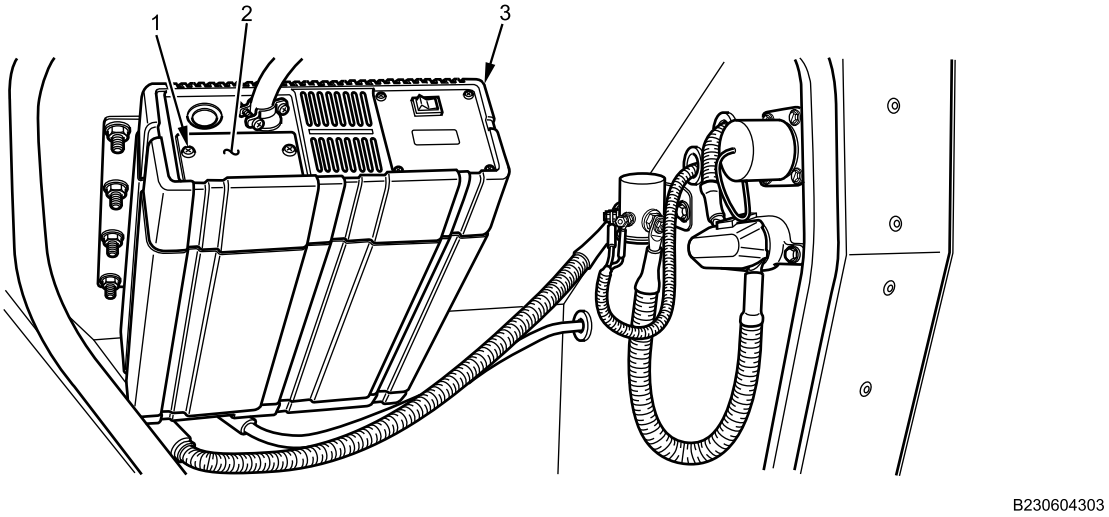

Figure 18. 110V Inverter Wiring.

END OF TASK

FOLLOW-ON MAINTENANCE

1. Install A/C condenser panel (WP 0672).
2. Connect battery cables (WP 0404).
3. Turn MAIN POWER switch on (TM 9-2355-106-10).
4. Verify battery operation (TM 9-2355-106-10).
5. Turn MAIN POWER switch off (TM 9-2355-106-10).
6. Remove wheel chocks (TM 9-2355-106-10).

END OF TASK

END OF WORK PACKAGE

FIELD MAINTENANCE

TRANSMISSION AUTO SHIFT CONTROL MODULE REMOVAL AND INSTALLATION

INITIAL SETUP:

Tools and Special Tools
General Mechanic's Tool Kit (GMTK) (WP 0795, Item 37)
Screwdriver attachment, Torx bit, 1/4-inch drive, T-20 (WP 0795, Item 8)

Materials/Parts
Grease (WP 0794, Item 22)
Gloves (WP 0794, Item 18)
Cable lock strap (WP 0796, Item 124)

References
TM 9-2355-106-10
TM 9-2355-106-23P
WP 0786
WP 0782

Equipment Condition
Parking brake set (TM 9-2355-106-10)
Transmission set in NEUTRAL (N) (TM 9-2355-106-10)
Engine off (TM 9-2355-106-10)
MAIN POWER switch off (TM 9-2355-106-10)
Wheels chocked (TM 9-2355-106-10)
Battery cables disconnected (WP 0404)

REMOVAL

1. Remove harness cable tie (Figure 1, Item 3) from transmission driver control assembly (Figure 1, Item 2) and harnesses.

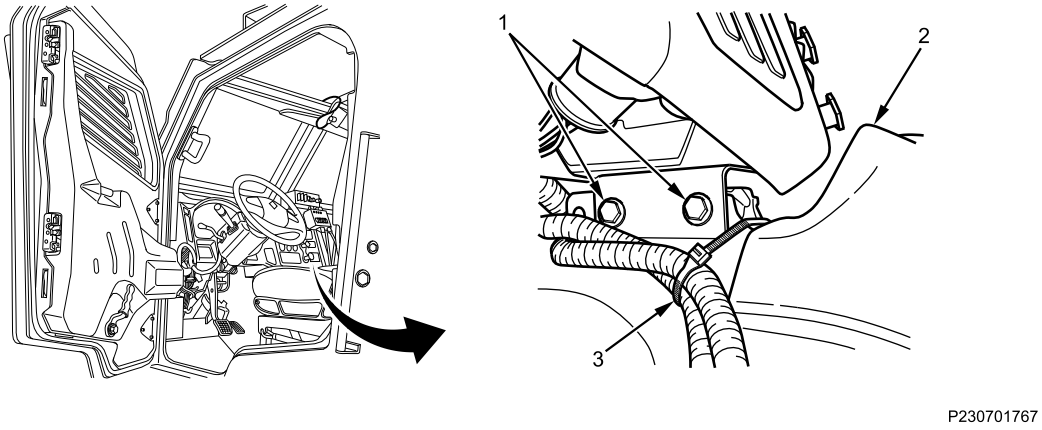

Figure 1. Transmission Driver Control Assembly.

2. Remove two bolts (Figure 1, Item 1) securing transmission driver control assembly (Figure 1, Item 2) to instrument panel frame.

TRANSMISSION AUTO SHIFT CONTROL MODULE REMOVAL AND INSTALLATION - (CONTINUED)

3. Disconnect transmission auto shift control module harness (Figure 2, Item 1) from transmission auto shift control module (Figure 2, Item 2).

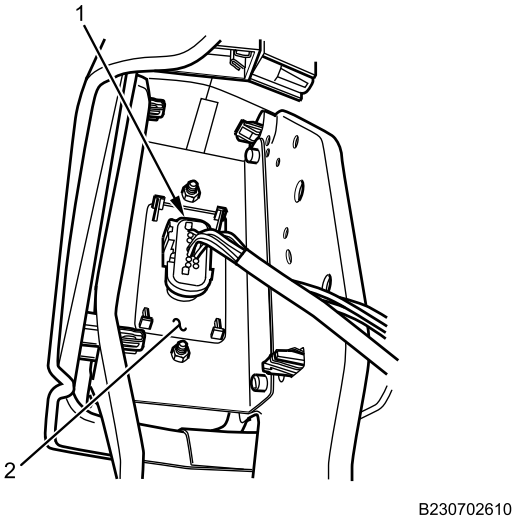

Figure 2. Transmission Auto Shift Control Module Harness.

4. Remove screw shroud cover (Figure 3, Item 4) from right side transmission driver control assembly panel (Figure 3, Item 2).

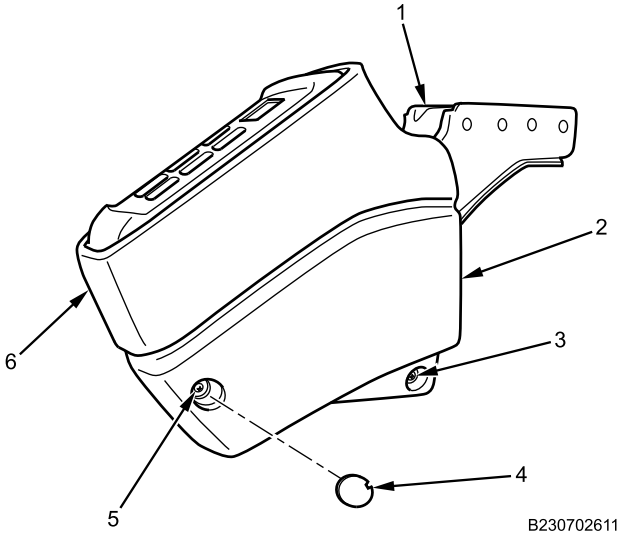

Figure 3. Transmission Driver Control Assembly Panels.

5. Remove screws (Figure 3, Item 3 and 5) from right side transmission driver control assembly panel (Figure 3, Item 2).
6. Remove transmission driver control assembly panels (Figure 3, Item 2 and 6) from transmission driver control assembly frame (Figure 3, Item 1).

TRANSMISSION AUTO SHIFT CONTROL MODULE REMOVAL AND INSTALLATION - (CONTINUED)

7. Remove transmission auto shift control module nuts (Figure 4, Item 1) from transmission driver control assembly frame (Figure 4, Item 2), and remove transmission auto shift control module (Figure 4, Item 3).

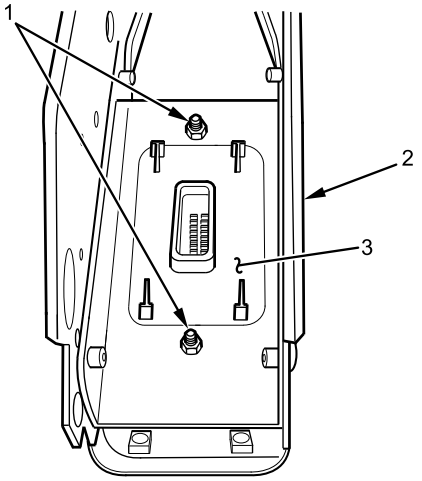

B230701458

Figure 4. Transmission Auto Shift Control Module.

END OF TASK

INSTALLATION

1. Position transmission auto shift control module (Figure 5, Item 3) on transmission driver control assembly frame (Figure 5, Item 2), and install transmission auto shift control module nuts (Figure 5, Item 1). Tighten nuts securely.

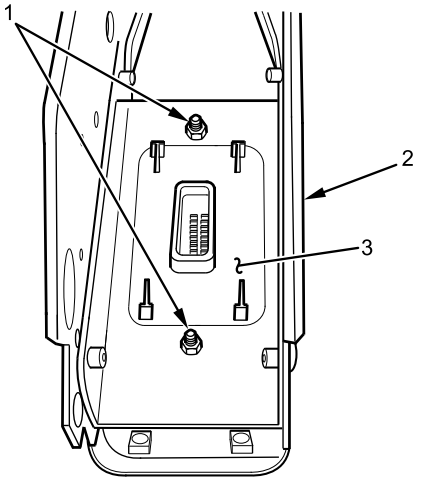

B230701458

Figure 5. Transmission Auto Shift Control Module.

TRANSMISSION AUTO SHIFT CONTROL MODULE REMOVAL AND INSTALLATION - (CONTINUED)

2. Install transmission driver control assembly panels (Figure 6, Item 2 and 6) on transmission driver control assembly frame (Figure 6, Item 1).

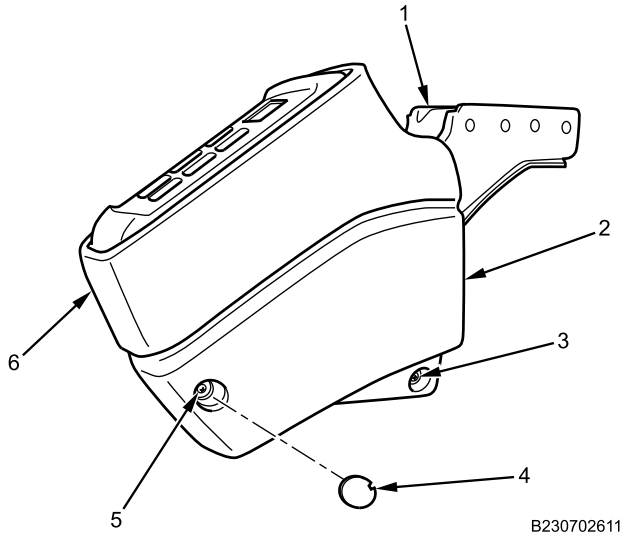

Figure 6. Transmission Driver Control Assembly Panels.

3. Install screws (Figure 6, Item 3 and 5) on right side transmission driver control assembly panel (Figure 6, Item 2) and tighten securely.
4. Install screw shroud cover (Figure 6, Item 4) on right side transmission driver control assembly panel (Figure 6, Item 2).

TRANSMISSION AUTO SHIFT CONTROL MODULE REMOVAL AND INSTALLATION - (CONTINUED)

WARNING

Dielectric grease is harmful to skin and eyes. If grease contacts eyes, rinse thoroughly and contact physician if irritation persists. If skin is contacted, wash thoroughly with soap and water. Failure to comply may result in serious injury to personnel.

5. Apply dielectric grease to control module harness connector (Figure 7, Item 1).

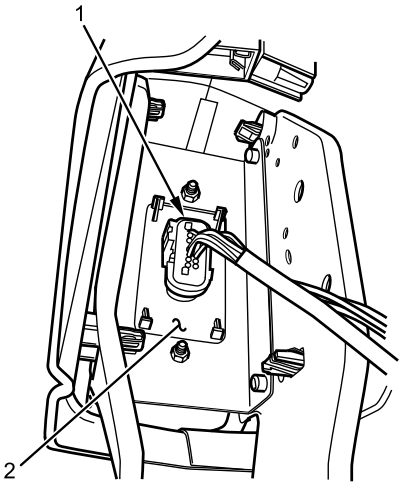

B230702610

Figure 7. Control Module Harness.

6. Connect control module harness (Figure 7, Item 1) on control module (Figure 7, Item 2).

TRANSMISSION AUTO SHIFT CONTROL MODULE REMOVAL AND INSTALLATION - (CONTINUED)

7. Position transmission driver control assembly (Figure 8, Item 2) on instrument panel frame and install two bolts (Figure 8, Item 1). Tighten bolts securely.

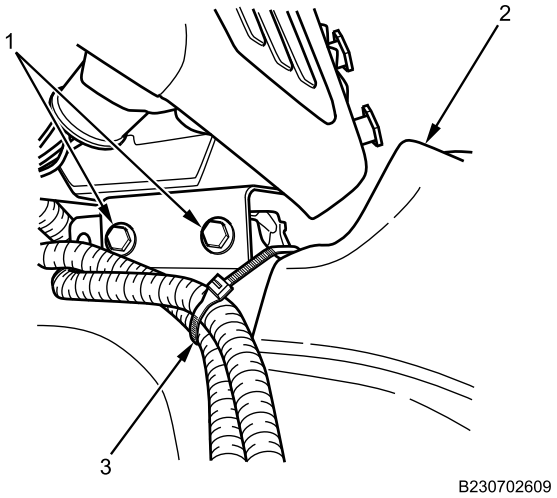

Figure 8. Transmission Driver Control Assembly.

8. Install harness cable tie (Figure 8, Item 3) on transmission driver control assembly (Figure 8, Item 2) and harnesses.

END OF TASK

FOLLOW-ON MAINTENANCE

1. Connect battery cables (WP 0404).
2. Turn MAIN POWER switch on (TM 9-2355-106-10).
3. Remove wheel chocks (TM 9-2355-106-10).
4. Test-drive vehicle to verify transmission system operation (TM 9-2355-106-10).
5. Set transmission in NEUTRAL (N) (TM 9-2355-106-10).
6. Set vehicle parking brake (TM 9-2355-106-10).
7. Turn engine off (TM 9-2355-106-10).
8. Turn MAIN POWER switch off (TM 9-2355-106-10).

END OF TASK

END OF WORK PACKAGE

FIELD MAINTENANCE

TRANSMISSION CONTROL MODULE AND BRACE REMOVAL AND INSTALLATION

INITIAL SETUP:

Tools and Special Tools
General Mechanic's Tool Kit (GMTK) (WP 0795, Item 37)
Wrench, torque, dial, 30 lb-in., 1/4-inch drive (WP 0795, Item 146)

Materials/Parts
Compound (WP 0794, Item 13)
Grease (WP 0794, Item 22)
Gloves (WP 0794, Item 18)
Faceshield, industrial (WP 0794, Item 16)
Goggles, industrial (WP 0794, Item 20)

References
TM 9-2355-106-10
TM 9-2355-106-23P
WP 0786
WP 0782

Equipment Condition
Parking brake set (TM 9-2355-106-10)
Transmission set in NEUTRAL (N) (TM 9-2355-106-10)
Engine off (TM 9-2355-106-10)
MAIN POWER switch off (TM 9-2355-106-10)
Wheels chocked (TM 9-2355-106-10)
Battery cables disconnected (WP 0404)
Belly armor removed (WP 0606)
Fuel tank removed (WP 0265)

WARNING

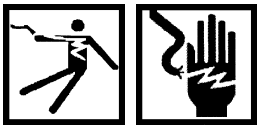

Use extreme caution when testing or working on or around electrical circuits. Always assume that electrical circuits are live. Electrical shock can occur upon contact with voltage high enough to cause current flow through muscles or nerves. On Direct Current (DC) systems, generally 1 milliamp of current can be felt, 5 milliamps can cause severe pain, 15 milliamps can cause loss of muscle control, and 70 milliamps can be fatal. Wear protective clothing; ensure skin, clothing, and surrounding areas are dry; do not wear jewelry; and touch only the insulated, nonmetallic parts of electrical components and testing equipment. To prevent electrical arcing, avoid shorting electrical test probes and jumper wires. Electrical arcing can cause bright flashes of light, capable of causing temporary blindness. If electrical injury occurs, immediately shut off power supply and seek medical assistance. Failure to comply may result in serious injury or death to personnel.

NOTE

Transmission control unit is located on brace inboard of the left frame rail, behind the fuel tank.

TRANSMISSION CONTROL MODULE AND BRACE REMOVAL AND INSTALLATION - (CONTINUED)

REMOVAL

1. Remove two nuts (Figure 1, Item 2) and transmission control unit cover (Figure 1, Item 3) from transmission control unit brace (Figure 1, Item 1).

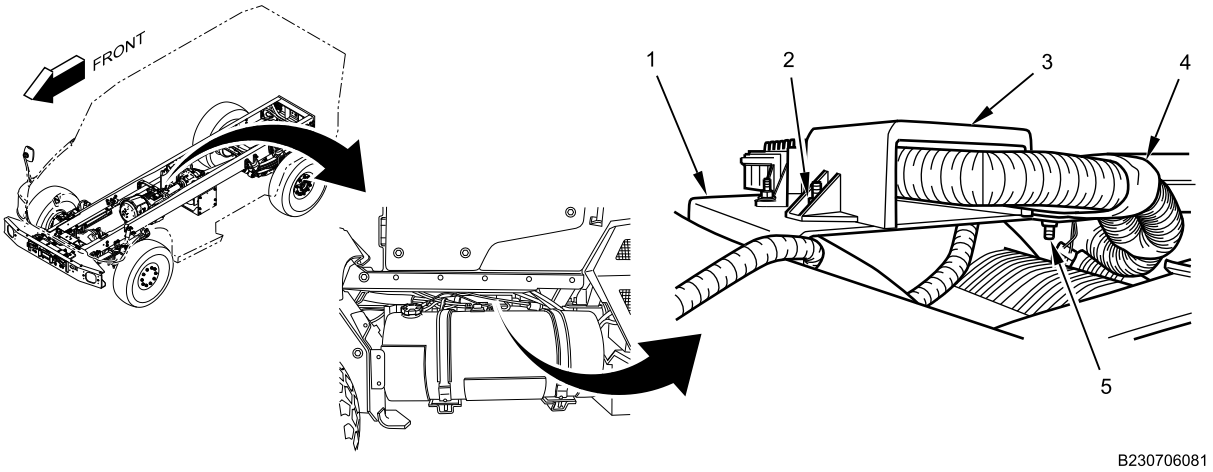

Figure 1. Transmission Control Unit Cover.

2. Remove nut and bolt (Figure 1, Item 5) from harness support retainer (Figure 1, Item 4) on transmission control unit brace (Figure 1, Item 1).
3. Remove transmission control unit harness retaining bolt (Figure 2, Item 2) and transmission control unit harness connector (Figure 2, Item 3) from transmission control unit (Figure 2, Item 1).

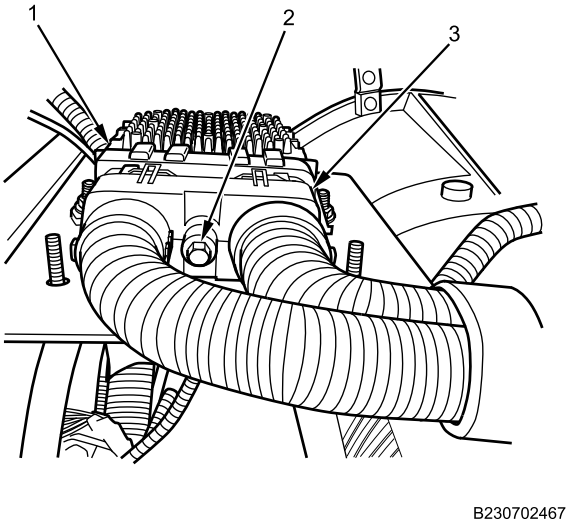

Figure 2. Transmission Control Unit Harness.

TRANSMISSION CONTROL MODULE AND BRACE REMOVAL AND INSTALLATION - (CONTINUED)

4. Remove three transmission control unit retaining nuts (Figure 3, Item 1 and 3) and transmission control unit (Figure 3, Item 2) from transmission control unit brace (Figure 3, Item 4). One transmission control unit retaining nut not shown.

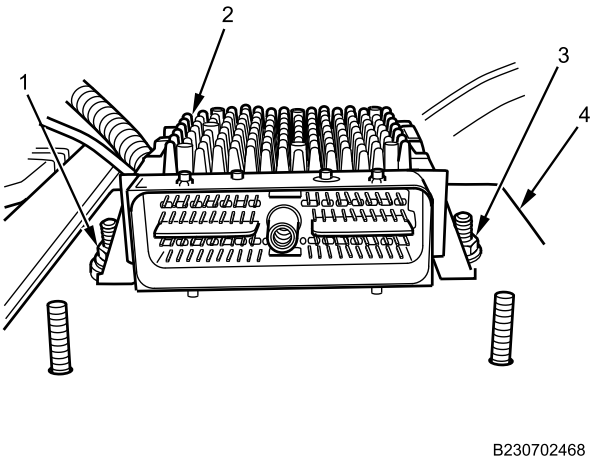

Figure 3. Transmission Control Unit.

NOTE

Transmission brace nuts are on outboard side of left frame rail, behind fuel tank.

Transmission brace bolts are welded to transmission brace.

5. Remove transmission control unit brace mounting nuts (Figure 4, Item 2 and 3) from frame rail (Figure 4, Item 1). Remove transmission control unit brace.

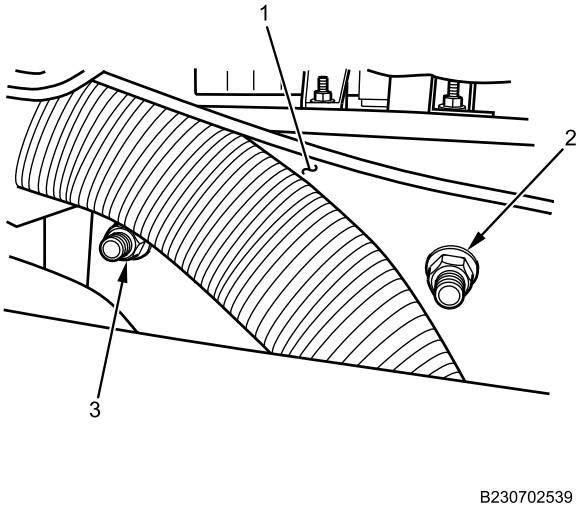

Figure 4. Transmission Control Unit Brace.

END OF TASK

TRANSMISSION CONTROL MODULE AND BRACE REMOVAL AND INSTALLATION - (CONTINUED)

INSTALLATION

WARNING

Corrosion preventive compound is toxic. Use only in well-ventilated area. Do not get in eyes; wear chemical safety goggles and full-face shield when using. Avoid contact with skin and wear rubber or plastic, solvent-resistant gloves. In case of contact, remove contaminated clothing and immediately wash area with soap and water. If compound contacts eyes, flush eyes with large amounts of water for at least 15 minutes and get immediate medical attention. If swallowed, do not induce vomiting; contact a physician immediately. Failure to comply may result in serious injury or death to personnel.

Dielectric grease is harmful to skin and eyes. If grease contacts eyes, rinse thoroughly and contact physician if irritation persists. If skin is contacted, wash thoroughly with soap and water. Failure to comply may result in serious injury to personnel.

NOTE

Apply corrosion preventive compound to all nuts, screws, and bolts before installation.

Apply dielectric grease to all electrical connectors before installation.

1. Position transmission control unit brace on frame rail (Figure 5, Item 1) and install mounting nuts (Figure 5, Item 2 and 3). Tighten nuts securely.

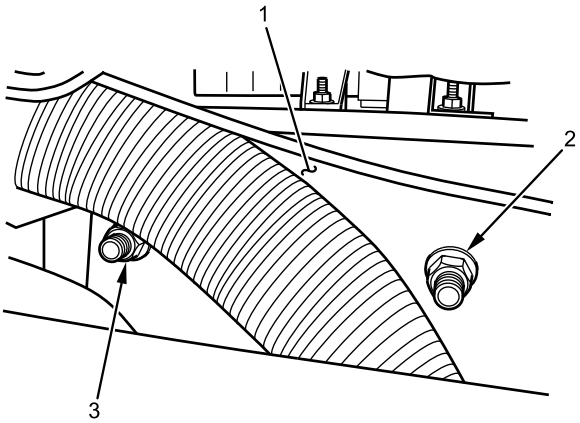

Figure 5. Transmission Control Unit Brace.

TRANSMISSION CONTROL MODULE AND BRACE REMOVAL AND INSTALLATION - (CONTINUED)

2. Install three transmission control unit (Figure 6, Item 2) and retaining nuts (Figure 6, Item 1 and 3) on brace (Figure 6, Item 4). One transmission control unit nut not shown. Tighten nuts securely.

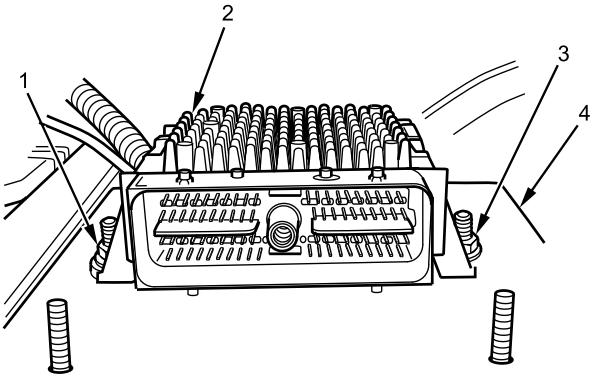

Figure 6. Transmission Control Unit.

3. Install harness connector (Figure 7, Item 3) and retaining bolt (Figure 7, Item 2) on transmission control unit (Figure 7, Item 1). Torque bolt to 28 lb-in. (3.2 N•m).

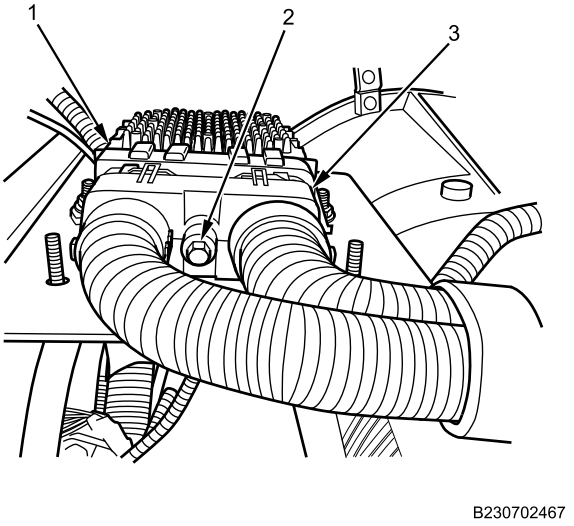

Figure 7. Transmission Control Unit Harness.

TRANSMISSION CONTROL MODULE AND BRACE REMOVAL AND INSTALLATION - (CONTINUED)

4. Install nut and bolt (Figure 8, Item 5) on harness support retainer (Figure 8, Item 4) on transmission control unit brace (Figure 8, Item 1). Tighten nut and bolt securely.

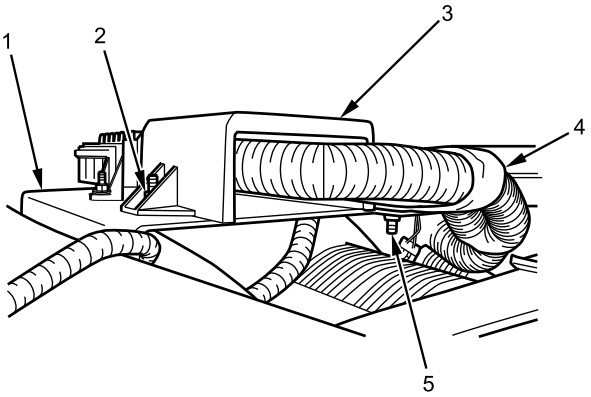

Figure 8. Transmission Control Unit Cover.

5. Install cover (Figure 8, Item 3) and two nuts (Figure 8, Item 2) on brace (Figure 8, Item 1). Tighten nuts securely.

END OF TASK

FOLLOW-ON MAINTENANCE

1. Install fuel tank (WP 0265).
2. Connect battery cables (WP 0404).
3. Turn MAIN POWER switch on (TM 9-2355-106-10).
4. Remove wheel chocks (TM 9-2355-106-10).
5. Test-drive vehicle to verify transmission system operation (TM 9-2355-106-10).
6. Set transmission in NEUTRAL (N) (TM 9-2355-106-10).
7. Set parking brake (TM 9-2355-106-10).
8. Turn engine off (TM 9-2355-106-10).
9. Turn MAIN POWER switch off (TM 9-2355-106-10).
10. Install wheel chocks (TM 9-2355-106-10).
11. Install belly armor (WP 0606).
12. Remove wheel chocks (TM 9-2355-106-10).

END OF TASK

END OF WORK PACKAGE

FIELD MAINTENANCE

TRANSMISSION ASSEMBLY REMOVAL AND INSTALLATION

INITIAL SETUP:

Tools and Special Tools
General Mechanic's Tool Kit (GMTK) (WP 0795, Item 37)
Jack, transmission (WP 0795, Item 61)
Wrench, torque, 15-75 lb-ft, 3/8-inch drive (WP 0795, Item 145)
Wrench, torque, dial, 1/4-inch drive, 30 lb-in. (WP 0795, Item 146)
Wrench, combination, standard length, 12 pt, chrome 32 mm (WP 0795, Item 138)
Pan, drain, 5-gal. capacity (WP 0795, Item 75)

Materials/Parts
Lubricating oil (WP 0794, Item 27)
Compound (WP 0794, Item 13)
Compound (WP 0794, Item 41)
Faceshield, industrial (WP 0794, Item 16)
Goggles, industrial (WP 0794, Item 20)
Gloves (WP 0794, Item 19)
Cable lock straps (WP 0796, Item 124)
Seal (WP 0796, Item 33)
O-rings - (4) (WP 0796, Item 181)

Personnel Required
Maintainer - (2)

References
TM 9-2355-106-10
TM 9-2355-106-23P
WP 0786
WP 0782

Equipment Condition
Parking brake set (TM 9-2355-106-10)
Transmission set in NEUTRAL (N) (TM 9-2355-106-10)
Engine off (TM 9-2355-106-10)
MAIN POWER switch off (TM 9-2355-106-10)
Wheels chocked (TM 9-2355-106-10)
Engine hood open and secured (TM 9-2355-106-10)
Belly armor removed (WP 0606)
Transmission-to-transfer case driveshaft removed (WP 0469)
Starter removed (WP 0292)
Transmission fluid drained (WP 0457)
Air cleaner assembly removed (WP 0257)

WARNING

Engine hood is extremely heavy and requires two-person lift. Ensure that there is adequate space in front of the vehicle to open hood completely without pinning or pinching personnel between hood and any other structure. Use extreme care when working under hood and make sure it is properly supported. Failure to comply may result in serious injury or death to personnel.

Use care when working with hot transmission and fluid during maintenance procedures. Wear protective goggles, work gloves, and long sleeves to avoid injury. Avoid contact with hot transmission oil or sump when draining transmission oil. If transmission oil temperature is above 220°F (104°C), allow transmission oil to cool before removing dipstick. Failure to comply may result in serious injury or death to personnel.

TRANSMISSION ASSEMBLY REMOVAL AND INSTALLATION - (CONTINUED)

REMOVAL

NOTE

Remove cable lock straps as necessary and note location for proper installation.

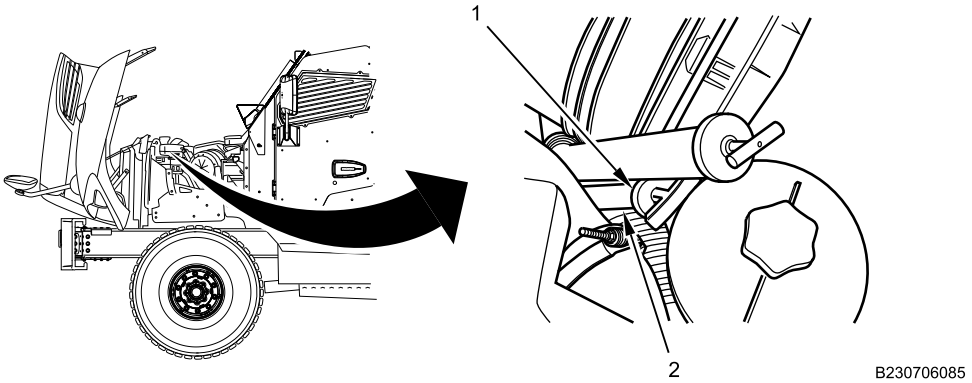

Figure 1. Transmission Dipstick.

1. Remove transmission dipstick (Figure 1, Item 1) from dipstick tube (Figure 1, Item 2).

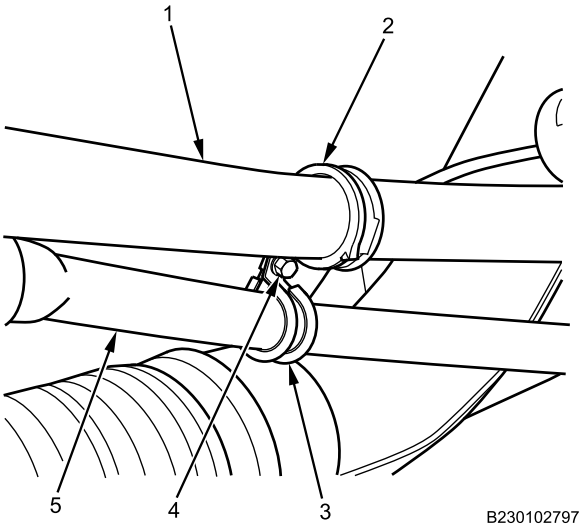

Figure 2. Oil Gauge Tube and Transmission Dipstick Retainer.

2. Remove bolt and nut (Figure 2, Item 4) securing retainers (Figure 2, Item 2 and 3), and separate transmission dipstick tube (Figure 2, Item 5) and oil gauge tube (Figure 2, Item 1).

TRANSMISSION ASSEMBLY REMOVAL AND INSTALLATION - (CONTINUED)

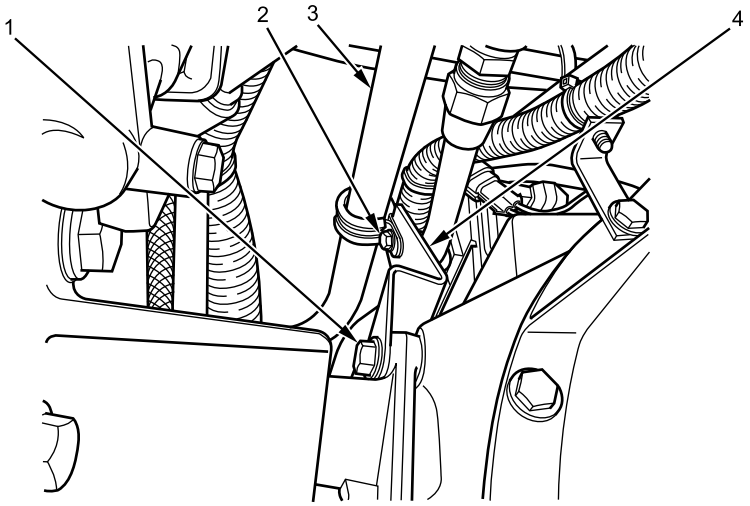

Figure 3. Upper Retainer.

3. Remove bolt (Figure 3, Item 2) and nut from retainer for upper dipstick tube (Figure 3, Item 3).
4. Remove two bolts (Figure 3, Item 1) and retainer mounting plate (Figure 3, Item 4).

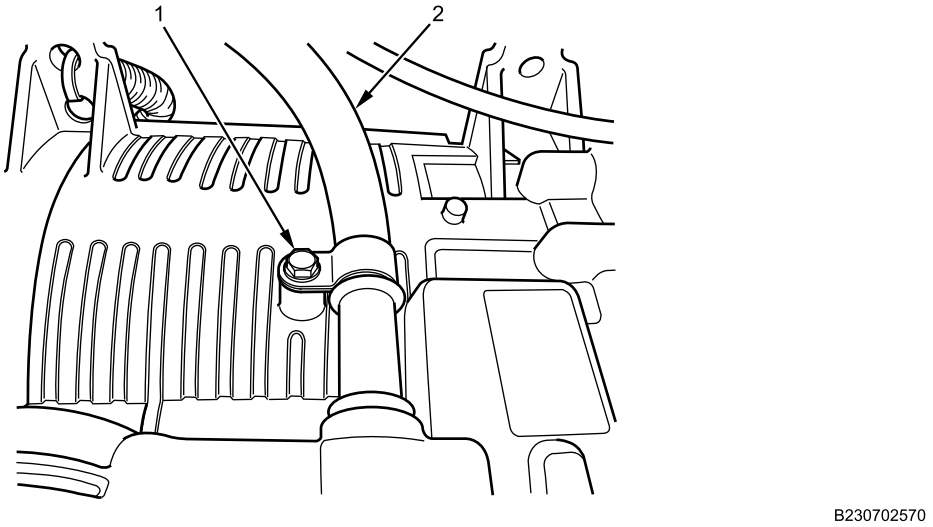

Figure 4. Lower Retainer.

5. Remove bolt (Figure 4, Item 1) from retainer for lower dipstick tube (Figure 4, Item 2).

TRANSMISSION ASSEMBLY REMOVAL AND INSTALLATION - (CONTINUED)

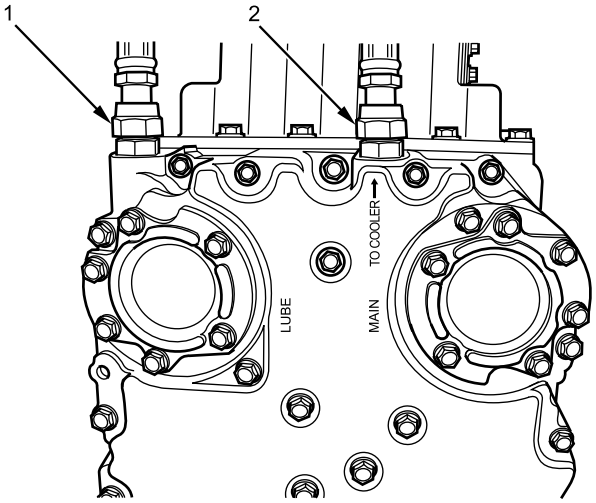

B230702575

Figure 5. Cooler Hoses.

6. Position drain pan under transmission and remove inlet hose (Figure 5, Item 1) and outlet hose (Figure 5, Item 2).

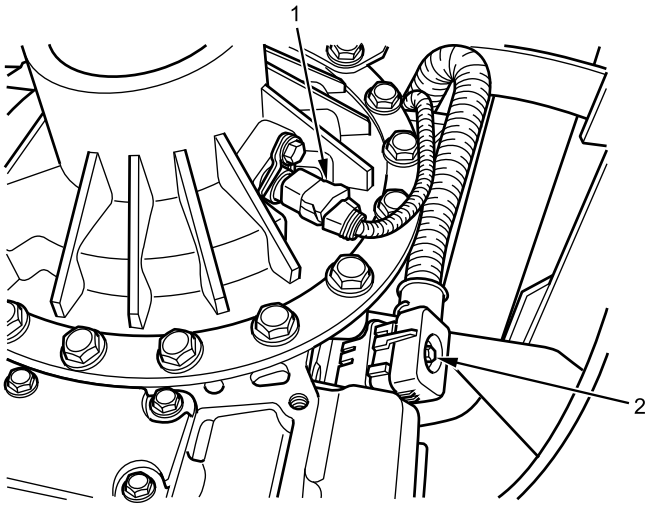

B230702567

Figure 6. Rear Transmission Electrical Connectors.

7. Disconnect main transmission electrical connector (Figure 6, Item 2). Remove lock tab and disconnect output speed sensor connector (Figure 6, Item 1).

TRANSMISSION ASSEMBLY REMOVAL AND INSTALLATION - (CONTINUED)

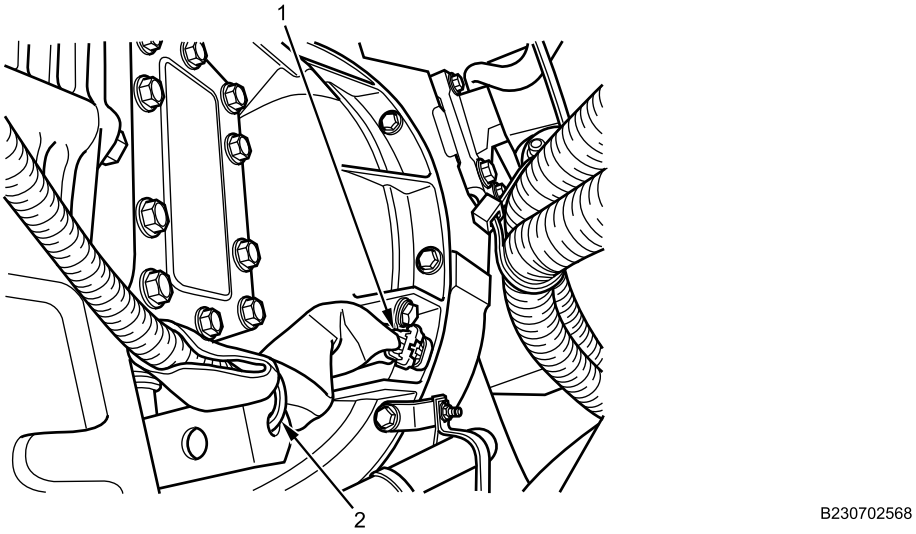

Figure 7. Input Speed Sensor.

8. Remove lock tab and disconnect input speed sensor connector (Figure 7, Item 1).
9. Remove and discard cable lock strap (Figure 7, Item 2).

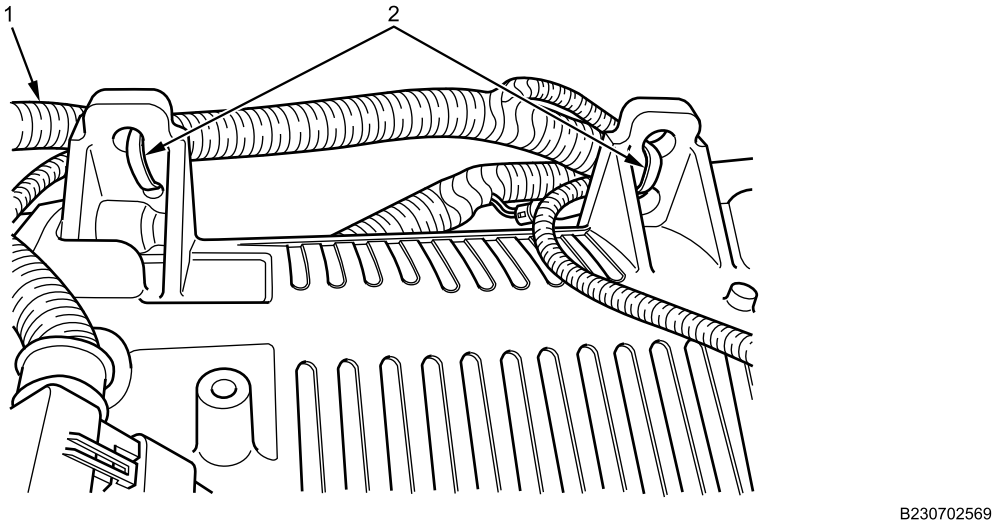

Figure 8. Harness.

10. Remove and discard cable lock straps (Figure 8, Item 2) securing harness (Figure 8, Item 1) to transmission.

TRANSMISSION ASSEMBLY REMOVAL AND INSTALLATION - (CONTINUED)

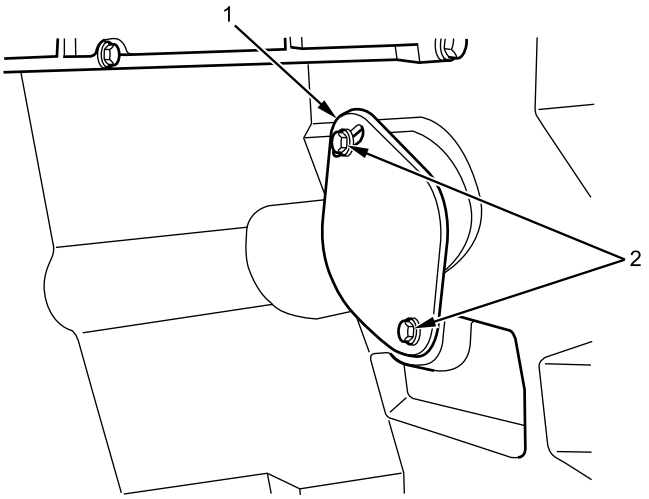

B230702594

Figure 9. Access Cover.

11. Remove two bolts (Figure 9, Item 2) from access cover (Figure 9, Item 1).

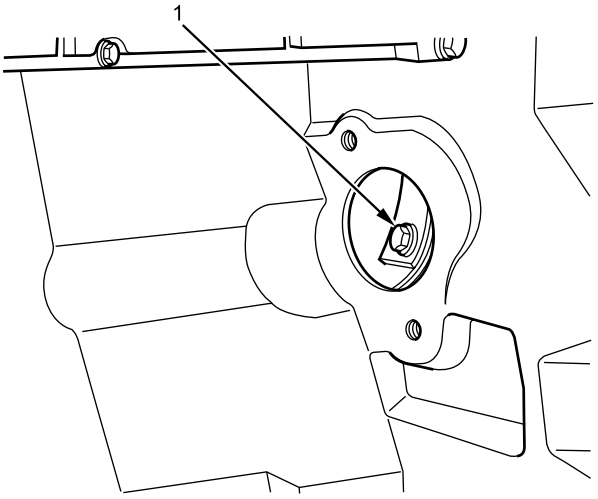

B230702598

Figure 10. Converter Bolts.

12. Remove six torque converter-to-flywheel bolts (Figure 10, Item 1). Have maintainer rotate engine with engine cooling fan to locate bolts.
13. Position transmission jack under transmission.

TRANSMISSION ASSEMBLY REMOVAL AND INSTALLATION - (CONTINUED)

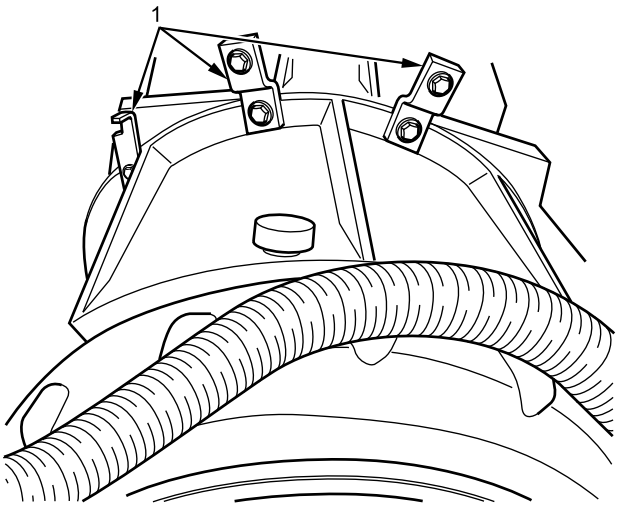

B230702578

Figure 11. Transmission-to-Engine Bolts.

14. Remove 12 engine-to-transmission bolts. Note position of all brackets (Figure 11, Item 1).

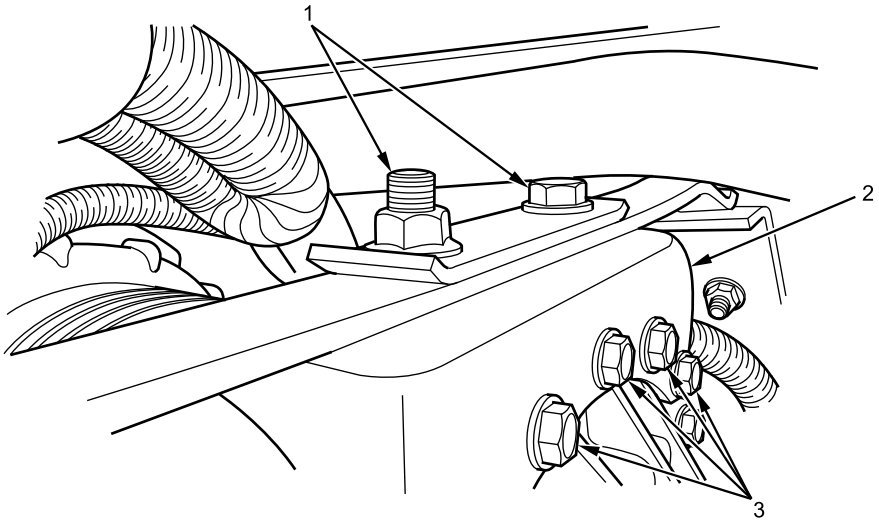

B230702576

Figure 12. Upper Transmission Mount.

15. Remove two nuts and bolts (Figure 12, Item 1) securing upper mount (Figure 12, Item 2) to crossmember.
16. Remove five bolts (Figure 12, Item 3) securing mount (Figure 12, Item 2) to transmission and remove mount.

CAUTION

TRANSMISSION ASSEMBLY REMOVAL AND INSTALLATION - (CONTINUED)

Take care not to bend dipstick tube when removing it from transmission, or damage may result.

Take care to avoid catching and pulling harness when removing transmission, or damage may result.

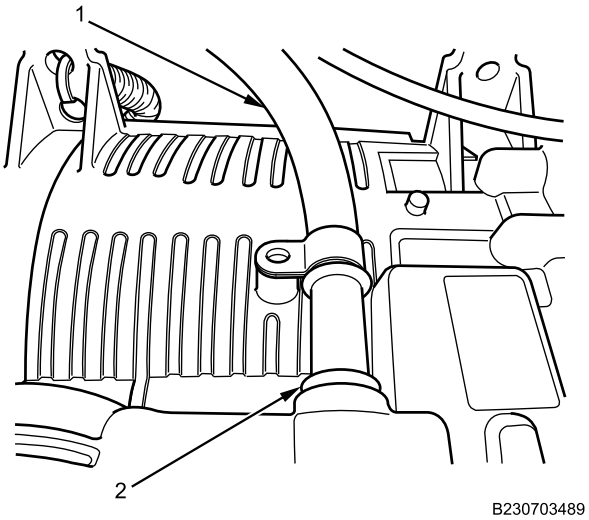

Figure 13. Dipstick Tube and Seal.

17. Remove end of dipstick tube (Figure 13, Item 1) from transmission. Remove and discard dipstick tube seal (Figure 13, Item 2).
18. With help from assistant, pull transmission rearward until transmission clears engine and dipstick tube. Reposition dipstick tube as necessary to obtain clearance. Lower transmission to ground.
19. Remove dipstick tube from vehicle.

END OF TASK

TRANSMISSION ASSEMBLY REMOVAL AND INSTALLATION - (CONTINUED)

DISASSEMBLY

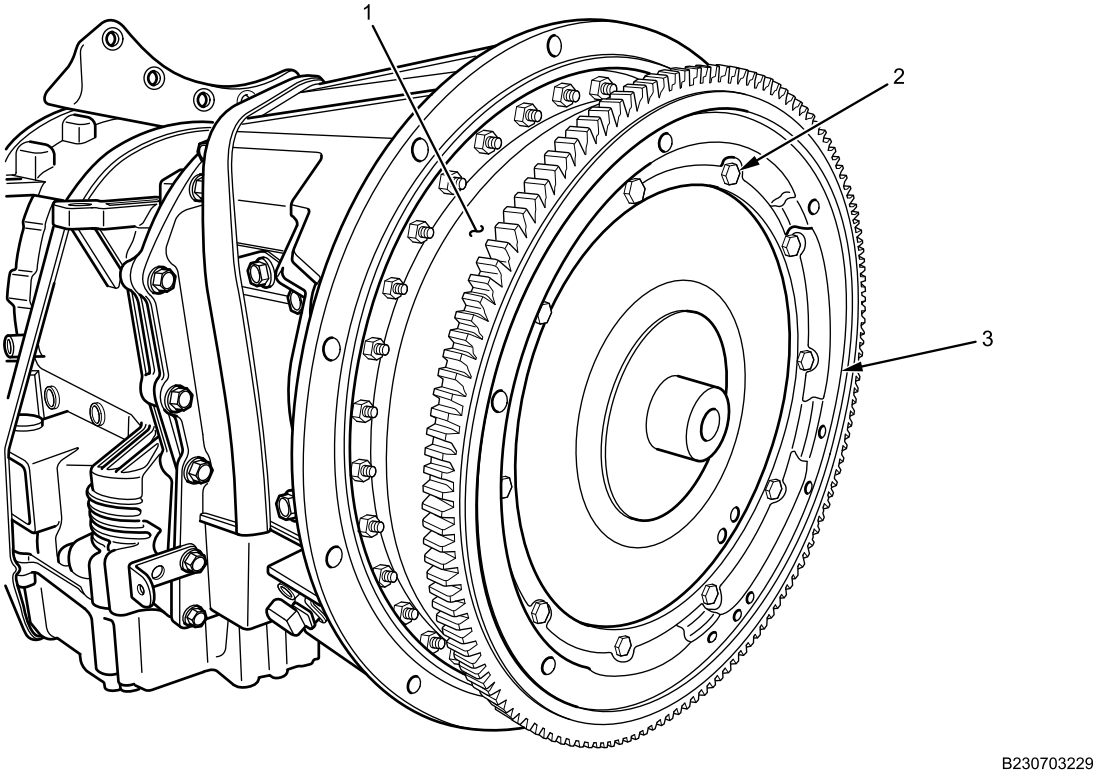

Figure 14. Starter Ring Removal.

1. Remove 10 bolts (Figure 14, Item 2) and starter ring (Figure 14, Item 3) from torque converter (Figure 14, Item 1).

TRANSMISSION ASSEMBLY REMOVAL AND INSTALLATION - (CONTINUED)

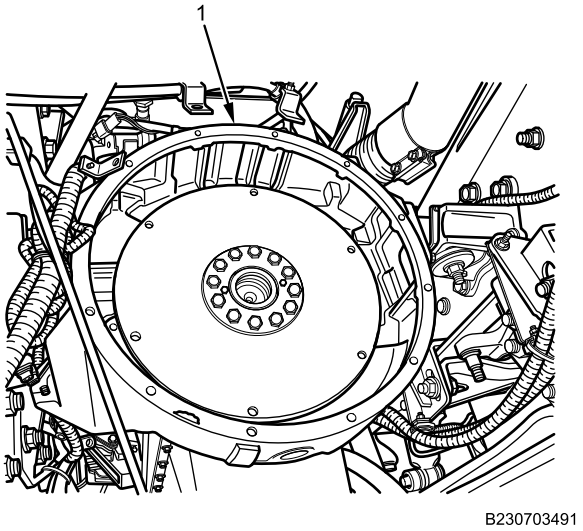

Figure 15. Transmission-to-Engine Mating Surface (Engine Shown).

2. Clean the transmission-to-engine mating surfaces (Figure 15, Item 1).

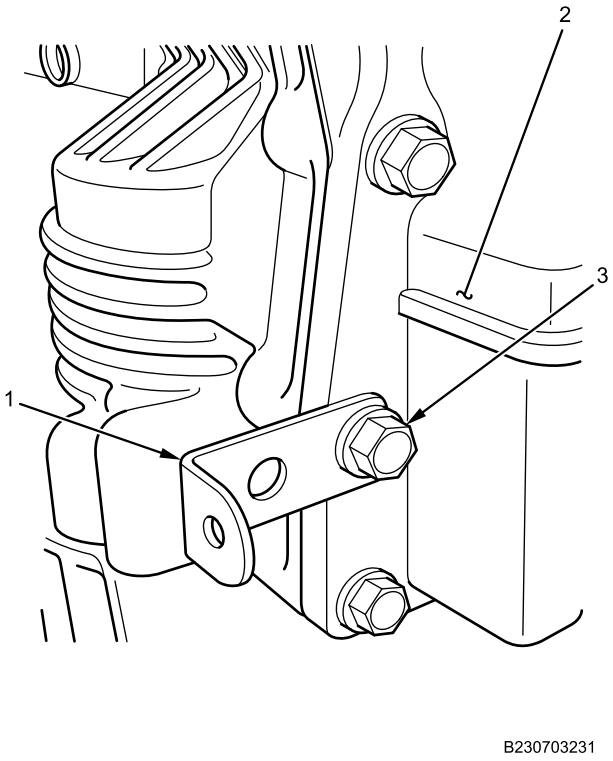

Figure 16. Bracket Removal.

3. Remove bolt (Figure 16, Item 3) and bracket (Figure 16, Item 1) from transmission (Figure 16, Item 2).

TRANSMISSION ASSEMBLY REMOVAL AND INSTALLATION - (CONTINUED)

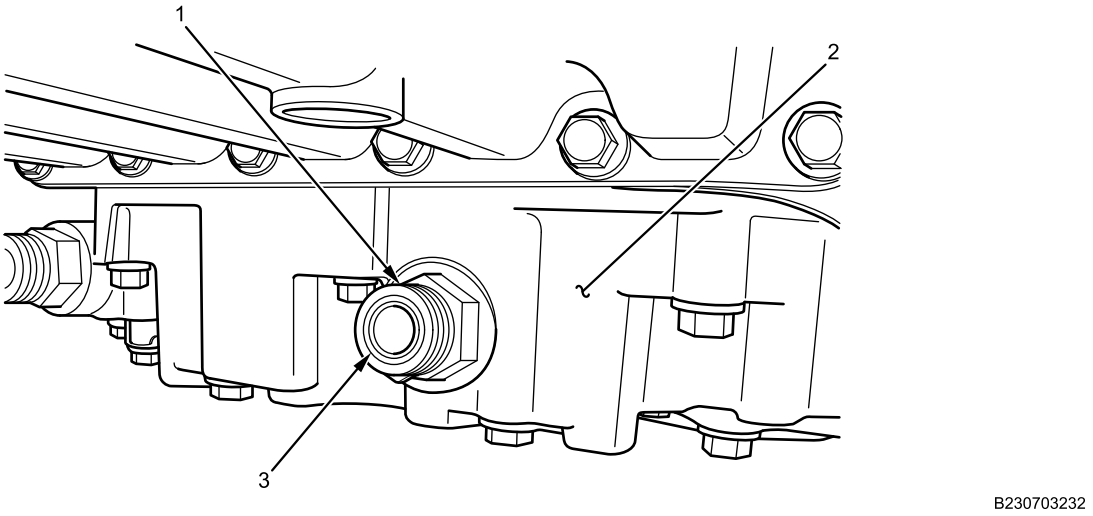

Figure 17. Hose Fittings Removal.

4. Remove two hose fittings (Figure 17, Item 1) from transmission (Figure 17, Item 2). Remove four O-rings (Figure 17, Item 3) from each end of fittings and discard O-rings.

END OF TASK

ASSEMBLY

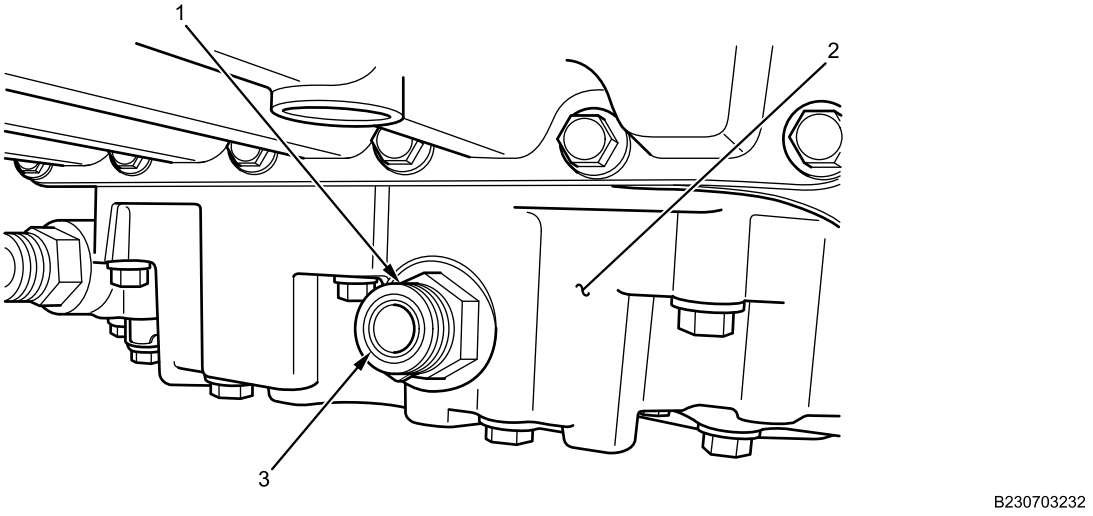

Figure 18. Hose Fitting Installation.

1. Install four new O-rings (Figure 18, Item 3) to each end of transmission hose fittings and install two hose fittings (Figure 18, Item 1) to transmission (Figure 18, Item 2).

TRANSMISSION ASSEMBLY REMOVAL AND INSTALLATION - (CONTINUED)

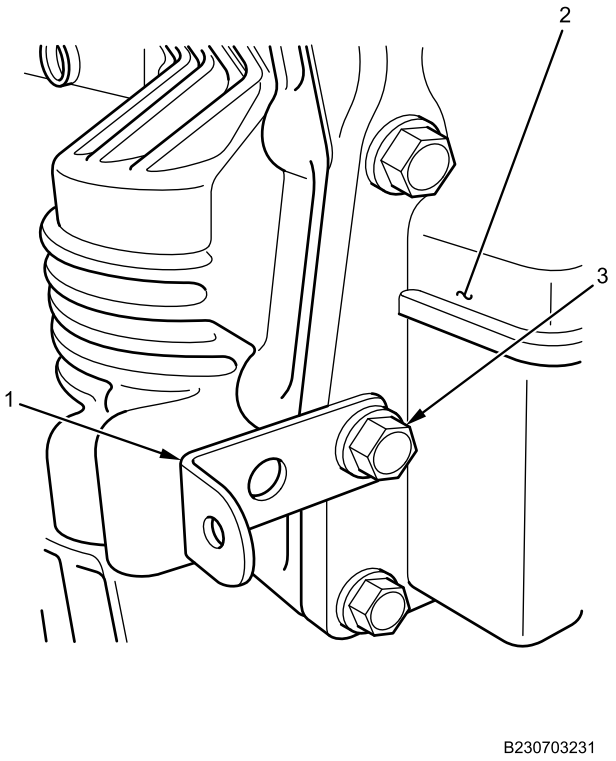

Figure 19. Bracket Installation.

2. Install bracket (Figure 19, Item 1) on transmission (Figure 19, Item 2) with bolt (Figure 19, Item 3).

TRANSMISSION ASSEMBLY REMOVAL AND INSTALLATION - (CONTINUED)

WARNING

Antiseize compound can cause skin, eye, and respiratory irritation. Inhalation can cause difficulty breathing, dizziness, headache, and nausea. Wear eye protection and use only with adequate ventilation. Do not use near heat, sparks, or open flame. Wash hands and eyes after using compound. In case of skin contact, wash affected area with soap and water, and seek medical attention if irritation persists. If compound contacts eyes, flush eyes with water for at least 15 minutes, and obtain medical attention if irritation persists. In case of accidental ingestion, do not induce vomiting. Slowly drink 1-2 glasses of water or milk, and seek medical attention. Store compound in a closed container away from heat. Dispose of it in accordance with standard operating procedures. Failure to comply may result in injury to personnel.

3. Install starter ring (Figure 20, Item 2) to torque converter with 10 bolts (Figure 20, Item 1). Torque bolts to 21-35 lb-ft (28-47 N•m).

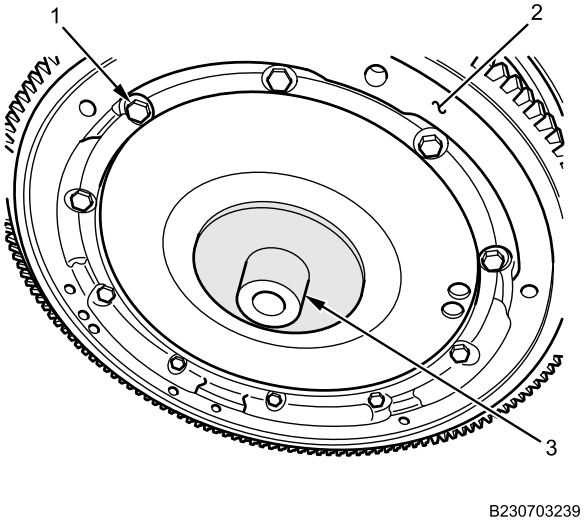

Figure 20. Starter Ring Installation.

4. Apply antiseize compound to pilot (Figure 20, Item 3).

END OF TASK

INSTALLATION

CAUTION

If transmission is being replaced, drain transmission lines and cooler of contaminated transmission fluid, or transmission damage may result.

1. Position transmission securely on transmission jack.
2. Position dipstick tube in vehicle allowing clearance for transmission installation.

TRANSMISSION ASSEMBLY REMOVAL AND INSTALLATION - (CONTINUED)

WARNING

Use caution when installing transmission. Pulling or pushing transmission too fast may offset transmission adapter plate and belly armor pan, causing transmission jack to tip or belly armor pan to fall off. Failure to comply may result in damage to equipment and serious injury or death to personnel.

NOTE

Minimal force is needed to seat transmission squarely against the engine flywheel housing. If transmission does not align to flywheel housing easily, pull transmission back and look for obstructions.

3. With help from assistant, position transmission to engine and push transmission forward until flush with back of engine.

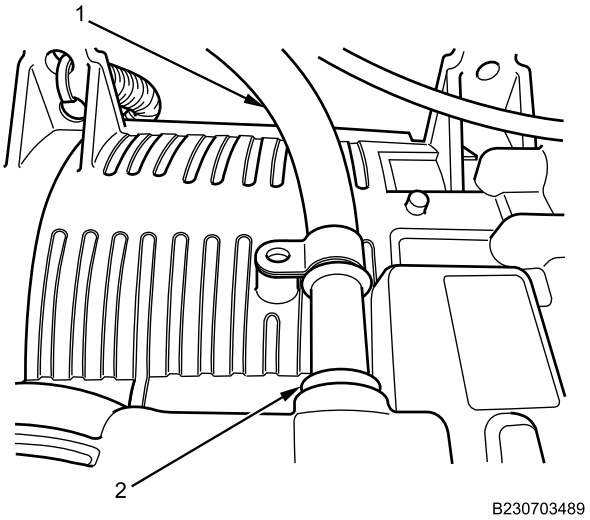

Figure 21. Dipstick Tube and Seal.

4. Install new dipstick tube seal (Figure 21, Item 2) into transmission.
5. Push dipstick tube (Figure 21, Item 1) into transmission.

TRANSMISSION ASSEMBLY REMOVAL AND INSTALLATION - (CONTINUED)

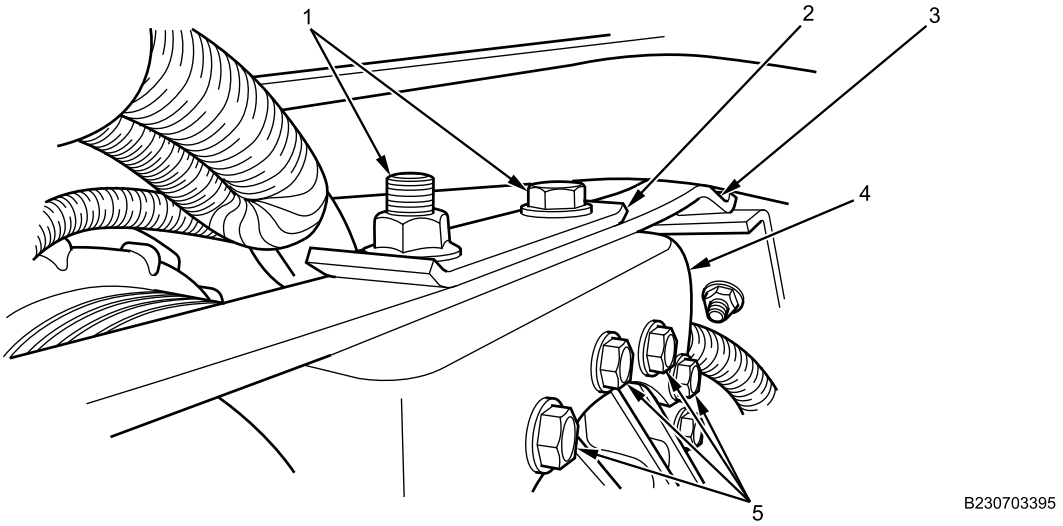

Figure 22. Upper Transmission Mount.

6. Position plate (Figure 22, Item 2) and two bolts (Figure 22, Item 1) on crossmember (Figure 22, Item 3).
7. Install five bolts (Figure 22, Item 5) securing mount (Figure 22, Item 4) to transmission and tighten securely.

TRANSMISSION ASSEMBLY REMOVAL AND INSTALLATION - (CONTINUED)

8. Install two nuts (Figure 22, Item 1) securing upper mount (Figure 22, Item 4) to crossmember and tighten securely.

WARNING

Corrosion preventive compound is toxic. Use only in well-ventilated area. Do not get in eyes; wear chemical safety goggles and full-face shield when using. Avoid contact with skin and wear rubber or plastic, solvent-resistant gloves. In case of contact, remove contaminated clothing and immediately wash area with soap and water. If compound contacts eyes, flush eyes with large amounts of water for at least 15 minutes and get immediate medical attention. If swallowed, do not induce vomiting; contact a physician immediately. Failure to comply may result in serious injury or death to personnel.

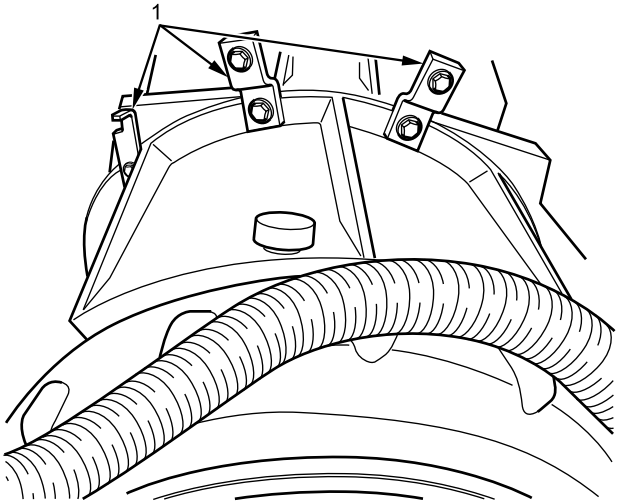

B230702578

Figure 23. Transmission-to-Engine Bolts.

9. Apply corrosion preventive compound to all transmission-to-engine bellhousing bolts.
10. Install brackets for wiring harness in position noted during removal with transmission-to-engine bellhousing bolts. Finger-tighten bolts.
11. Install the rest of the transmission-to-engine bellhousing bolts (Figure 23, Item 1) finger-tight. Torque all bolts to 38-45 ft lb (51-61 N•m).
12. Remove transmission jack from transmission.

TRANSMISSION ASSEMBLY REMOVAL AND INSTALLATION - (CONTINUED)

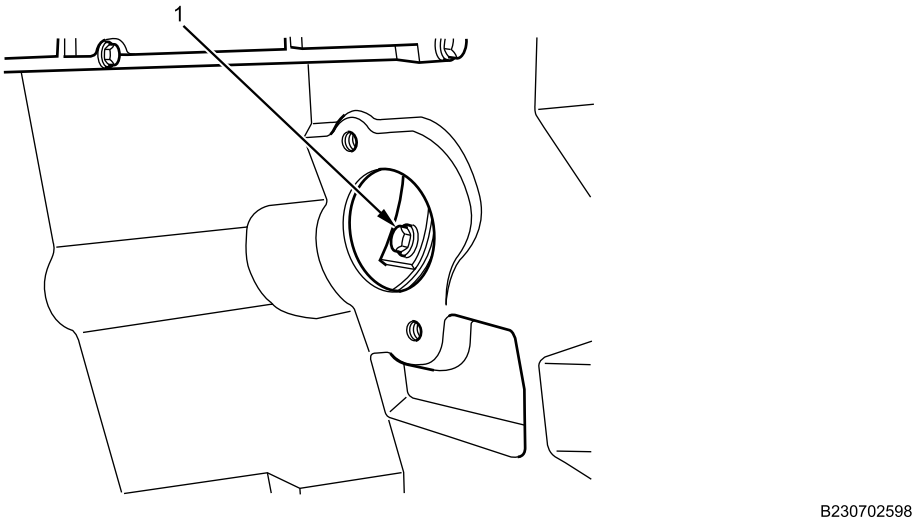

Figure 24. Converter Bolts.

13. Align bolt holes in flex plate and torque converter, and install one bolt. Rotate engine to install five remaining bolts (Figure 24, Item 1). Torque all bolts to 46-54 ft-lb (62-73 N•m).

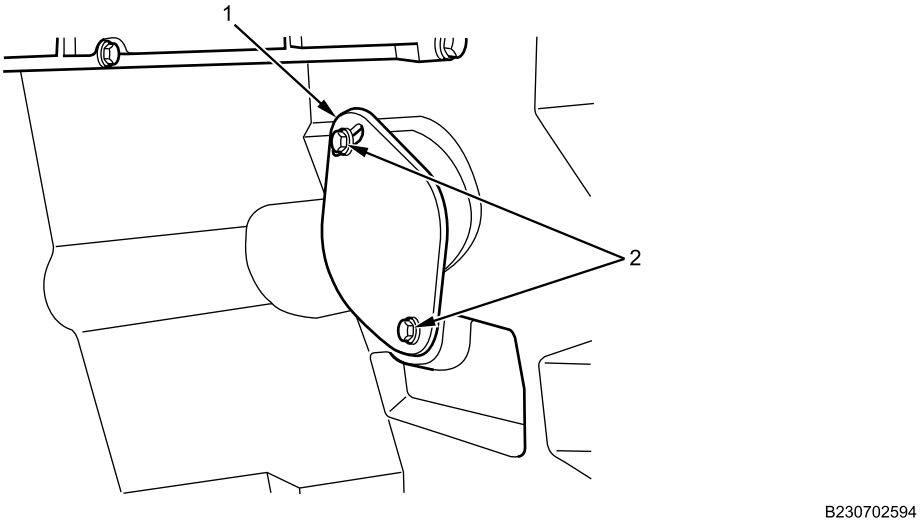

Figure 25. Access Cover.

14. Install access cover (Figure 25, Item 1) on flywheel housing with two bolts (Figure 25, Item 2) and tighten securely.

TRANSMISSION ASSEMBLY REMOVAL AND INSTALLATION - (CONTINUED)

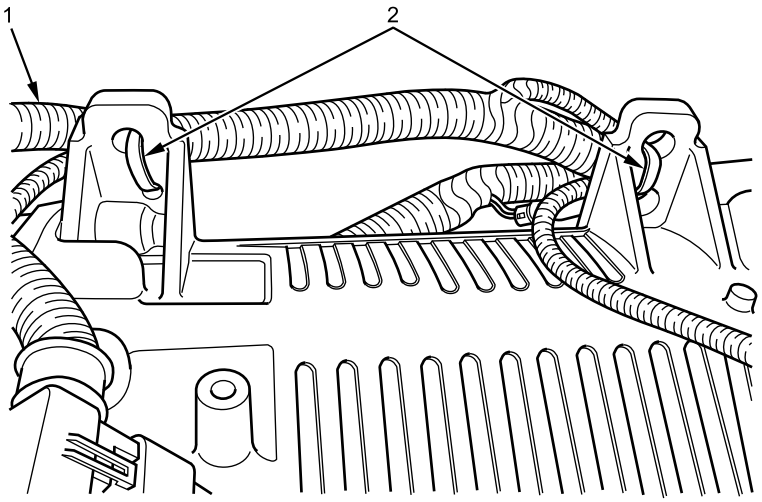

B230702569

Figure 26. Harness.

15. Install new cable lock straps (Figure 26, Item 2) to secure harness (Figure 26, Item 1) to transmission.

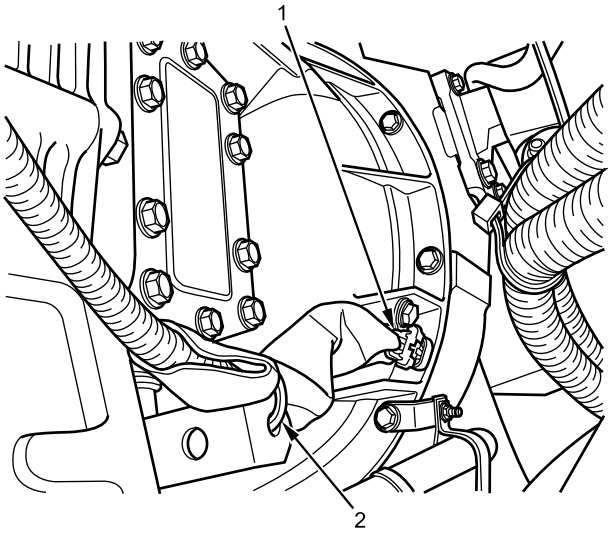

B230702568

Figure 27. Input Speed Sensor.

16. Connect input speed sensor connector (Figure 27, Item 1) and lock tab.
17. Install new cable lock strap (Figure 27, Item 2).

TRANSMISSION ASSEMBLY REMOVAL AND INSTALLATION - (CONTINUED)

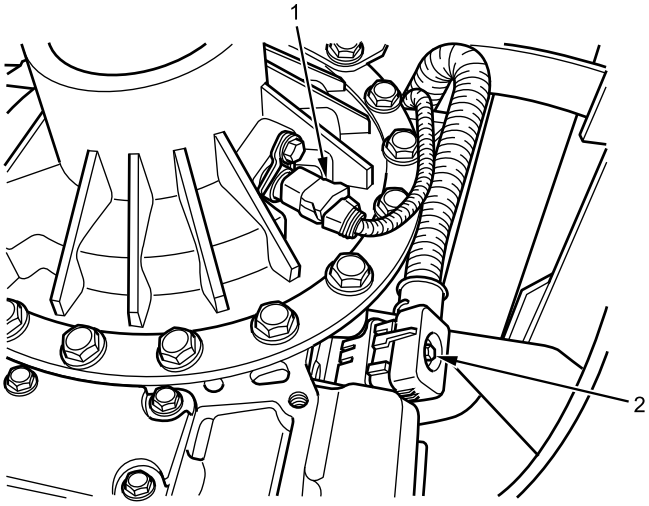

Figure 28. Rear Transmission Electrical Connectors.

18. Connect main transmission connector (Figure 28, Item 2) and torque to 24 lb-in. (2.7 N•m). Connect output speed sensor connector and lock tab (Figure 28, Item 1).

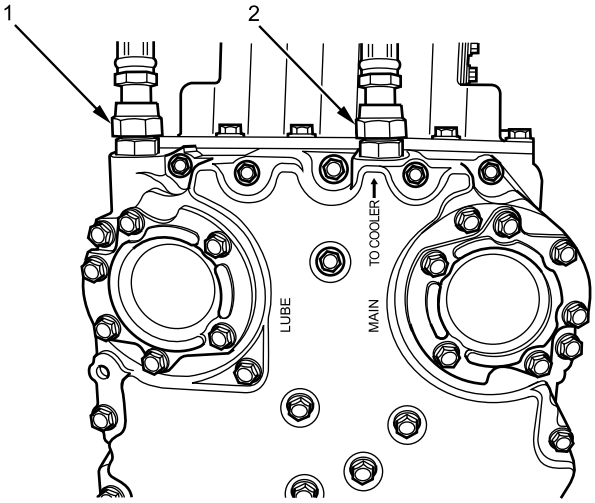

Figure 29. Cooler Hoses.

19. Install inlet hose (Figure 29, Item 1) and outlet hose (Figure 29, Item 2) on transmission.

TRANSMISSION ASSEMBLY REMOVAL AND INSTALLATION - (CONTINUED)

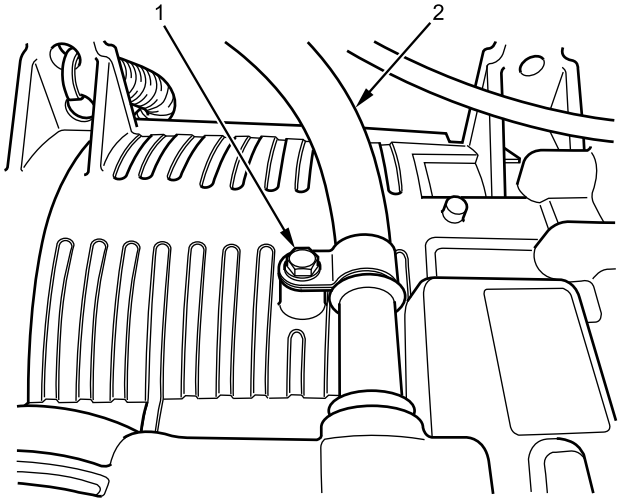

B230702570

Figure 30. Lower Retainer.

20. Install bolt (Figure 30, Item 1) securing retainer for lower dipstick tube and tighten securely.

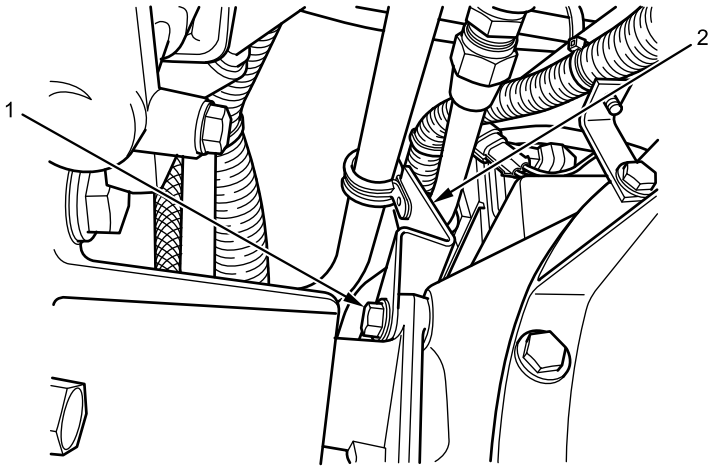

B230703227

Figure 31. Retainer Mounting Plate Installation.

21. Install retainer mounting plate (Figure 31, Item 2) on engine with two bolts (Figure 31, Item 1) and tighten securely.

TRANSMISSION ASSEMBLY REMOVAL AND INSTALLATION - (CONTINUED)

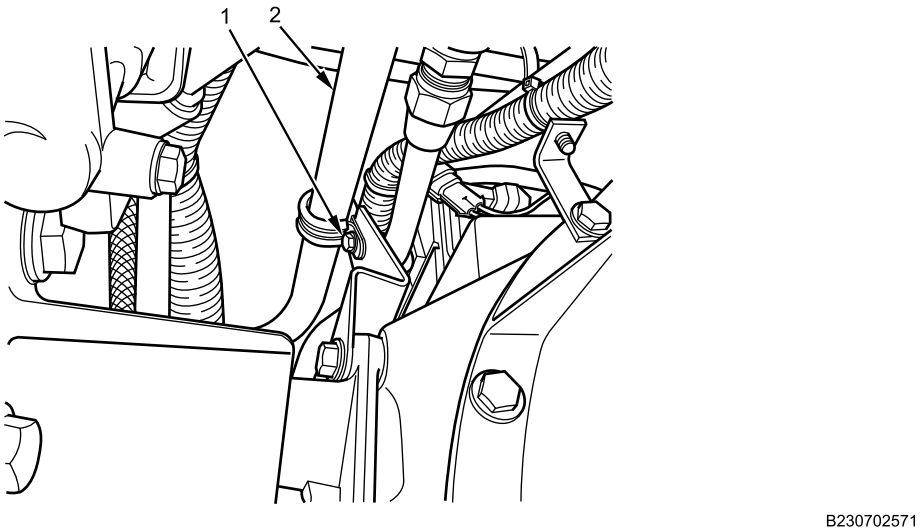

Figure 32. Upper Retainer.

22. Install bolt and nut (Figure 32, Item 1) securing upper dipstick tube retainer (Figure 32, Item 2) and tighten securely.

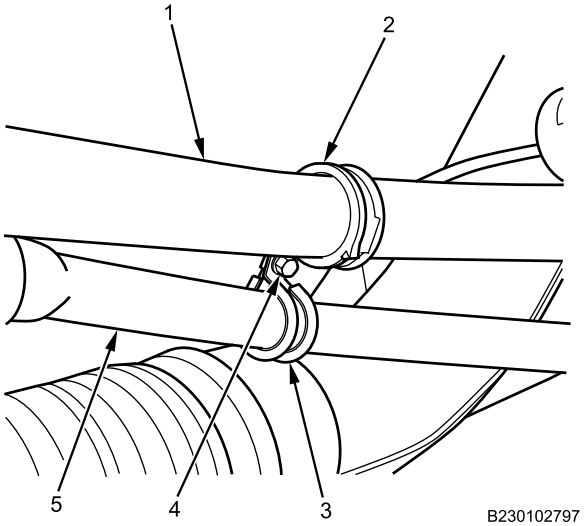

Figure 33. Oil Gauge Tube and Transmission Dipstick Retainer.

23. Position transmission dipstick tube (Figure 33, Item 5) and oil gauge tube (Figure 33, Item 1) next to each other and align retainers (Figure 33, Item 2 and 3). Fasten retainers together with bolt and nut (Figure 33, Item 4) and tighten securely.
24. Install remaining cable lock straps in locations noted during removal.

TRANSMISSION ASSEMBLY REMOVAL AND INSTALLATION - (CONTINUED)

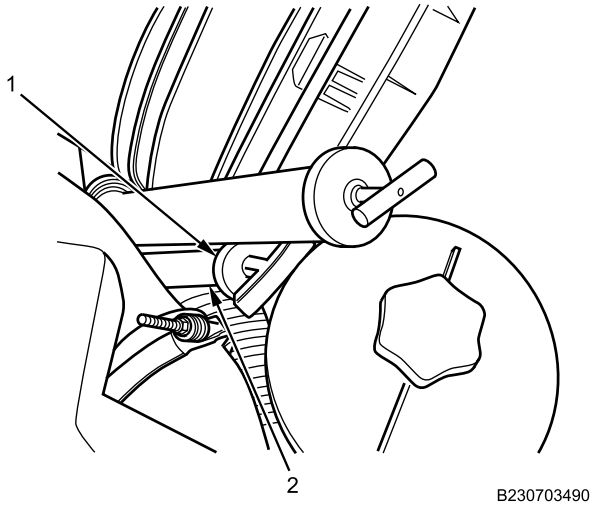

Figure 34. Transmission Dipstick.

25. Insert transmission dipstick (Figure 34, Item 1) in dipstick tube (Figure 34, Item 2).

END OF TASK

FOLLOW-ON MAINTENANCE

1. Install transmission-to-transfer case driveshaft (WP 0469).
2. Install starter (WP 0292).
3. Fill transmission fluid (TM 9-2355-106-10).
4. Install air cleaner assembly (WP 0257).
5. Start engine and check for leaks (TM 9-2355-106-10).
6. Close engine hood (TM 9-2355-106-10).
7. Remove wheel chocks (TM 9-2355-106-10).
8. Drive vehicle to verify transmission operation (TM 9-2355-106-10).
9. Shut engine off (TM 9-2355-106-10).
10. Chock wheels (TM 9-2355-106-10).
11. Install belly armor (WP 0606).
12. Remove wheel chocks (TM 9-2355-106-10).

END OF TASK

END OF WORK PACKAGE

FIELD MAINTENANCE

TRANSMISSION MOUNTING CROSSMEMBER REMOVAL AND INSTALLATION

INITIAL SETUP:

Tools and Special Tools
General Mechanic's Tool Kit (GMTK) (WP 0795, Item 37)
Socket, deep well, 1/2-inch drive, 6 pt, 15/16 inch (WP 0795, Item 98)
Jack, transmission (WP 0795, Item 61)

Materials/Parts
Cable, lock strap (WP 0796, Item 124)
Compound (WP 0794, Item 13)

References
TM 9-2355-106-10
TM 9-2355-106-23P
WP 0786
WP 0782

Equipment Condition
Parking brake set (TM 9-2355-106-10)
Transmission set in NEUTRAL (N) (TM 9-2355-106-10)
Engine off (TM 9-2355-106-10)
MAIN POWER switch off (TM 9-2355-106-10)
Wheels chocked (TM 9-2355-106-10)
Belly armor removed (WP 0606)

REMOVAL

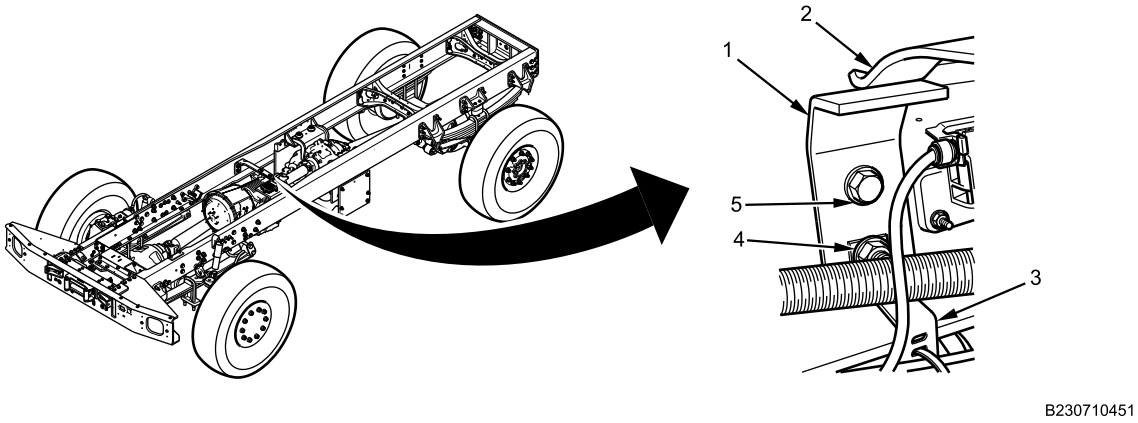

Figure 1. Transmission Rear Mount Frame Bracket.

NOTE

Use suitable lifting and supporting devices under rear of transmission to relieve tension of transmission rear crossmember mounting spring on transmission rear mount frame bracket.

Left side bracket shown, right side bracket similar.

1. Remove nut (Figure 1, Item 4), bolt, and harness support bracket (Figure 1, Item 3) from transmission rear mount frame bracket (Figure 1, Item 1).
2. Remove bolt (Figure 1, Item 5) and nut from transmission rear mount frame bracket (Figure 1, Item 1). Remove frame bracket from under transmission mounting crossmember spring (Figure 1, Item 2).

TRANSMISSION MOUNTING CROSSMEMBER REMOVAL AND INSTALLATION - (CONTINUED)

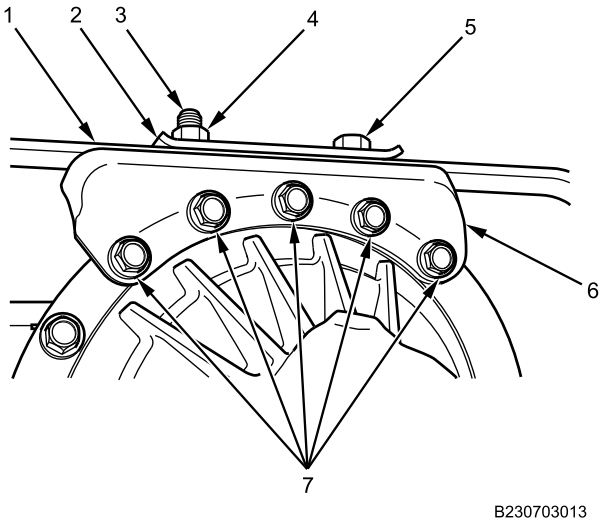

Figure 2. Transmission Mounting Crossmember Spring And Transmission Rear Mount Bracket.

3. Remove bolts (Figure 2, Item 7) from transmission rear mount bracket (Figure 2, Item 6). Remove transmission mount bracket (Figure 2, Item 6) and transmission mounting crossmember (Figure 2, Item 1).

END OF TASK

DISASSEMBLY

1. Remove nut (Figure 2, Item 4) and bolt (Figure 2, Item 3) from transmission rear mount bracket (Figure 2, Item 6), transmission mounting crossmember spring (Figure 2, Item 1), and rear crossmember plate (Figure 2, Item 2).
2. Remove bolt (Figure 2, Item 5) and nut from transmission rear mount bracket (Figure 2, Item 6), transmission mounting crossmember spring (Figure 2, Item 1), and rear crossmember plate (Figure 2, Item 2). Remove crossmember spring and plate.

END OF TASK

ASSEMBLY

WARNING

Corrosion preventive compound is toxic. Use only in well-ventilated area. Do not get in eyes; wear chemical safety goggles and full-face shield when using. Avoid contact with skin and wear rubber or plastic, solvent-resistant gloves. In case of contact, remove contaminated clothing and immediately wash area with soap and water. If compound contacts eyes, flush eyes with large amounts of water for at least 15 minutes and get immediate medical attention. If swallowed, do not induce vomiting; contact a physician immediately. Failure to comply may result in serious injury or death to personnel.

1. Apply corrosion preventive compound to bolts and nuts (Figure 3, Item 3 through 5 and 7).

TRANSMISSION MOUNTING CROSSMEMBER REMOVAL AND INSTALLATION - (CONTINUED)

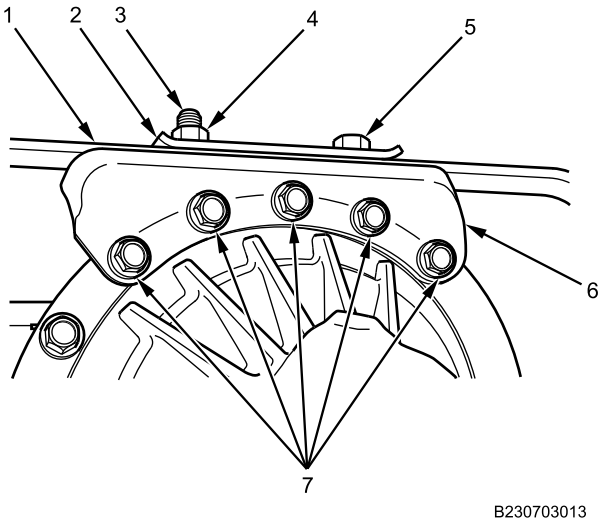

Figure 3. Transmission Mounting Crossmember Spring And Transmission Rear Mount Bracket.

2. Position crossmember spring (Figure 3, Item 1) and plate (Figure 3, Item 2) on bracket (Figure 3, Item 6) and loosely install bolt (Figure 3, Item 5) and nut.
3. Loosely install nut (Figure 3, Item 4) and bolt (Figure 3, Item 3) on bracket (Figure 3, Item 6), crossmember spring (Figure 3, Item 1), and plate (Figure 3, Item 2).

END OF TASK

INSTALLATION

1. Install transmission mount bracket (Figure 3, Item 6) and transmission mounting crossmember (Figure 3, Item 1) on vehicle.
2. Install transmission mount bracket (Figure 3, Item 6) and bolts (Figure 3, Item 7) on transmission. Tighten bolts securely.

WARNING

Corrosion preventive compound is toxic. Use only in well-ventilated area. Do not get in eyes; wear chemical safety goggles and full-face shield when using. Avoid contact with skin and wear rubber or plastic, solvent-resistant gloves. In case of contact, remove contaminated clothing and immediately wash area with soap and water. If compound contacts eyes, flush eyes with large amounts of water for at least 15 minutes and get immediate medical attention. If swallowed, do not induce vomiting; contact a physician immediately. Failure to comply may result in serious injury or death to personnel.

3. Apply corrosion preventive compound to bolts and nuts (Figure 4, Item 4 and 5).

TRANSMISSION MOUNTING CROSSMEMBER REMOVAL AND INSTALLATION - (CONTINUED)

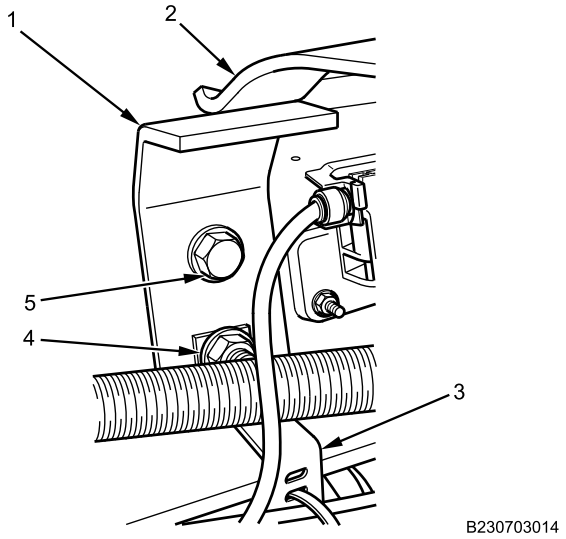

Figure 4. Transmission Rear Mount Frame Bracket.

4. Loosely install bolt (Figure 4, Item 5) and nut on frame bracket (Figure 4, Item 1).
5. Install harness support bracket (Figure 4, Item 3) and nut (Figure 4, Item 4) on frame bracket (Figure 4, Item 1). Tighten frame bracket bolts and nuts securely.
6. Align transmission mounting crossmember spring (Figure 4, Item 2) over right and left side frame brackets (Figure 4, Item 1).
7. Tighten bolts and nuts (Figure 3, Item 3 through 5) securely.

END OF TASK

FOLLOW-ON MAINTENANCE

1. Turn MAIN POWER switch on (TM 9-2355-106-10).
2. Remove wheel chocks (TM 9-2355-106-10).
3. Test-drive vehicle to verify transmission mounting crossmember operation (TM 9-2355-106-10).
4. Set transmission in NEUTRAL (N) (TM 9-2355-106-10).
5. Set vehicle parking brake (TM 9-2355-106-10).
6. Turn engine off (TM 9-2355-106-10).
7. Turn MAIN POWER switch off (TM 9-2355-106-10).
8. Install belly armor (WP 0606).

END OF TASK

END OF WORK PACKAGE

FIELD MAINTENANCE

TRANSMISSION COOLER HOSE REMOVAL AND INSTALLATION

INITIAL SETUP:

Tools and Special Tools
General Mechanic's Tool Kit (GMTK) (WP 0795, Item 37)
Wrench, combination, 1-1/4 inch (WP 0795, Item 133)
Wrench, combination, 1-3/8 inch (WP 0795, Item 134)
Pan, drain, 5-gal. capacity, (WP 0795, Item 75)

Materials/Parts
Lubricating oil, (WP 0794, Item 27)
Cable lock straps - (5) (WP 0796, Item 134)
Wire tags (WP 0794, Item 33)
O-ring - (4) (WP 0796, Item 181)

References
TM 9-2355-106-10
TM 9-2355-106-23P
WP 0786
WP 0782

Equipment Condition
Parking brake set (TM 92355-106-10)
Transmission set in NEUTRAL (N) (TM 92355-106-10)
Engine off (TM 92355-106-10)
MAIN POWER switch off (TM 92355-106-10)
Wheels chocked (TM 92355-106-10)
Belly armor removed (WP 0606)
Right side engine armor removed (WP 0599)
Engine hood opened and secured (TM 92355-106-10)

WARNING

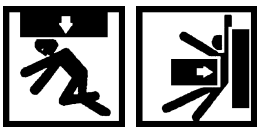

Engine hood is extremely heavy and requires two-person lift. Ensure that there is adequate space in front of the vehicle to open hood completely without pinning or pinching personnel between hood and any other structure. Use extreme care when working under hood and make sure it is properly supported. Failure to comply may result in serious injury or death to personnel.

TRANSMISSION COOLER HOSE REMOVAL AND INSTALLATION - (CONTINUED)

REMOVAL

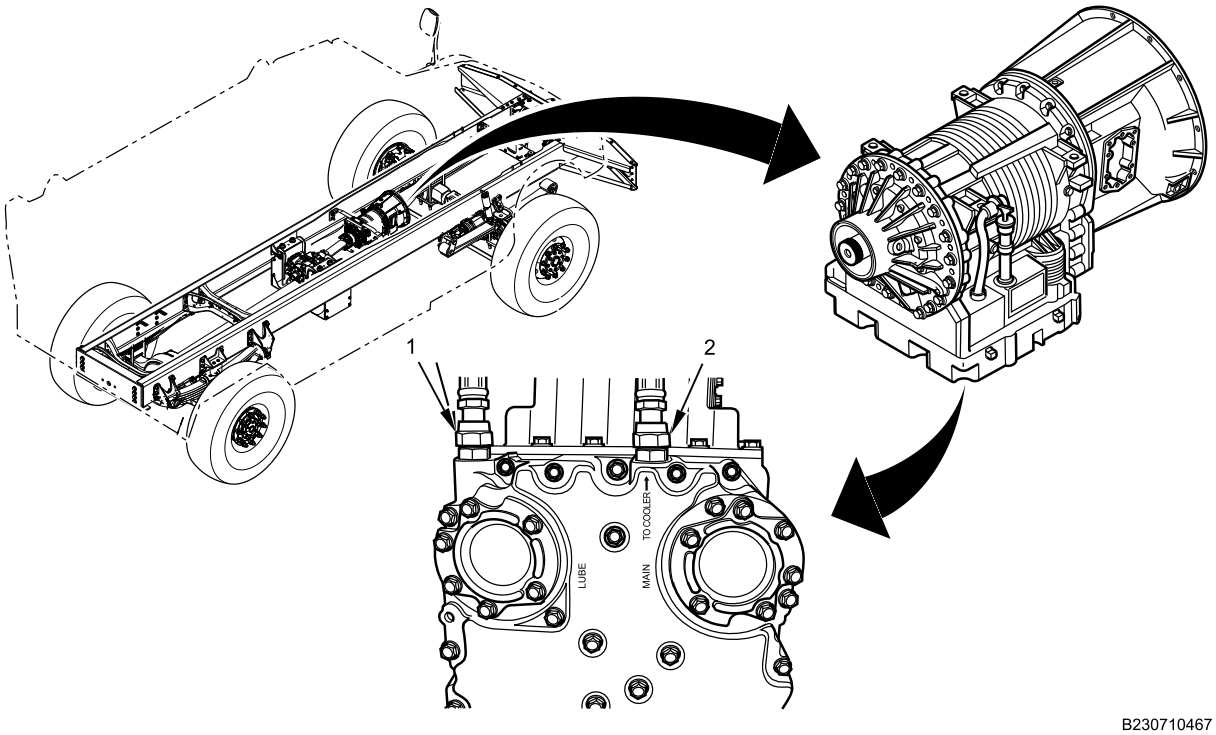

Figure 1. Lower Hoses.

1. Position drain pan under transmission.

NOTE

Remove transmission end first so hoses will drain into drain pan.

2. Remove inlet hose (Figure 1, Item 1) and outlet hose (Figure 1, Item 2) from transmission. Remove and discard O-rings.

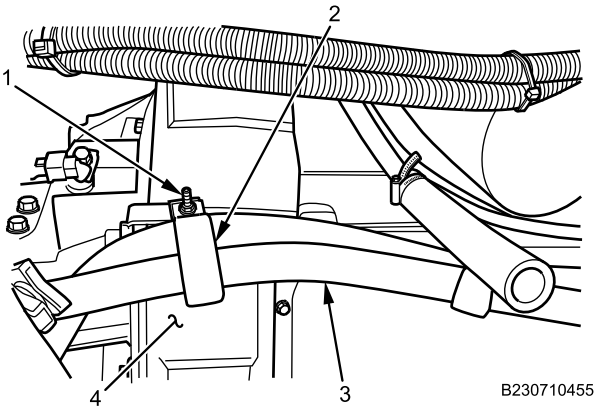

Figure 2. Flywheel Housing Retainer.

TRANSMISSION COOLER HOSE REMOVAL AND INSTALLATION - (CONTINUED)

3. Remove nut (Figure 2, Item 1) and retainer (Figure 2, Item 2) securing cooler hoses (Figure 2, Item 3) to flywheel housing (Figure 2, Item 4).

Figure 3. Lower Retainers.

4. Remove retainers (Figure 3, Item 2 and 3) securing hose (Figure 3, Item 1) to oil pan.

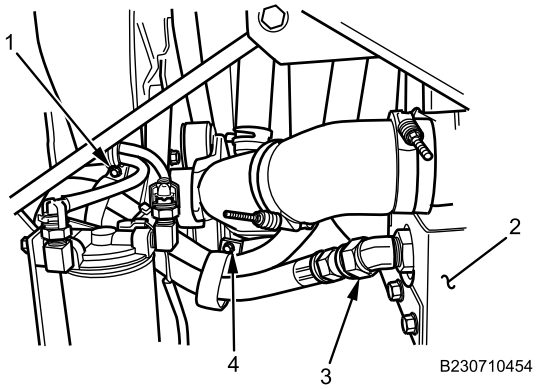

Figure 4. Upper Retainer and Hose.

5. Remove transmission cooler hose bracket bolt (Figure 4, Item 1).
6. Remove upper retainer nut (Figure 4, Item 4) near radiator (Figure 4, Item 2).
7. Remove fitting (Figure 4, Item 3) securing lower cooler hose to radiator (Figure 4, Item 2). Remove and discard O-ring.

TRANSMISSION COOLER HOSE REMOVAL AND INSTALLATION - (CONTINUED)

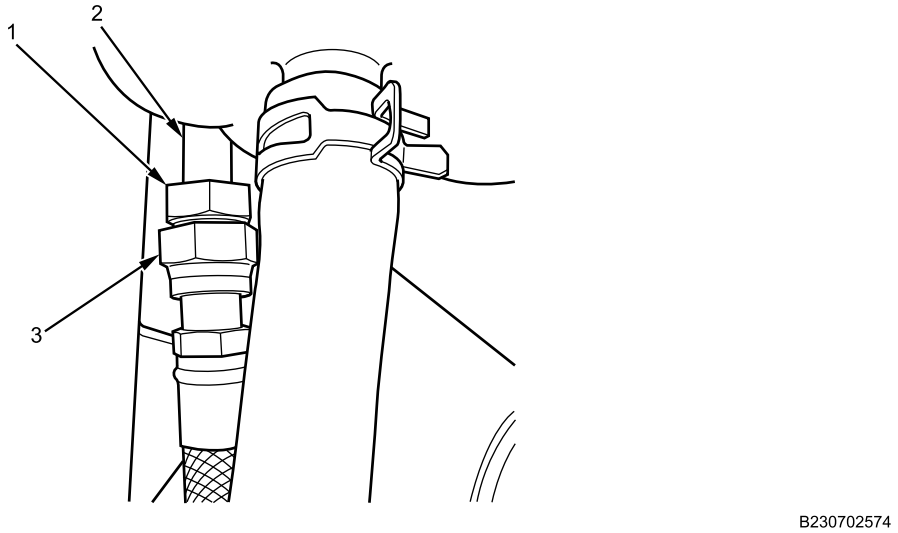

Figure 5. Upper Hose.

8. Hold fitting (Figure 5, Item 1) on cooler tube (Figure 5, Item 2) and remove fitting (Figure 5, Item 3) securing upper hose. Remove and discard O-ring.

NOTE

Note location of cable lock straps.

9. Cut and discard cable lock straps as necessary and remove hoses from vehicle.

END OF TASK

TRANSMISSION COOLER HOSE REMOVAL AND INSTALLATION - (CONTINUED)

INSTALLATION

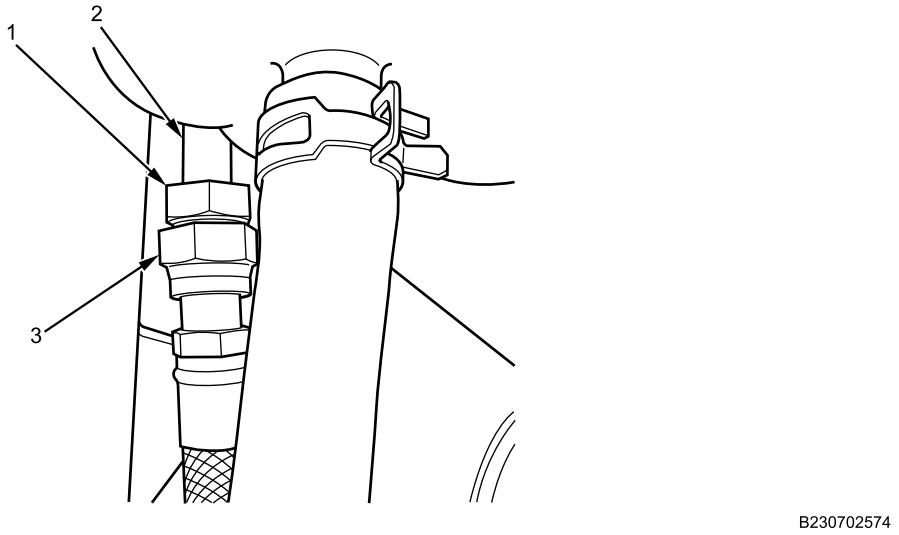

Figure 6. Upper Hose.

1. Install new O-ring on fitting (Figure 6, Item 1).
2. Hold fitting (Figure 6, Item 1) on cooler tube (Figure 6, Item 2). Install fitting (Figure 6, Item 3) securing upper hose to tube. Tighten securely.

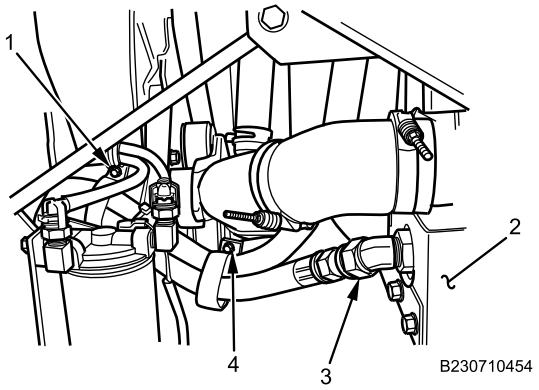

Figure 7. Upper Retainer and Lower Hose.

3. Install new O-ring.
4. Install nut (Figure 7, Item 3) securing lower hose to radiator (Figure 7, Item 2).
5. Install upper retainer (Figure 7, Item 4) near radiator (Figure 7, Item 2).
6. Install transmission cooler hose bracket and bolt (Figure 7, Item 1) on alternator bracket.

TRANSMISSION COOLER HOSE REMOVAL AND INSTALLATION - (CONTINUED)

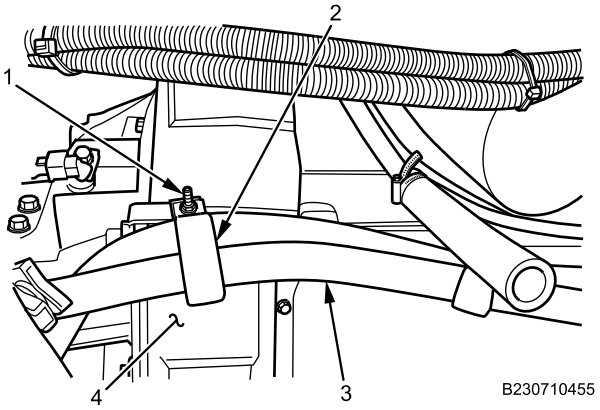

Figure 8. Flywheel Housing Retainer.

7. Install transmission cooler hose (Figure 8, Item 3), bracket (Figure 8, Item 2), and nut (Figure 8, Item 1) on flywheel housing (Figure 8, Item 4).

Figure 9. Lower Retainers.

8. Install retainers (Figure 9, Item 2 and 3) securing hose (Figure 9, Item 1) to oil pan.

TRANSMISSION COOLER HOSE REMOVAL AND INSTALLATION - (CONTINUED)

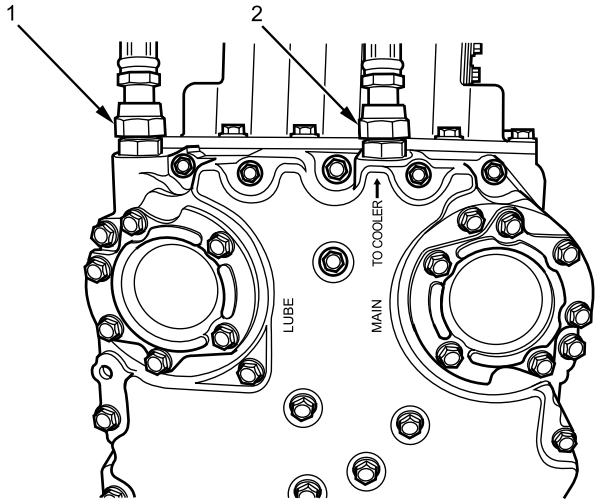

B230702575

Figure 10. Lower Hoses.

9. Install new O-rings on cooler inlet hose (Figure 10, Item 1) and outlet hose (Figure 10, Item 2).
10. Install inlet hose (Figure 10, Item 1) and outlet hose (Figure 10, Item 2) on transmission and tighten securely.
11. Remove drain pan.
12. Install new cable lock straps in locations noted during removal.

END OF TASK

FOLLOW-ON MAINTENANCE

1. Fill transmission fluid as necessary (TM 92355-106-10).
2. Install belly armor (WP 0606).
3. Install right side engine armor (WP 0599).
4. Close engine hood (TM 92355-106-10).
5. Remove wheel chocks (TM 92355-106-10).

END OF TASK

END OF WORK PACKAGE

FIELD MAINTENANCE

TRANSMISSION FLUID AND FILTER REMOVAL AND INSTALLATION

INITIAL SETUP:

Tools and Special Tools
General Mechanic's Tool Kit (GMTK) (WP 0795, Item 37)
Gloves (WP 0796, Item 38)
Pan, drain, 5-gal. capacity (WP 0795, Item 75)
Socket, socket wrench, universal, 3/8-inch drive, 6 pt, 15 mm (WP 0795, Item 42)
Wrench, torque, click, ratcheting, 3/8-inch drive, 20-100 lb-ft (WP 0795, Item 141)

Materials/Parts
Goggles, industrial (WP 0794, Item 20)
Lubricating oil, (WP 0794, Item 27)
Rags (WP 0794, Item 39)
Filter parts kit, fluid pressure (WP 0796, Item 32)

References
TM 9-2355-106-10
TM 9-2355-106-23P
WP 0786
WP 0782

Equipment Condition
Parking brake set (TM 9-2355-106-10)
Transmission set in NEUTRAL (N) (TM 9-2355-106-10)
Engine off (TM 9-2355-106-10)
MAIN POWER switch off (TM 9-2355-106-10)
Wheels chocked (TM 9-2355-106-10)
Belly armor removed (WP 0606)
Engine hood opened and secured (TM 9-2355-106-10)

WARNING

Engine hood is extremely heavy and requires two-person lift. Ensure that there is adequate space in front of the vehicle to open hood completely without pinning or pinching personnel between hood and any other structure. Use extreme care when working under hood and make sure it is properly supported. Failure to comply may result in serious injury or death to personnel.

Use care when working with hot transmission and fluid during maintenance procedures. Wear protective goggles, work gloves, and long sleeves to avoid injury. Avoid contact with hot transmission oil or sump when draining transmission oil. If transmission oil temperature is above 220°F (104°C), allow transmission oil to cool before removing dipstick. Failure to comply may result in serious injury or death to personnel.

TRANSMISSION FLUID AND FILTER REMOVAL AND INSTALLATION - (CONTINUED)

REMOVAL

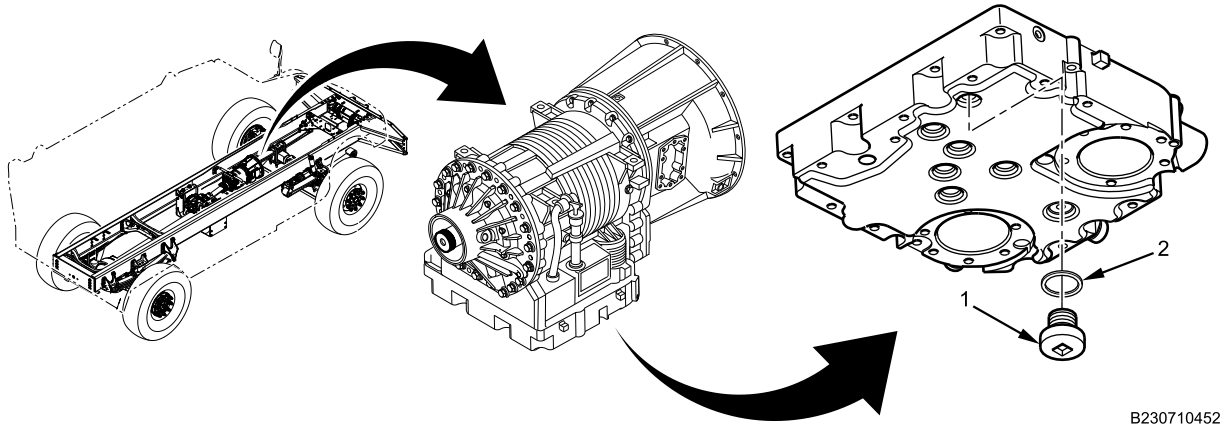

Figure 1. Drain Plug.

1. Remove drain plug (Figure 1, Item 1) and O-ring (Figure 1, Item 2) from transmission. Discard O-ring.
2. Position drain pan under transmission.
3. Allow fluid to drain from transmission.
4. Install new O-ring (Figure 1, Item 2) on drain plug. Install drain plug (Figure 1, Item 1) on transmission. Tighten to 18-25 lb-ft (24-34 N•m).

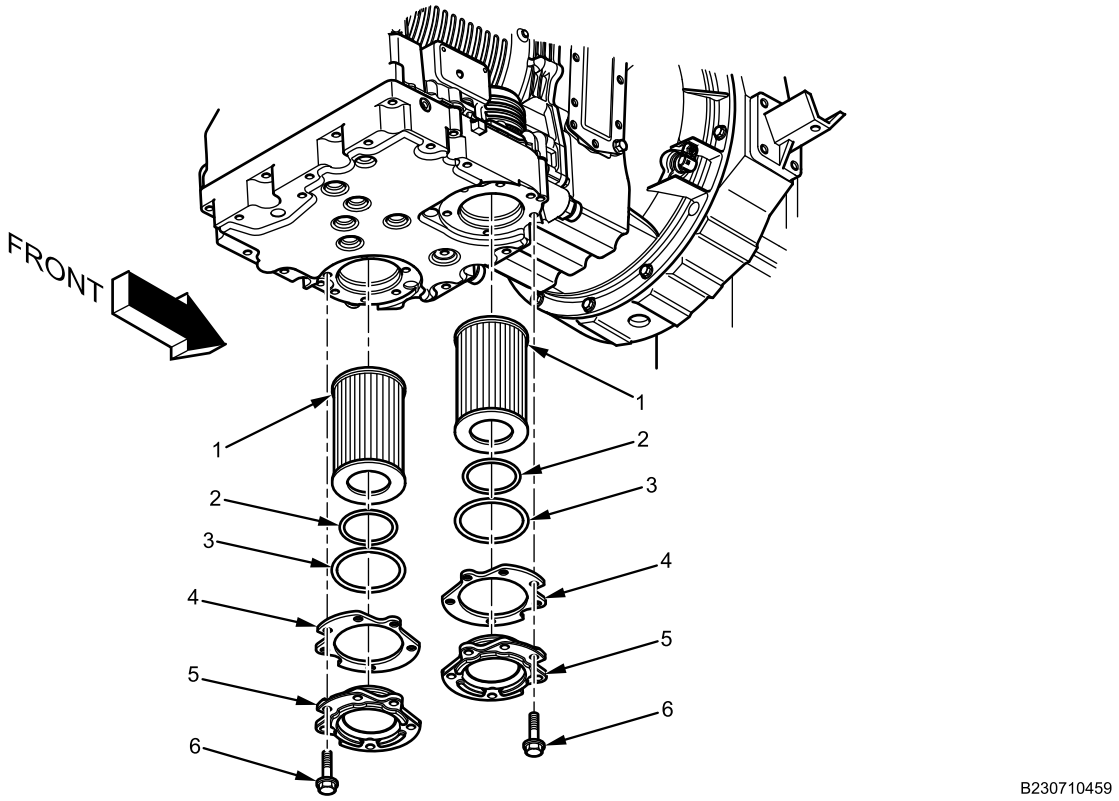

Figure 2. Filter and Seals.

TRANSMISSION FLUID AND FILTER REMOVAL AND INSTALLATION - (CONTINUED)

NOTE

There are two transmission filters that require changing: main and lube. Filters are located next to each other. Procedure is identical for both filters.

5. Remove six bolts (Figure 2, Item 6), cover (Figure 2, Item 5), gasket (Figure 2, Item 4), seals (Figure 2, Item 2 and 3), and filter (Figure 2, Item 1).
6. Separate filter (Figure 2, Item 1) from cover (Figure 2, Item 5). Discard filter, gasket, and seals.
7. Remove old gasket residue.
8. Remove drain pan.

END OF TASK

INSTALLATION

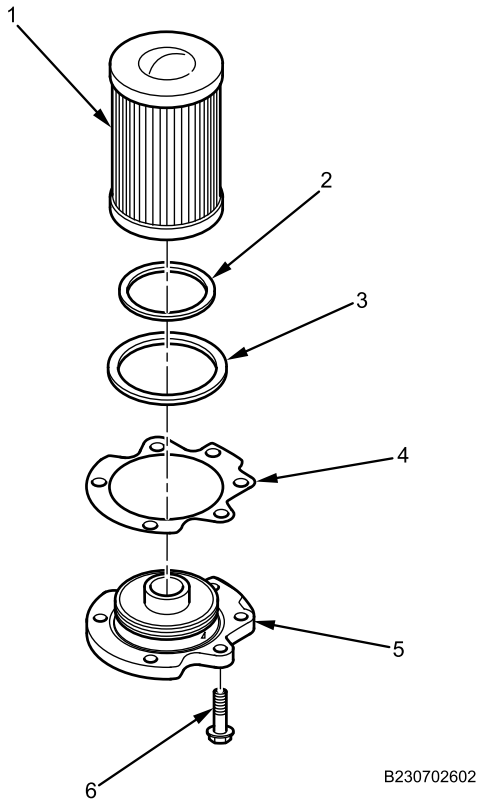

Figure 3. Filter and Seals.

1. Position new seals (Figure 3, Item 2 and 3) and new gasket (Figure 3, Item 4) on cover (Figure 3, Item 5).
2. Install new filter (Figure 3, Item 1) on cover (Figure 3, Item 5).

TRANSMISSION FLUID AND FILTER REMOVAL AND INSTALLATION - (CONTINUED)

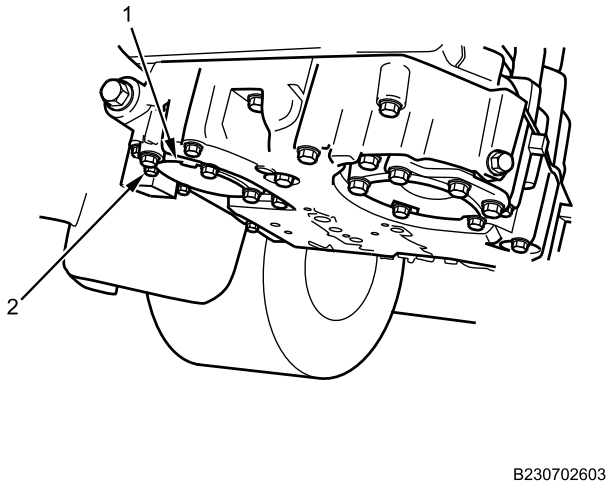

Figure 4. Filter Cover.

3. Install filter cover (Figure 4, Item 1) on transmission with six bolts (Figure 4, Item 2) and tighten to 38-45 lb-ft (52-61 N•m).

END OF TASK

FOLLOW-ON MAINTENANCE

1. Fill transmission with fluid until it is at the proper level (TM 9-2355-106-10).
2. Turn MAIN POWER switch on (TM 9-2355-106-10).
3. Start engine (TM 9-2355-106-10).
4. Inspect for leaks (TM 9-2355-106-10).
5. Turn engine off (TM 9-2355-106-10).
6. Turn MAIN POWER switch off (TM 9-2355-106-10).
7. Install belly armor (WP 0606).
8. Close engine hood (TM 9-2355-106-10).
9. Remove wheel chocks (TM 9-2355-106-10).

END OF TASK

END OF WORK PACKAGE

FIELD MAINTENANCE

TRANSMISSION BREATHER REMOVAL AND INSTALLATION

INITIAL SETUP:

Tools and Special Tools
General Mechanic's Tool Kit (GMTK) (WP 0795, Item 37)

References
TM 9-2355-106-10
TM 9-2355-106-23P
WP 0786
WP 0782

Equipment Condition
Parking brake set (TM 9-2355-106-23)
Transmission set in NEUTRAL (N) (TM 9-2355-106-23)
Engine off (TM 9-2355-106-23)
MAIN POWER switch off (TM 9-2355-106-23)
Wheels chocked (TM 9-2355-106-23)
Belly armor removed (WP 0606)

REMOVAL

NOTE

Breather is located on top of transmission. Clean area around breather before removal to ensure dirt does not enter transmission.

1. Unscrew nut (Figure 1, Item 2) under breather (Figure 1, Item 1) from transmission (Figure 1, Item 3).

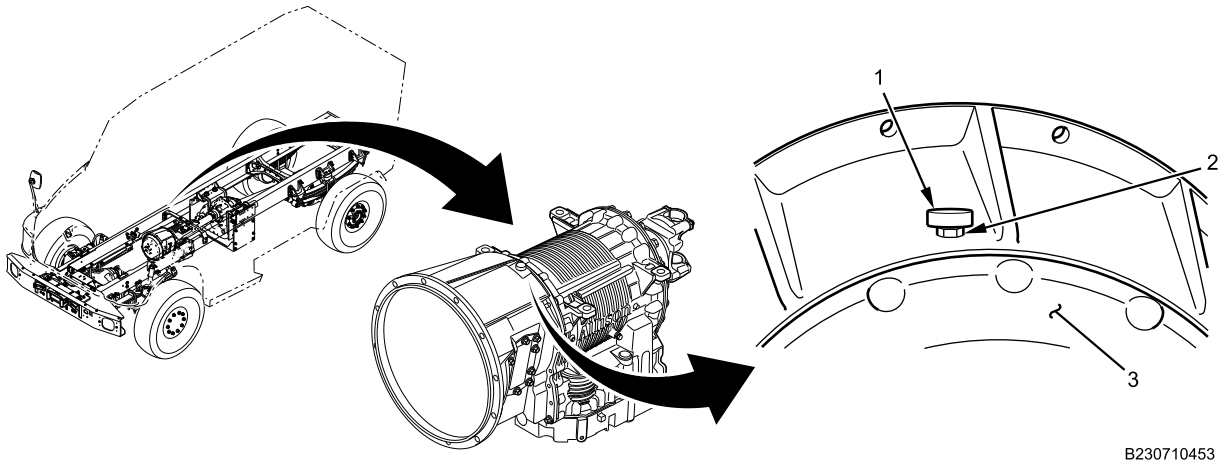

Figure 1. Breather.

2. Pull upward to remove.

END OF TASK

TRANSMISSION BREATHER REMOVAL AND INSTALLATION - (CONTINUED)

INSTALLATION

1. Insert breather (Figure 2, Item 1) into transmission (Figure 2, Item 3).

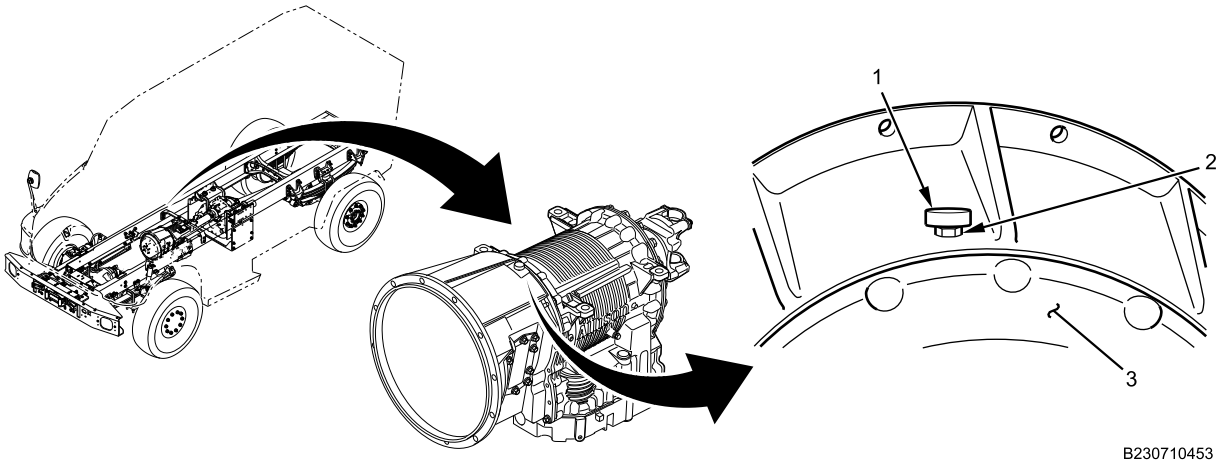

Figure 2. Breather.

2. Hand turn breather (Figure 2, Item 1) on transmission until seated. Tighten nut (Figure 2, Item 2) securely.

END OF TASK

FOLLOW-ON MAINTENANCE

1. Install belly armor (WP 0606).
2. Remove wheel chocks (TM 9-2355-106-23).

END OF TASK

END OF WORK PACKAGE

FIELD MAINTENANCE

TRANSMISSION SPEED SENSORS REMOVAL AND INSTALLATION

INITIAL SETUP:

Tools and Special Tools
General Mechanic's Tool Kit (GMTK) (WP 0795, Item 37)

Materials/Parts
Rag (WP 0794, Item 39)
O-ring (WP 0796, Item 31)

References
TM 9-2355-106-10
TM 9-2355-106-23P
WP 0786
WP 0782

Equipment Condition
Parking brake set (TM 9-2355-106-10)
Transmission set in NEUTRAL (N) (TM 9-2355-106-10)
Engine off (TM 9-2355-106-10)
MAIN POWER switch off (TM 9-2355-106-10)
Wheels chocked (TM 9-2355-106-10)
Belly armor removed (WP 0606)

CAUTION

Before removing speed sensor, clean surrounding area to prevent dirt and debris from damaging transmission.

NOTE

Input speed sensor is located at front of transmission on right side. Output speed sensor is located at rear of transmission on right side.

Both sensors are removed the same way.

TRANSMISSION SPEED SENSORS REMOVAL AND INSTALLATION - (CONTINUED)

REMOVAL

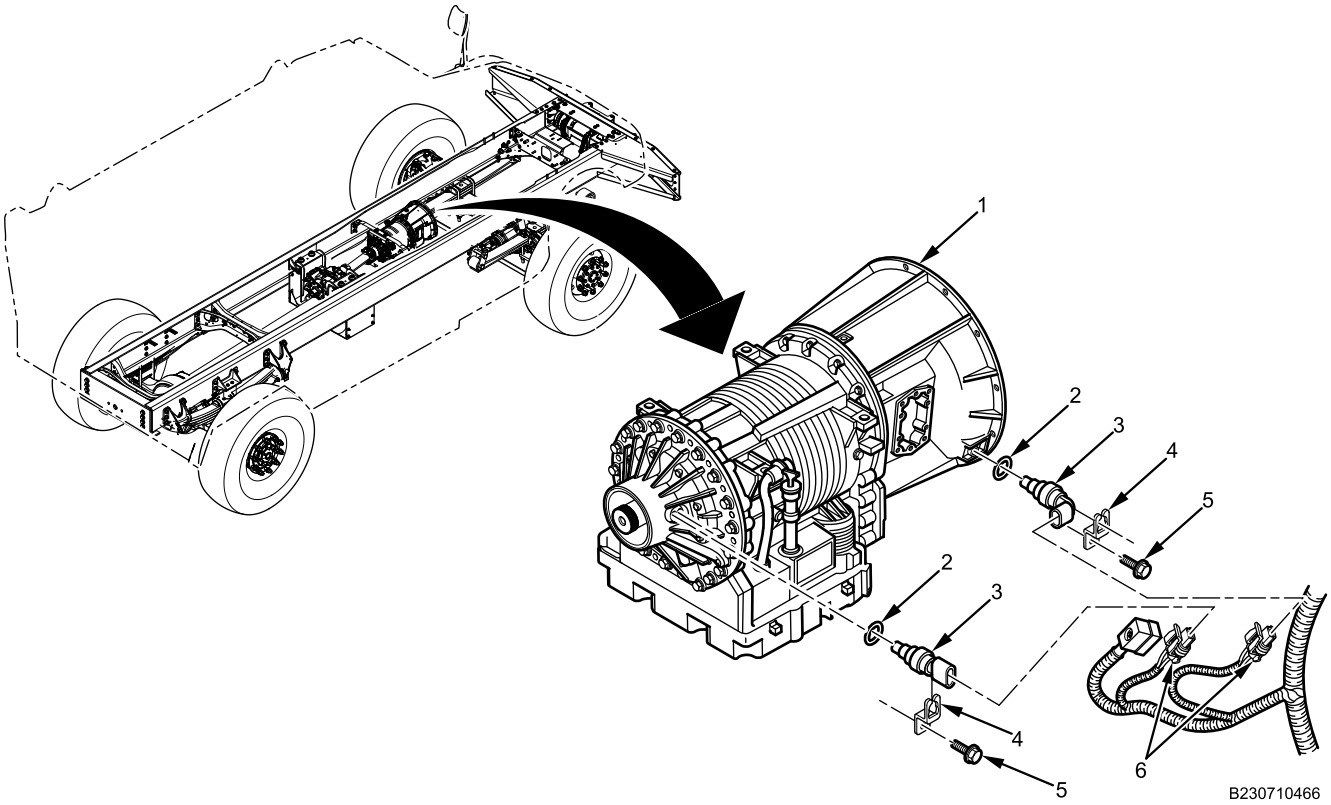

Figure 1. Transmission Input and Output Speed Sensors.

1. Remove connector (Figure 1, Item 6) from speed sensor (Figure 1, Item 3).
2. Remove bolt (Figure 1, Item 5) and retainer (Figure 1, Item 4) securing speed sensor (Figure 1, Item 3) to transmission (Figure 1, Item 1).
3. Remove speed sensor (Figure 1, Item 3) from transmission (Figure 1, Item 1).
4. Remove O-ring (Figure 1, Item 2) from sensor (Figure 1, Item 3). Discard O-ring (Figure 1, Item 2).

END OF TASK

INSTALLATION

NOTE

Both sensors are installed the same way.

1. Install new O-ring (Figure 2, Item 2) on speed sensor (Figure 2, Item 3).

TRANSMISSION SPEED SENSORS REMOVAL AND INSTALLATION - (CONTINUED)

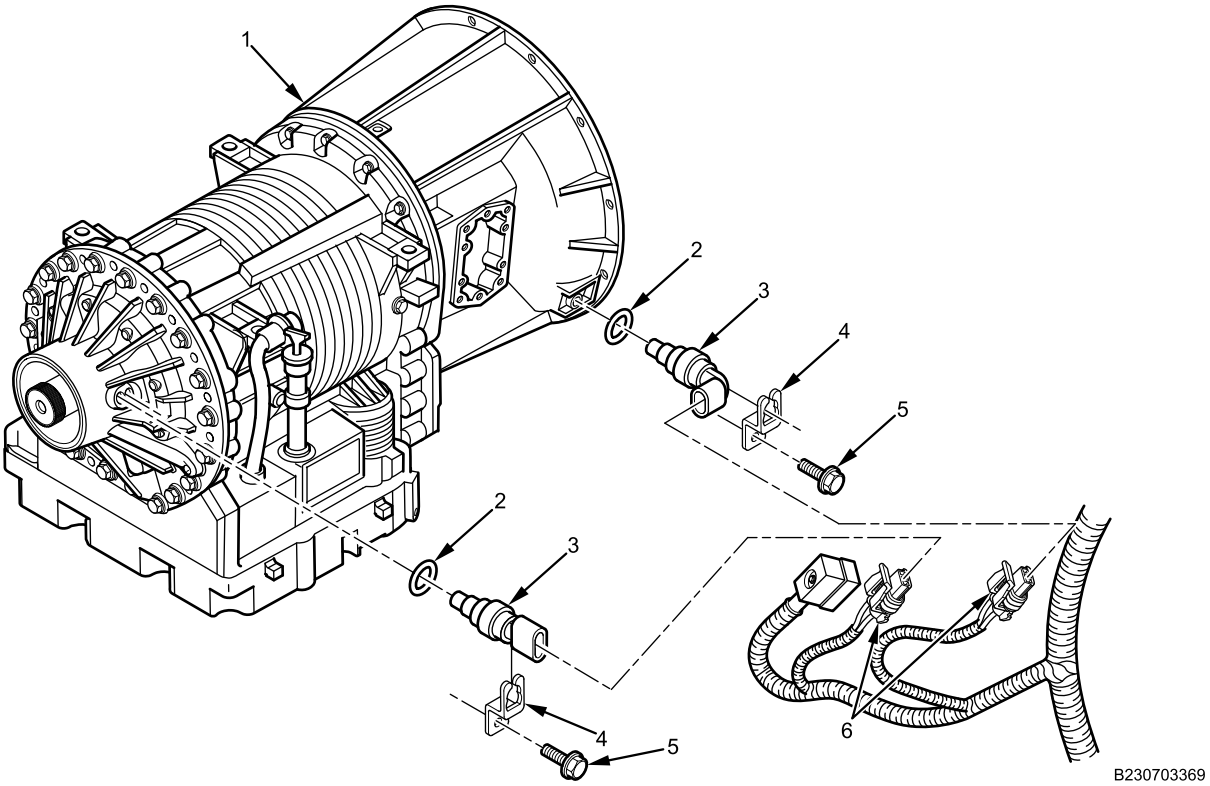

Figure 2. Transmission Input and Output Speed Sensors.

2. Install speed sensor (Figure 2, Item 3) with new O-ring (Figure 2, Item 2) in transmission (Figure 2, Item 1) and press firmly until seated.
3. Install retainer (Figure 2, Item 4) on sensor (Figure 2, Item 3) with bolt (Figure 2, Item 5). Tighten bolt securely.
4. Install electrical connector (Figure 2, Item 6) on speed sensor.

END OF TASK

FOLLOW-ON MAINTENANCE

1. Turn MAIN POWER switch on (TM 9-2355-106-10).
2. Operate vehicle and verify proper function of speed sensors (TM 9-2355-106-10).
3. Turn MAIN POWER switch off (TM 9-2355-106-10).
4. Install belly armor (WP 0606).
5. Remove wheel chocks (TM 9-2355-106-10).

END OF TASK

END OF WORK PACKAGE

FIELD MAINTENANCE

TRANSFER CASE ASSEMBLY REMOVAL AND INSTALLATION

INITIAL SETUP:

Tools and Special Tools
General Mechanic's Tool Kit (GMTK) (WP 0795, Item 37)
Pan, drain, 5-gal. capacity (WP 0795, Item 75)
Jack, transmission (WP 0795,)
Torque wrench, 1/2-inch drive (50-250 lb-ft) (WP 0795, Item 143)

Materials/Parts
Lubricating oil (WP 0794, Item 29WP 0794, Item 30)
Lockwasher - (8) (WP 0796, Item 26)
Wire tags (WP 0794, Item 33)

Personnel Required
Maintainer - (2)

References
TM 9-2355-106-10P
TM 9-2355-106-23P
WP 0786
WP 0782

Equipment Condition
Parking brake set (TM 9-2355-106-10)
Transmission set in NEUTRAL (N) (TM 9-2355-106-10)
Engine off (TM 9-2355-106-10)
MAIN POWER switch off (TM 9-2355-106-10)
Wheels chocked (TM 9-2355-106-10)
Air tanks drained (TM 9-2355-106-10)
Transfer case drained (WP 0466)
Belly armor removed (WP 0606)
Transfer case armor removed (WP 0462)
Prop shafts removed (WP 0468)
Transmission-to-transfer case driveshaft removed (WP 0469)

WARNING

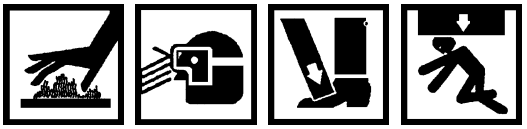

During normal vehicle operation, transfer case and oil cooler can become very hot. Allow transfer case and oil cooler to cool prior to servicing oil cooler. Wear safety goggles, work gloves, and protective clothing. Use extreme caution when opening drain valves and removing bolts. Failure to comply may result in serious injury to personnel.

Support transfer case with lifting strap before mounting on repair stand. Failure to comply may cause transfer case to fall, resulting in damage to equipment and serious injury to personnel.

Before lifting vehicle off ground, make sure it is parked on level surface. Set parking brake and chock wheels. Use hydraulic jack to lift vehicle. Jackstands and hydraulic jack must be used on a stable surface capable of supporting the combined weight of the vehicle being lifted and the lifting equipment. Do not use jack alone to support vehicle. Never work under or near a vehicle supported only by jack or lifting device. Use rated jackstands under frame rails to properly support vehicle. Do not support vehicle under front and rear axles. Use additional jackstands as necessary to support vehicle components during removal and installation procedures. Failure to comply may result in damage to equipment and serious injury or death to personnel.

TRANSFER CASE ASSEMBLY REMOVAL AND INSTALLATION - (CONTINUED)

NOTE

The transfer case weighs approximately 625 lbs (283.5 kg).

Tag transfer case air lines, cooling hoses, and wiring harness prior to removal to ensure proper positioning during installation.

REMOVAL

1. Disconnect three air lines (Figure 1, Item 1) from transfer case shift cylinder.

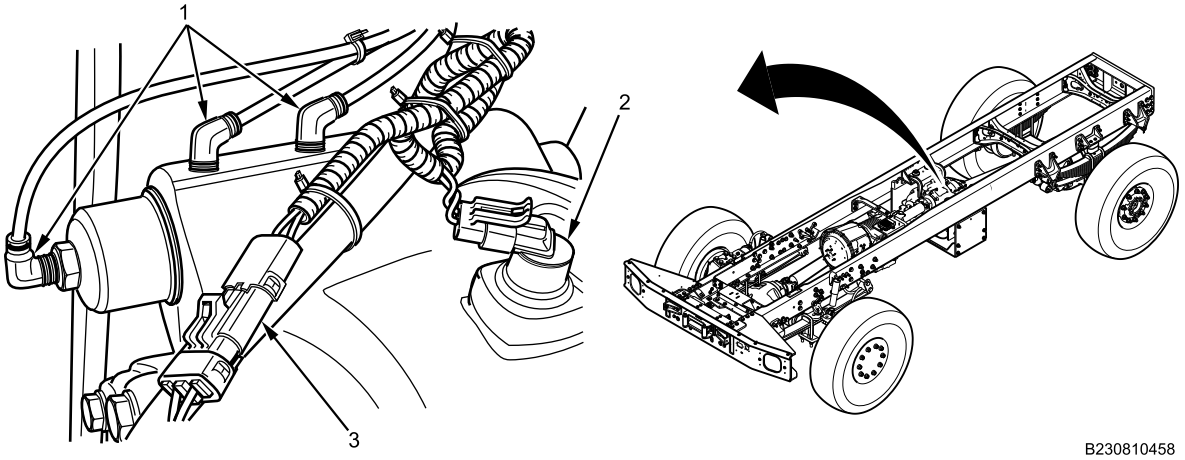

Figure 1. Top of Transfer Case.

2. Disconnect wiring harness from transfer case speed sensor (Figure 1, Item 2).
3. Disconnect transfer case speed sensor wiring harness (Figure 1, Item 3).
4. Disconnect air line (Figure 2, Item 1) from front of transfer case.

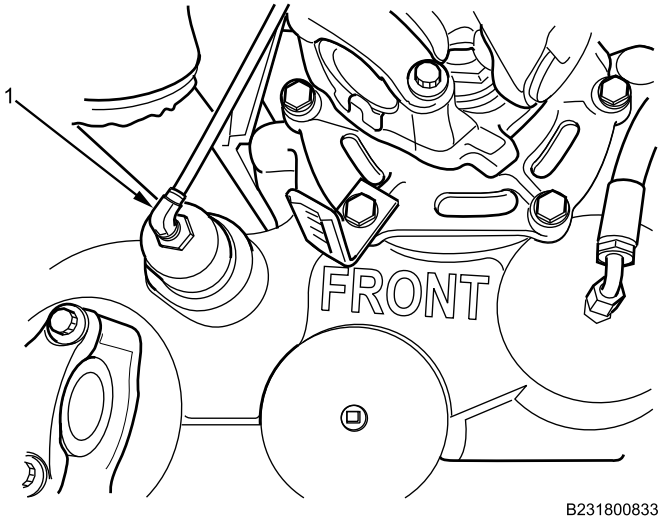

Figure 2. Front of Transfer Case.

TRANSFER CASE ASSEMBLY REMOVAL AND INSTALLATION - (CONTINUED)

5. Remove air line clamp bolt (Figure 3, Item 3) from bracket (Figure 3, Item 4) . Remove air line (Figure 3, Item 1) from clamp (Figure 3, Item 2).

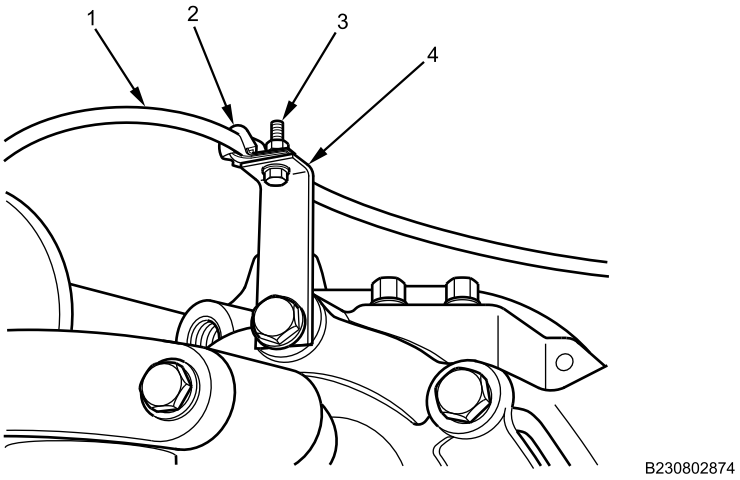

Figure 3. Air Line Clamp.

6. Remove fuel line cable lock straps (Figure 4, Item 1, 2, and 5) from fuel line tubing (Figure 4, Item 3), transfer case vent tube (Figure 4, Item 4), and transfer case engagement sensor harness (Figure 4, Item 6). Discard cable lock straps.

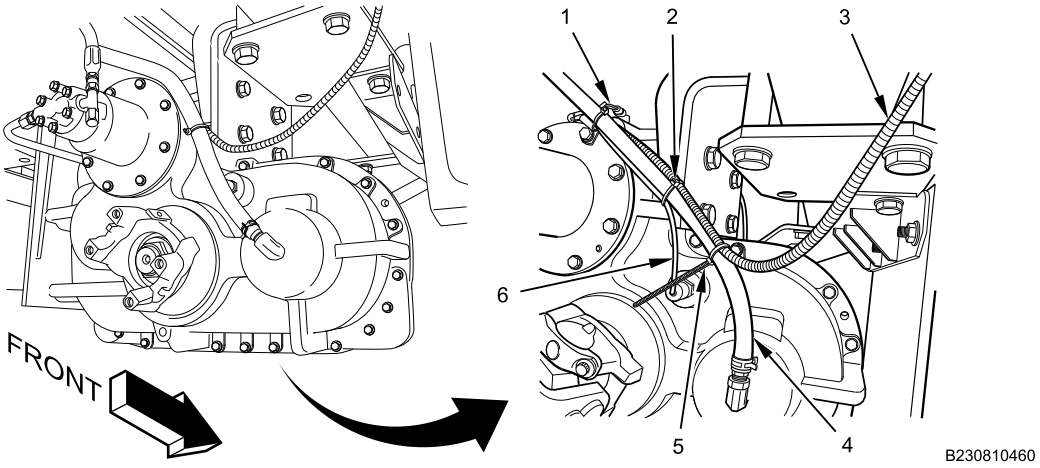

Figure 4. Transfer Case Vent Tube.

TRANSFER CASE ASSEMBLY REMOVAL AND INSTALLATION - (CONTINUED)

7. Position drain pan under transfer case.

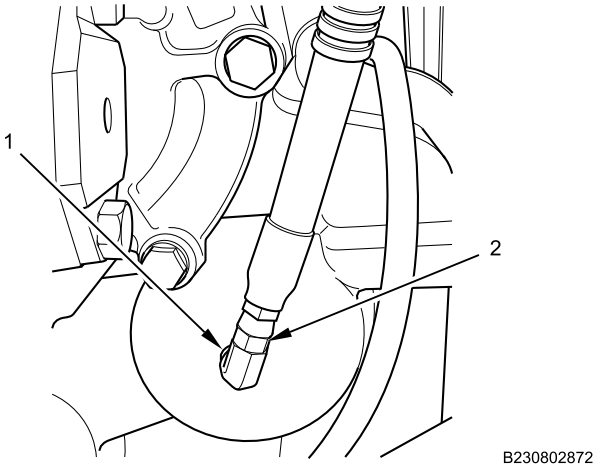

Figure 5. Front of Transfer Case.

8. Disconnect front transfer case oil cooling hose (Figure 5, Item 2) from transfer case fitting (Figure 5, Item 1). Plug end of hose.

TRANSFER CASE ASSEMBLY REMOVAL AND INSTALLATION - (CONTINUED)

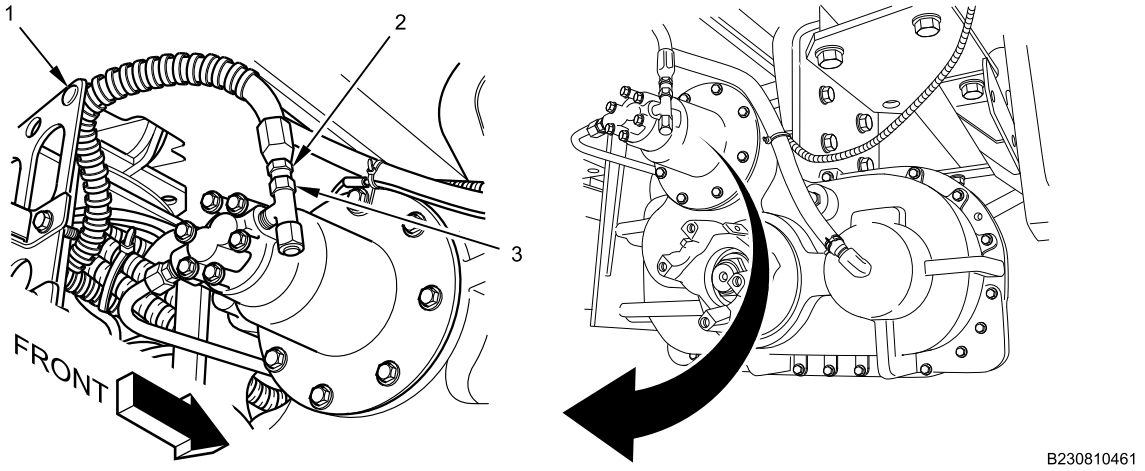

Figure 6. Rear of Transfer Case.

9. Disconnect rear transfer case oil cooling hose (Figure 6, Item 2) from transfer case fitting (Figure 6, Item 3). Plug end of hose. Leave transfer case oil cooling hose connected to clamp (Figure 6, Item 1).
10. Place transmission jack under transfer case assembly and support weight of transfer case. With the aid of an assistant, secure transfer case to transmission jack.

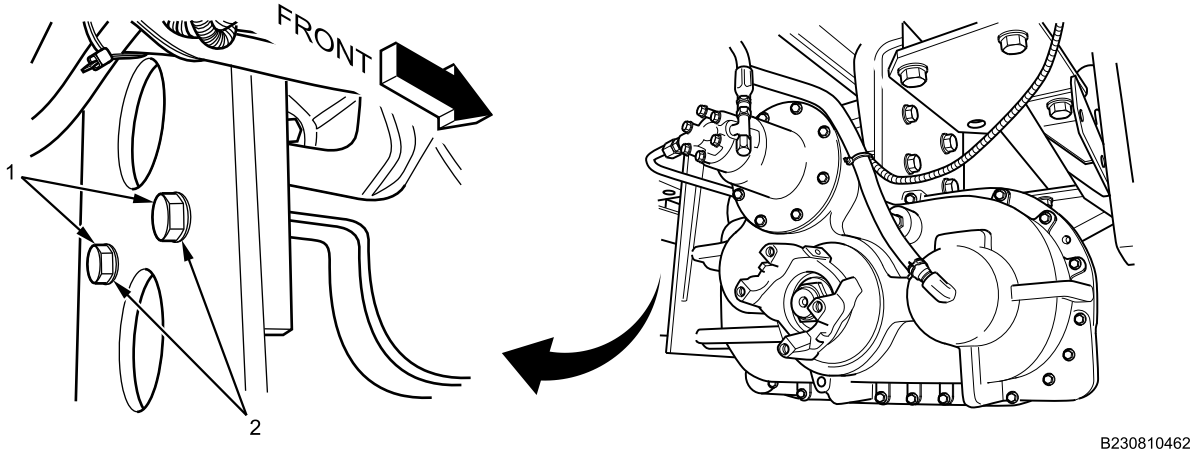

Figure 7. Left Side of Transfer Case Mounting.

11. Remove four mounting bolts (Figure 7, Item 1) and lockwashers (Figure 7, Item 2) from left side of transfer case. Discard lockwashers. Two bolts and lockwashers not shown.

TRANSFER CASE ASSEMBLY REMOVAL AND INSTALLATION - (CONTINUED)

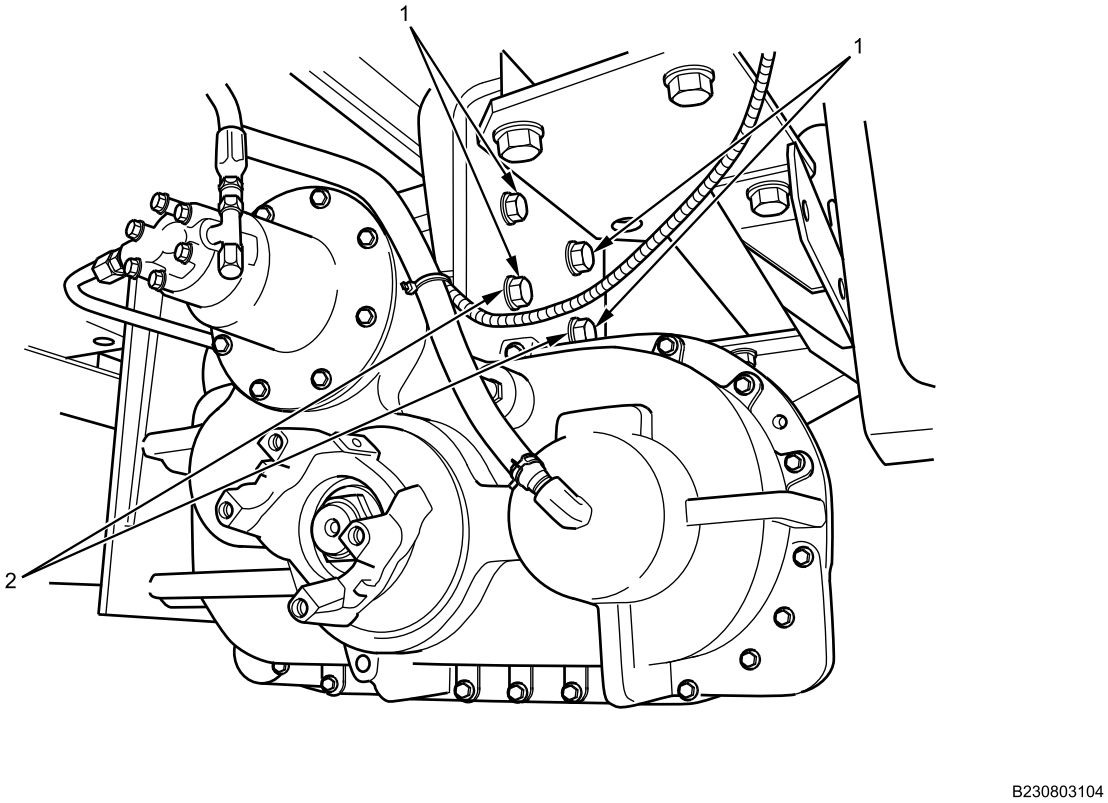

Figure 8. Right Side of Transfer Case Mounting.

12. Remove four mounting bolts (Figure 8, Item 1) and lockwashers (Figure 8, Item 2) from right side of transfer case. Discard lockwashers.
13. Lower transfer case slowly and remove from vehicle.

END OF TASK

INSTALLATION

NOTE

Transfer all fittings or electrical switches/components to new transfer case.

1. With crewmember assistance, secure transfer case assembly on transmission jack and raise into position level with two transfer case mounting brackets.

TRANSFER CASE ASSEMBLY REMOVAL AND INSTALLATION - (CONTINUED)

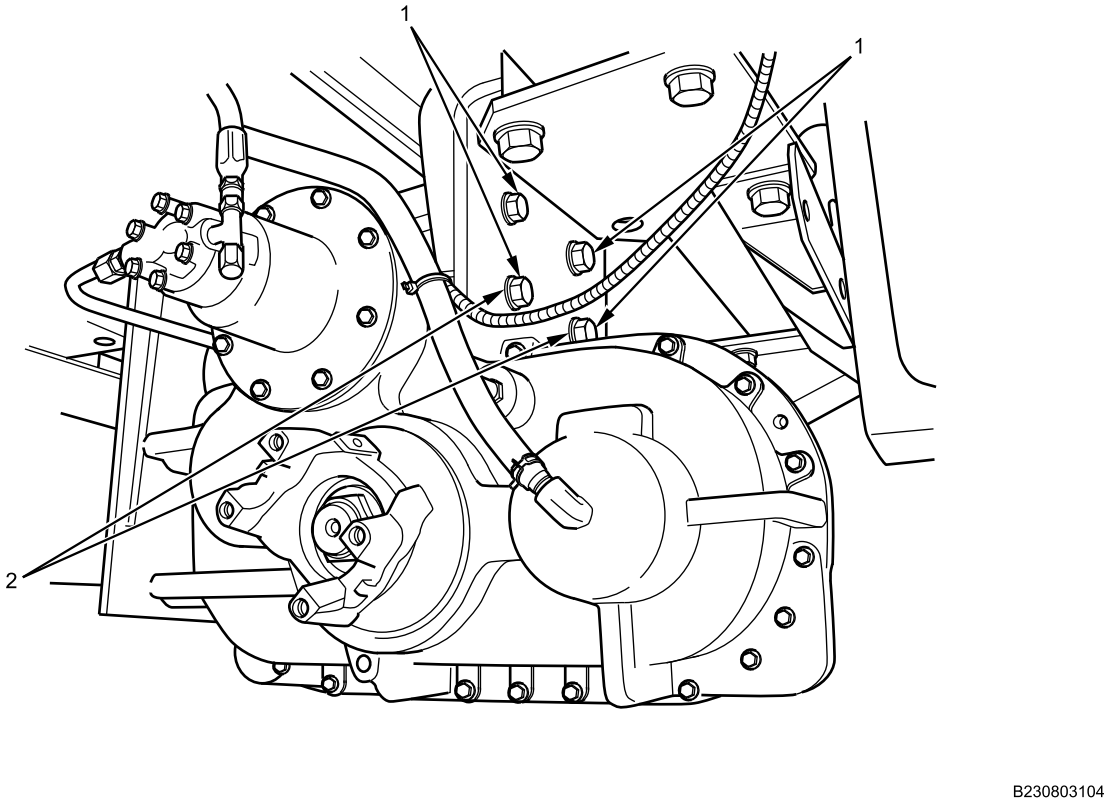

Figure 9. Right Side of Transfer Case Mounting.

2. Install four mounting bolts (Figure 9, Item 1) and new lockwashers (Figure 9, Item 2) on right side transfer case bracket.

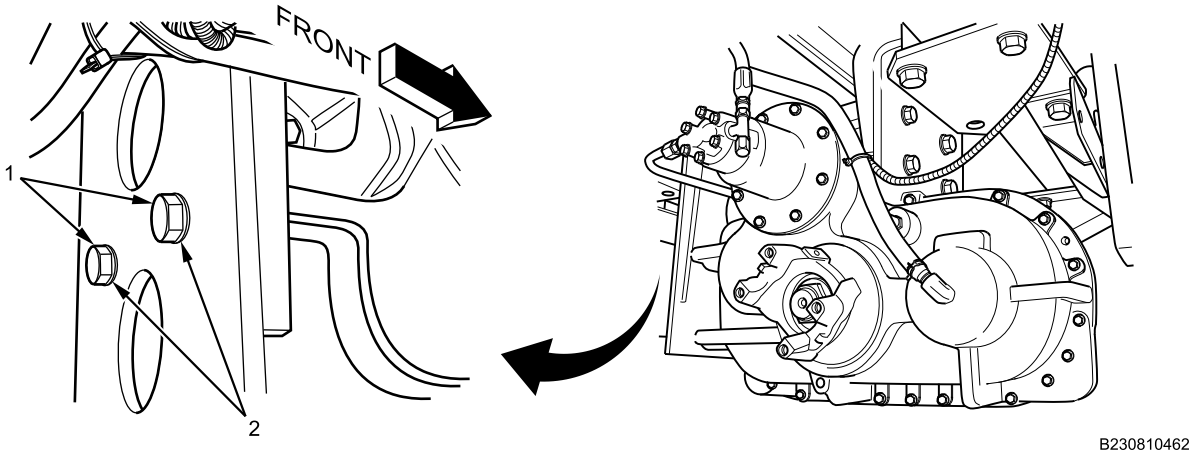

Figure 10. Left Side of Transfer Case Mounting.

3. Install four mounting bolts (Figure 10, Item 1) and new lockwashers (Figure 10, Item 2) on left side transfer case bracket. Two bolts and lockwashers not shown.
4. Torque transfer case mounting bolts to 145-175 lb-ft (197-237 N•m).

TRANSFER CASE ASSEMBLY REMOVAL AND INSTALLATION - (CONTINUED)

5. Remove transmission jack.

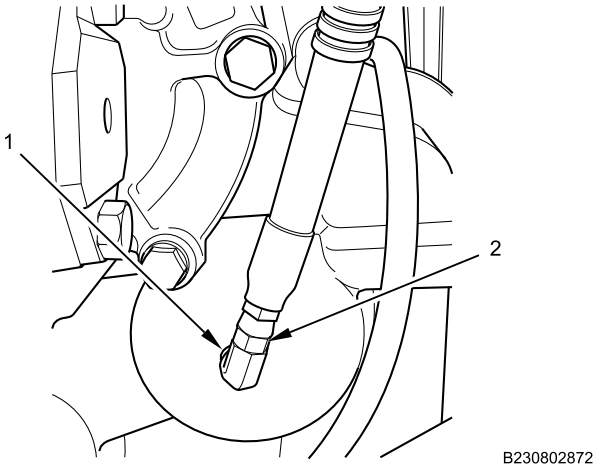

Figure 11. Front of Transfer Case.

6. Connect front transfer case oil cooling hose (Figure 11, Item 2) to transfer case fitting (Figure 11, Item 1). Tighten fitting securely.

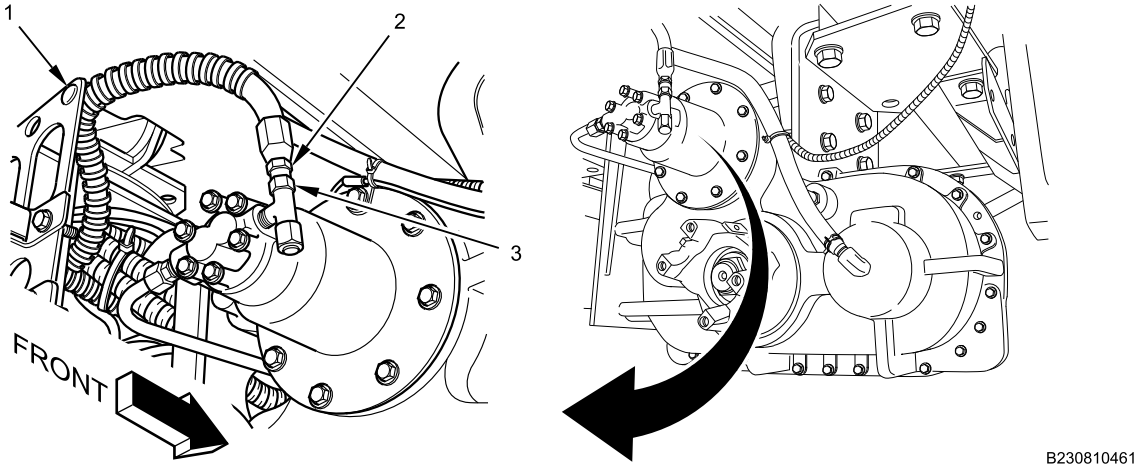

Figure 12. Rear of Transfer Case.

7. Connect rear transfer case oil cooling hose (Figure 12, Item 2) to transfer case fitting (Figure 12, Item 3). Ensure transfer case oil cooling hose is connected to clamp (Figure 12, Item 1).

TRANSFER CASE ASSEMBLY REMOVAL AND INSTALLATION - (CONTINUED)

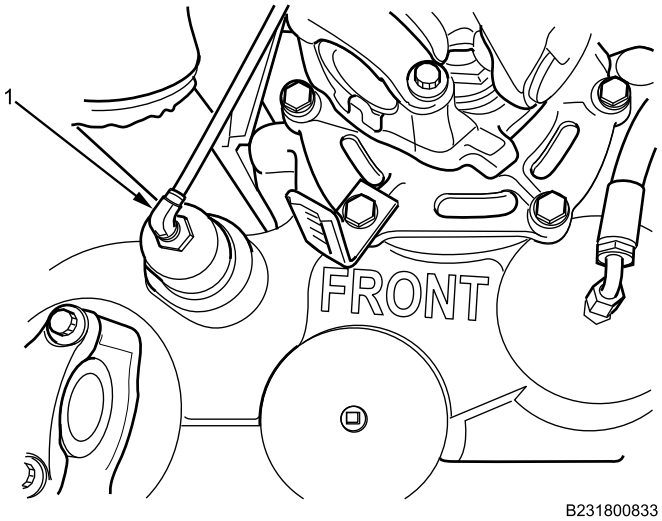

Figure 13. Front of Transfer Case.

8. Install transfer case front air line (Figure 13, Item 1) securely on front of transfer case.

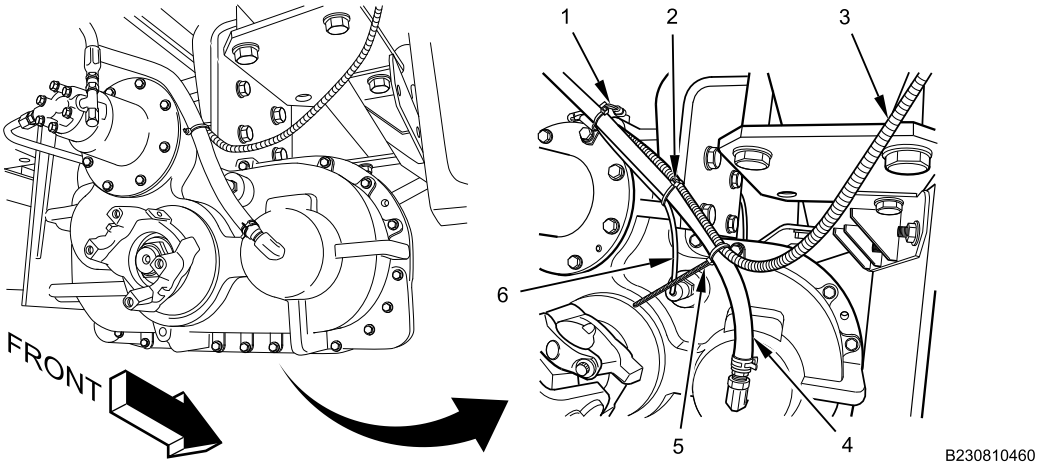

Figure 14. Transfer Case Vent Tube.

9. Install new fuel line tubing cable lock straps (Figure 14, Item 1, 2, and 5) on fuel line tubing (Figure 14, Item 3), transfer case vent tube (Figure 14, Item 4), and transfer case engagement sensor harness (Figure 14, Item 6).

TRANSFER CASE ASSEMBLY REMOVAL AND INSTALLATION - (CONTINUED)

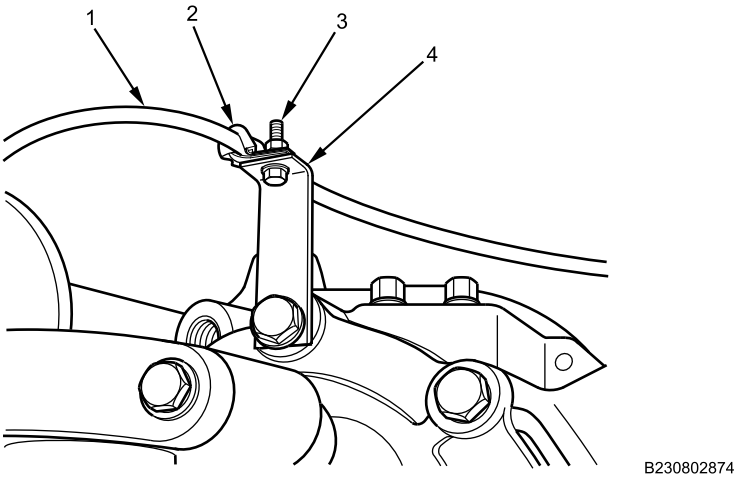

Figure 15. Air Line Clamp.

10. Install clamp (Figure 15, Item 2) on air line (Figure 15, Item 1). Install bolt (Figure 15, Item 3) into bracket (Figure 15, Item 4) and clamp. Tighten securely.
11. Install three air lines (Figure 16, Item 1) securely on transfer case shift cylinder.

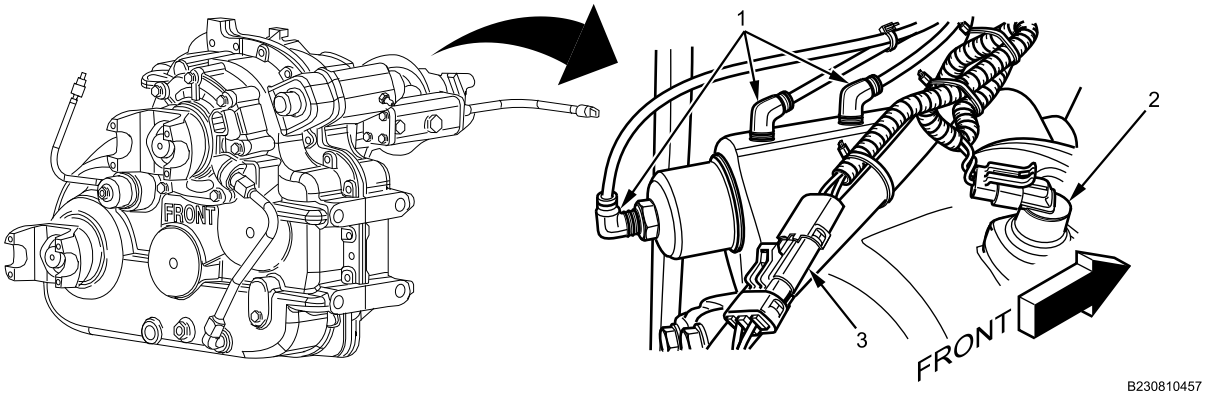

Figure 16. Top of Transfer Case.

12. Connect wiring harness (Figure 16, Item 2) to transfer case speed sensor.
13. Install harness connector (Figure 16, Item 3) on transfer case front driveshaft sensor.

END OF TASK

FOLLOW-ON MAINTENANCE

1. Fill transfer case with proper fluid (WP 0466)
2. Install transmission-to-transfer case driveshaft (WP 0469).
3. Install prop shafts (WP 0468)
4. Install transfer case armor (WP 0462)
5. Turn MAIN POWER switch on (TM 9-2355-106-10).
6. Start engine; run to operating temperature (TM 9-2355-106-10).
7. Ensure air tanks are to operating pressure (TM 9-2355-106-10).

TRANSFER CASE ASSEMBLY REMOVAL AND INSTALLATION - (CONTINUED)

8. Verify gauge operation (TM 9-2355-106-10).
9. Check for leaks (TM 9-2355-106-10).
10. Remove wheel chocks (TM 9-2355-106-10).
11. Test-drive vehicle to verify transfer case operation (TM 9-2355-106-10).
12. Set transmission in NEUTRAL (N) (TM 9-2355-106-10).
13. Set parking brake (TM 9-2355-106-10).
14. Turn engine off (TM 9-2355-106-10).
15. Turn MAIN POWER switch off (TM 9-2355-106-10).
16. Chock wheels (TM 9-2355-106-10).
17. Check for leaks (TM 9-2355-106-10).
18. Check transfer case fluid level after cool-down (WP 0466).
19. Install belly armor (WP 0606)

END OF TASK

END OF WORK PACKAGE

FIELD MAINTENANCE

TRANSFER CASE MOUNT AND SUPPORT REMOVAL AND INSTALLATION

INITIAL SETUP:

Tools and Special Tools
General Mechanic's Tool Kit (GMTK) (WP 0795, Item 37)
Wrench, combination, standard length, 12 pt, 1-1/8 inch, chrome (WP 0795, Item 137)

Materials/Parts
Cable lock strap - (4) (WP 0796, Item 120)
Cable lock strap - (4) (WP 0796, Item 124)

Personnel Required
Maintainer - (2)

References
TM 9-2355-106-10
TM 9-2355-106-23P
WP 0786
WP 0782

Equipment Condition
Parking brake set (TM 9-2355-106-10)
Transmission set in NEUTRAL (N) (TM 9-2355-106-10)
Engine off (TM 9-2355-106-10)
MAIN POWER switch off (TM 9-2355-106-10)
Wheels chocked (TM 9-2355-106-10)
Transfer case removed (WP 0460)

TRANSFER CASE MOUNT AND SUPPORT REMOVAL AND INSTALLATION - (CONTINUED)

NOTE

This procedure covers left side transfer case mount and support; right side is similar.

Note location of cable lock straps prior to removal for installation.

REMOVAL

1. Remove cable lock strap (Figure 1, Item 2) securing Fire Suppression System (FSS) harness (Figure 1, Item 1) to cabin mounting bolt (Figure 1, Item 4).

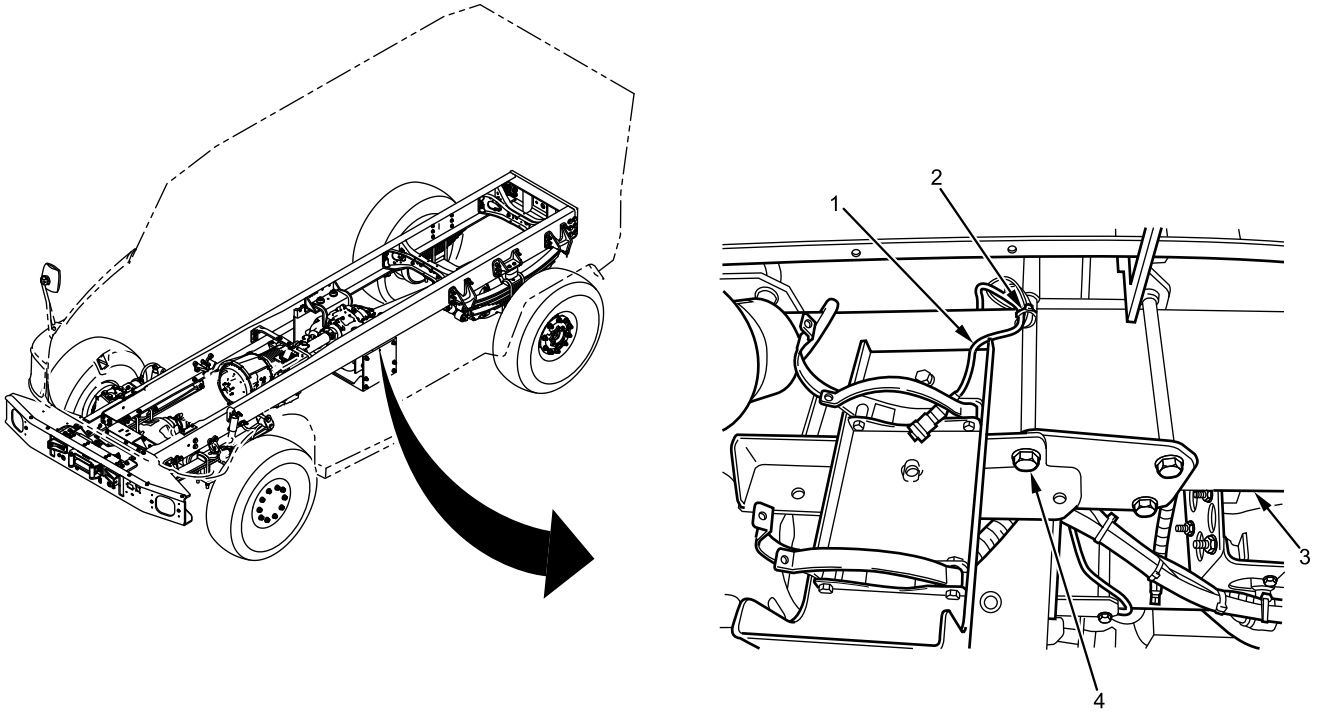

Figure 1. Cabin Mounting Bolt.

NOTE

Note position of nuts and flat washers on cabin mounting bolt to aid installation.

3. With crewmember assistance, remove cabin mounting bolt (Figure 1, Item 4), two nuts, and three flat washers from inboard frame rail (Figure 1, Item 3).
4. Remove two bolts (Figure 2, Item 2) and nuts (Figure 2, Item 8) from transfer case mount (Figure 2, Item 3), separating mount from support (Figure 2, Item 6).

TRANSFER CASE MOUNT AND SUPPORT REMOVAL AND INSTALLATION - (CONTINUED)

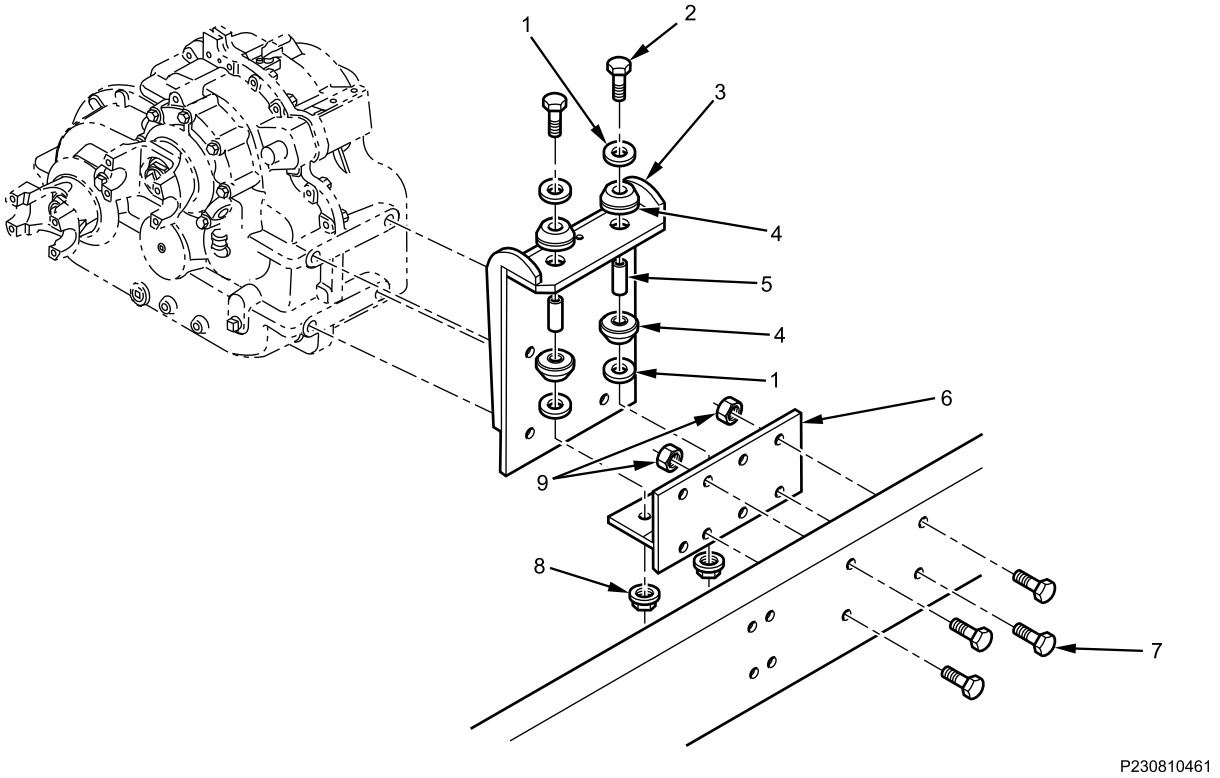

Figure 2. Transfer Case Mount.

5. Remove mount (Figure 2, Item 3).
6. With assistant, remove four bolts (Figure 2, Item 7) and four nuts (Figure 2, Item 9) from transfer case support (Figure 2, Item 6). Two nuts shown.
7. Remove support (Figure 2, Item 6) from frame.

NOTE

Note removal sequence of washers, bushings, and sleeves to aid installation.

8. Remove four washers (Figure 2, Item 1), four bushings (Figure 2, Item 4), and two sleeves (Figure 2, Item 5) from transfer case mount (Figure 2, Item 3).

END OF TASK

TRANSFER CASE MOUNT AND SUPPORT REMOVAL AND INSTALLATION - (CONTINUED)

INSTALLATION

1. With assistant, install transfer case support (Figure 3, Item 6) on frame with four bolts (Figure 3, Item 7) and nuts (Figure 3, Item 9). Tighten securely.

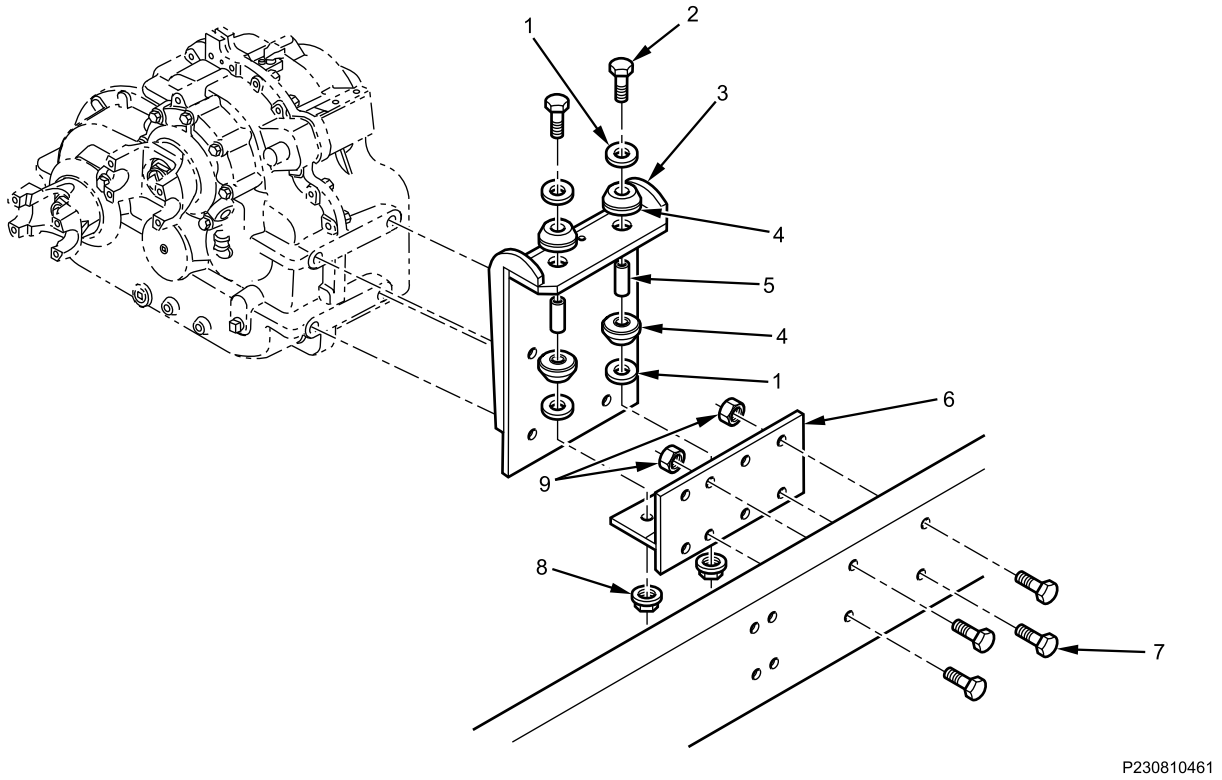

Figure 3. Transfer Case Mount.

2. Install transfer case mount (Figure 3, Item 3) on support (Figure 3, Item 6) with two bolts (Figure 3, Item 2), four washers (Figure 3, Item 1), four bushings (Figure 3, Item 4), two sleeves (Figure 3, Item 5) and two nuts (Figure 3, Item 8). Tighten nuts securely.
3. With maintainer assistance, install cabin mounting bolt (Figure 4, Item 4), three flat washers, and two nuts on inboard frame rail (Figure 4, Item 3) with washers and nuts in positions noted during removal. Tighten two nuts and bolt securely.

TRANSFER CASE MOUNT AND SUPPORT REMOVAL AND INSTALLATION - (CONTINUED)

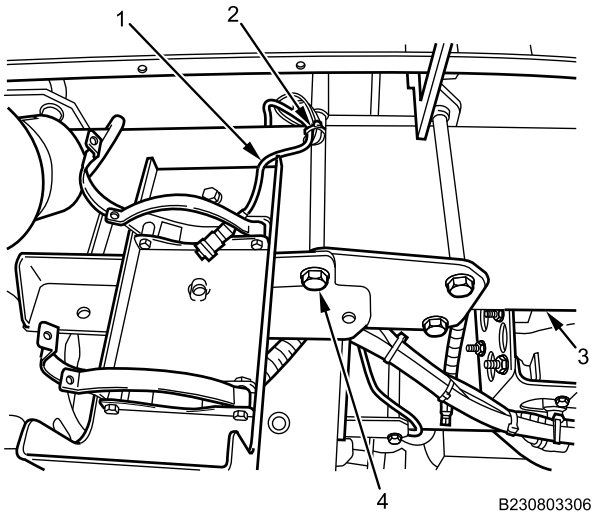

Figure 4. Cabin Mounting Bolt.

4. Secure FSS harness (Figure 4, Item 1) on cabin mounting bolt (Figure 4, Item 4) with new cable lock strap (Figure 4, Item 2).

END OF TASK

FOLLOW-ON MAINTENANCE

1. Install transfer case (WP 0460).
2. Remove wheel chocks (TM 9-2355-106-10).

END OF TASK

END OF WORK PACKAGE

FIELD MAINTENANCE

TRANSFER CASE ARMOR REMOVAL AND INSTALLATION

INITIAL SETUP:

Tools and Special Tools
General Mechanic's Tool Kit (GMTK) (WP 0795, Item 37)
Lifting device (WP 0795, Item 67)
Transmission jack (WP 0795, Item 126)

Materials/Parts
Cable lock strap - (4) (WP 0796, Item 124)

Personnel Required
Maintainer - (2)

References
TM 9-2355-106-10
TM 9-2355-106-23P
WP 0786
WP 0782

Equipment Condition
Parking brake set (TM 9-2355-106-10)
Transmission set in NEUTRAL (N) (TM 9-2355-106-10)
Engine off (TM 9-2355-106-10)
MAIN POWER switch off (TM 9-2355-106-10)
Wheels chocked (TM 9-2355-106-10)

WARNING

Armor parts are heavy. Use care when removing or installing. Do not attempt to lift without an assistant and lifting device. Wear gloves. Failure to comply may result in serious injury or death to personnel.

NOTE

Transfer case armor may be removed as complete assembly, or disassembled as required.

Do not disconnect Fire Suppression System (FSS) cylinders when relocating positions.

TRANSFER CASE ARMOR REMOVAL AND INSTALLATION - (CONTINUED)

REMOVAL

1. Remove upper and lower FSS cylinder mounting bolts (Figure 1, Item 3), nuts, (Figure 1, Item 1) and washers (Figure 1, Item 2) from both sides of transfer case.

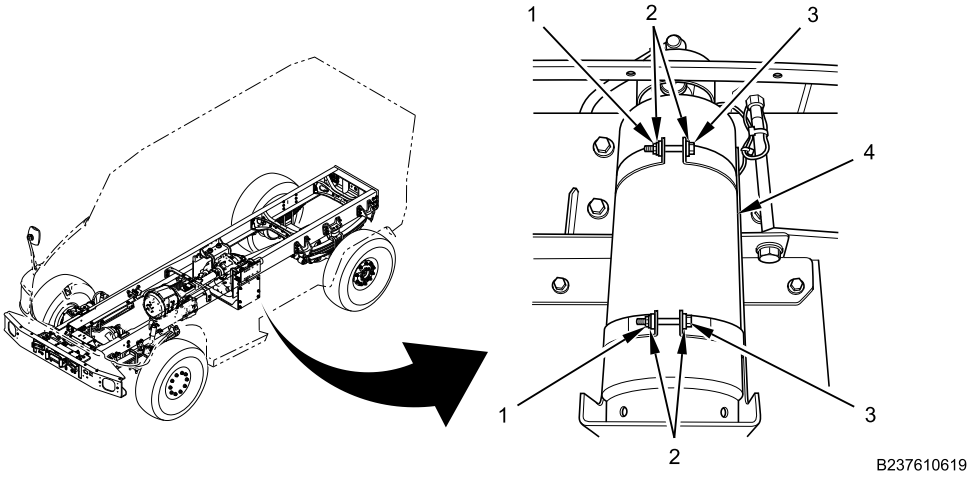

Figure 1. FSS Cylinder Mounting.

2. Reposition both FSS cylinders (Figure 1, Item 4) away from bracket and support with cable lock straps or equivalent.
3. Place transmission jack (Figure 2, Item 4) under transfer case armor assembly (Figure 2, Item 2) and support weight of transfer case armor.

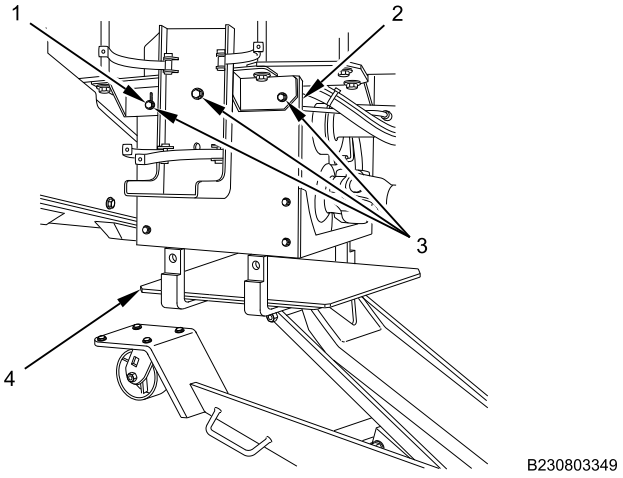

Figure 2. Transfer Case Armor Mounting.

4. With assistant, secure transfer case armor assembly (Figure 2, Item 2) to floor jack (Figure 2, Item 4), using straps supplied with transmission jack or equivalent straps.
5. Remove three upper transfer case armor mounting bolts (Figure 2, Item 3) and nuts from left and right side mounting bracket (Figure 2, Item 1).

TRANSFER CASE ARMOR REMOVAL AND INSTALLATION - (CONTINUED)

WARNING

Prior to moving heavy components with lifting device, clear path of travel and clear personnel from area. Use proper lifting device for weight of item. Use extreme caution if lifting objects overhead or backing up. Stop and lower load as soon as possible. Failure to comply may result in damage to equipment and serious injury or death to personnel.

6. Lower transfer case armor assembly (Figure 2, Item 2) slowly and remove from vehicle.

END OF TASK

INSTALLATION

1. Secure transfer case armor assembly (Figure 3, Item 2) on transmission jack (Figure 3, Item 4) using straps supplied with transmission jack or equivalent straps.

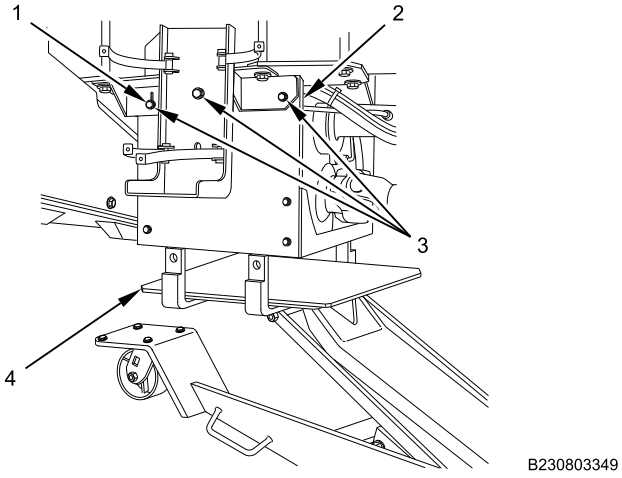

Figure 3. Transfer Case Armor Mounting.

2. Raise armor assembly (Figure 3, Item 2) into position level with transfer case armor mounting position along frame rail.
3. Install three upper transfer case armor assembly mounting bolts (Figure 3, Item 3) and nuts on left and right side mounting bracket (Figure 3, Item 1).
4. Tighten all transfer case armor assembly mounting bolts (Figure 3, Item 3) and nuts securely.

TRANSFER CASE ARMOR REMOVAL AND INSTALLATION - (CONTINUED)

5. Position both FSS cylinders (Figure 4, Item 4) onto mounting brackets. Install upper and lower mounting bolts (Figure 4, Item 3), washers (Figure 4, Item 2), and nuts (Figure 4, Item 1), and tighten securely.

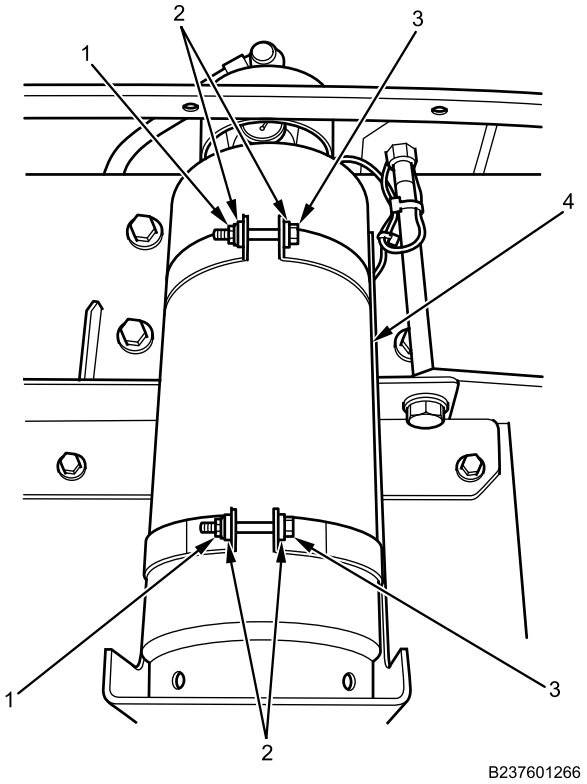

Figure 4. FSS Cylinder Mounting.

END OF TASK

FOLLOW-ON MAINTENANCE

1. Remove wheel chocks (TM 9-2355-106-10).

END OF TASK

END OF WORK PACKAGE

FIELD MAINTENANCE

TRANSFER CASE AIR LINES REMOVAL AND INSTALLATION

INITIAL SETUP:

Tools and Special Tools
General Mechanic's Tool Kit (GMTK) (WP 0795, Item 37)

Materials/Parts
Cable lock strap - (4) (WP 0796, Item 124)
Wire tags (WP 0794, Item 50)

References
TM 9-2355-106-10
TM 9-2355-106-23P
WP 0786
WP 0782

Equipment Condition
Parking brake set (TM 9-2355-106-10)
Transmission set in NEUTRAL (N) (TM 9-2355-106-10)
Engine off (TM 9-2355-106-10)
MAIN POWER switch off (TM 9-2355-106-10)
Wheels chocked (TM 9-2355-106-10)
Air tanks drained (TM 9-2355-106-10)
Belly armor removed (WP 0606)
Transmission to transfer case driveshaft removed (WP 0469)

WARNING

Do not disconnect any air line or fitting until system pressure has been relieved. Hoses may whip and injure personnel, and air under pressure can penetrate skin. Failure to comply may result in serious injury or death to personnel.

CAUTION

Disconnect and connect one air line at a time from one end to the other. When reconnecting air lines, ensure that each end is connected to the proper cylinder and/or solenoid. Improperly connecting the air lines may cause serious equipment damage.

TRANSFER CASE AIR LINES REMOVAL AND INSTALLATION - (CONTINUED)

NOTE

Label and tag each air line color with location at shift cylinder and four-pack solenoid to ensure correct installation.

Top views of chassis shown for component clarification.

REMOVAL

1. Disconnect RED air line (Figure 1, Item 2) from front axle shift cylinder (Figure 1, Item 1) of transfer case.

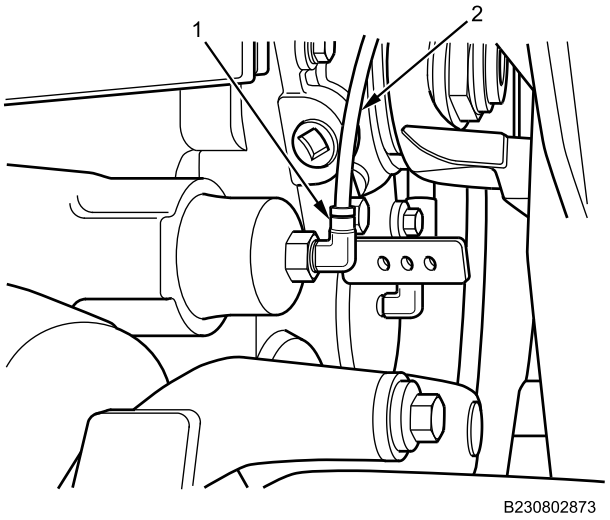

Figure 1. Front Axle Shift Cylinder Air Line.

2. Remove bolt and nut (Figure 2, Item 3) from clamp (Figure 2, Item 2) and front axle shift cylinder air line bracket (Figure 2, Item 4) on transfer case.

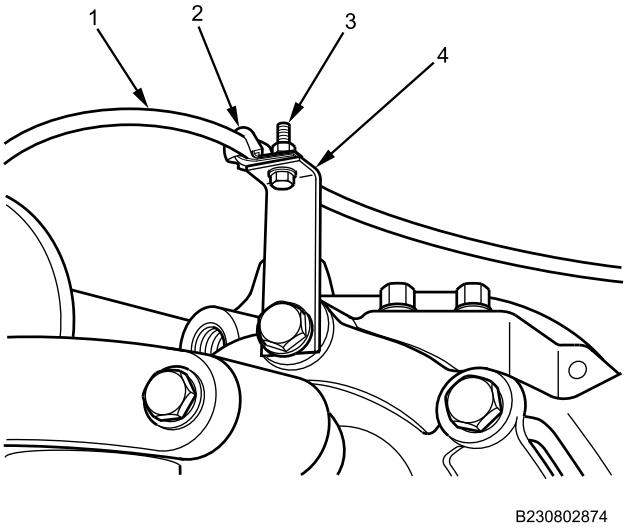

Figure 2. Front Axle Shift Cylinder Air Line Bracket.

TRANSFER CASE AIR LINES REMOVAL AND INSTALLATION - (CONTINUED)

3. Remove clamp (Figure 2, Item 2) from RED front axle shift cylinder air line (Figure 2, Item 1) on transfer case.
4. Disconnect PURPLE air line (Figure 3, Item 1) from low range port of two-speed shift cylinder (Figure 3, Item 2) on transfer case.

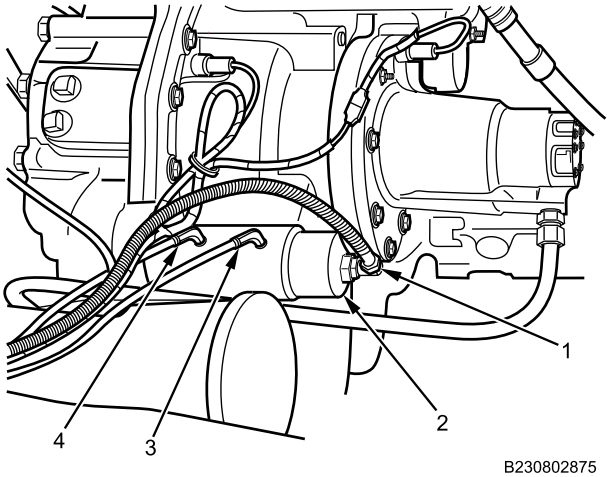

Figure 3. Two-Speed Shift Cylinder Air Line Connections.

5. Disconnect BLACK air line (Figure 3, Item 3) from neutral port of two-speed shift cylinder (Figure 3, Item 2) on transfer case.
6. Disconnect WHITE air line (Figure 3, Item 4) from high range port of two-speed shift cylinder (Figure 3, Item 2) on transfer case.
7. Disconnect transfer case air lines (Figure 4, Item 2 through 5) from four-pack air solenoid (Figure 4, Item 1) located under left side of cab on frame rail.

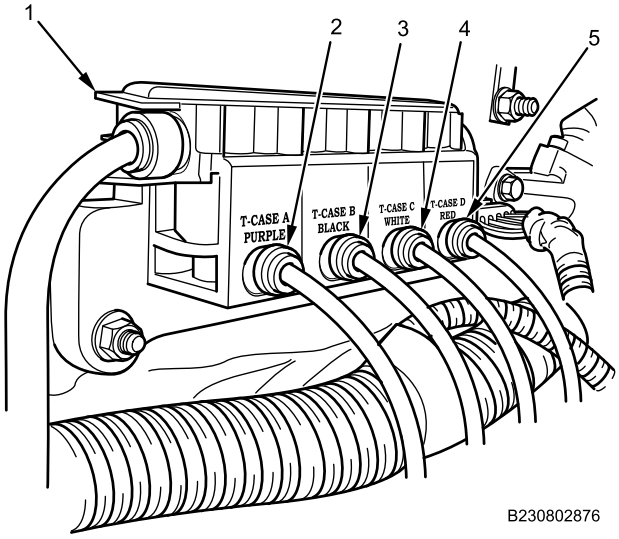

Figure 4. Transfer Case Air Line Shift Solenoids.

TRANSFER CASE AIR LINES REMOVAL AND INSTALLATION - (CONTINUED)

8. Remove cable lock straps (Figure 5, Item 2, 3, and 5) securing air lines (Figure 5, Item 1) under frame rail (Figure 5, Item 4). Discard cable lock straps (Figure 5, Item 2, 3, and 5). Remove transfer case air lines.

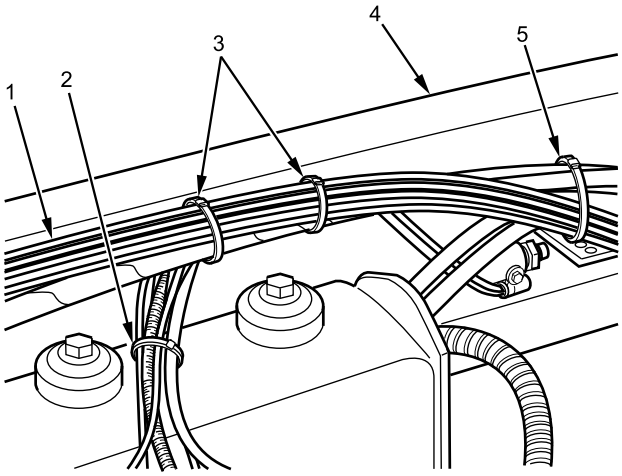

Figure 5. Transfer Case Air Line Cable Lock Straps.

END OF TASK

INSTALLATION

Table 1. 4-Pack Air Solenoid Module Air Line Connections.

AIR LINE	AIR LINE COLOR IDENTIFICATION	DESCRIPTION
2	PURPLE	Supply to transfer case low range port
3	BLACK	Supply to transfer case neutral port
4	WHITE	Supply to transfer case high range port
5	RED	Supply to transfer case front axle declutch port

1. Connect transfer case air lines (Figure 6, Item 2 through 5) to four-pack air solenoid (Figure 6, Item 1). Refer to Table 1.

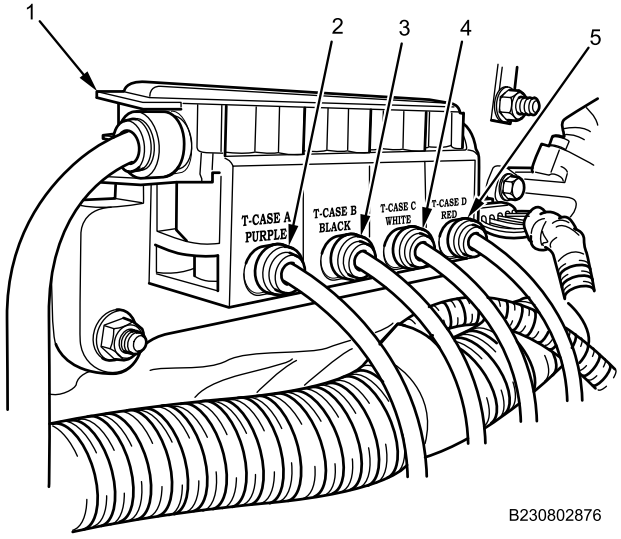

Figure 6. Transfer Case Air Line Shift Solenoids.

TRANSFER CASE AIR LINES REMOVAL AND INSTALLATION - (CONTINUED)

2. Connect PURPLE air line (Figure 7, Item 1) to low range port of two-speed shift cylinder (Figure 7, Item 2) on transfer case.

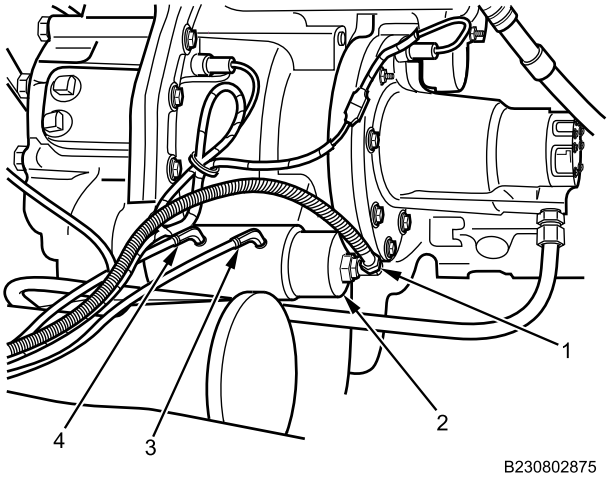

Figure 7. Two-Speed Shift Cylinder Air Line Connections.

3. Connect BLACK air line (Figure 7, Item 3) to neutral port of two-speed shift cylinder (Figure 7, Item 2) on transfer case.
4. Connect WHITE air line (Figure 7, Item 4) to high range port of two-speed shift cylinder (Figure 7, Item 2) on transfer case.
5. Install new cable lock straps (Figure 8, Item 2, 3, and 5) securing air lines (Figure 8, Item 1) under frame rail (Figure 8, Item 4).

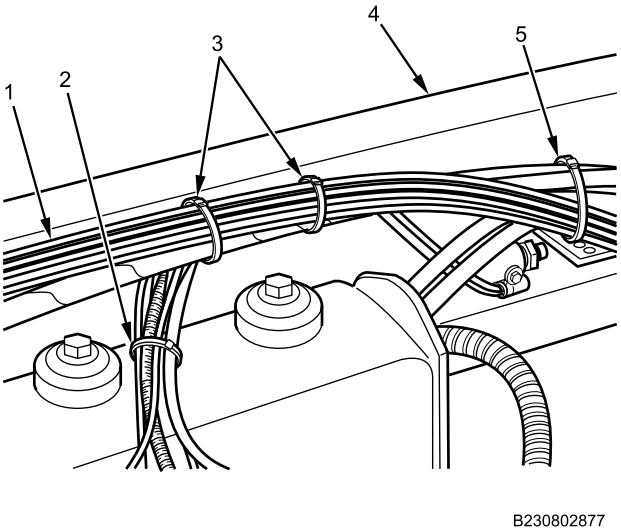

Figure 8. Transfer Case Air Line Cable Lock Straps.

TRANSFER CASE AIR LINES REMOVAL AND INSTALLATION - (CONTINUED)

6. Connect RED air line (Figure 9, Item 2) to front axle shift cylinder (Figure 9, Item 1).

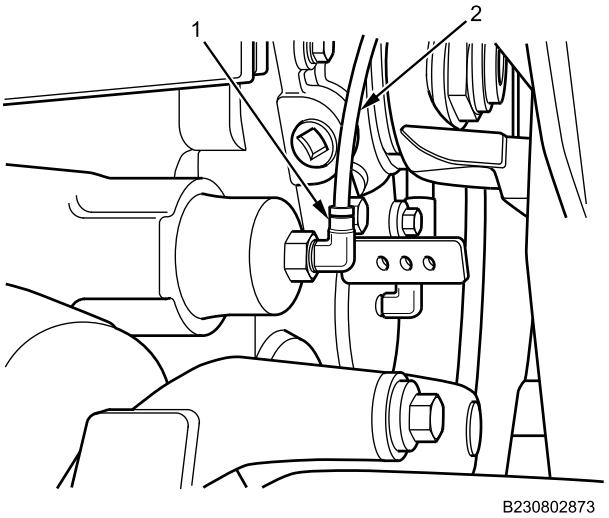

Figure 9. Front Axle Shift Cylinder Air Line.

7. Install clamp (Figure 10, Item 2) on RED front axle shift cylinder air line (Figure 10, Item 1).

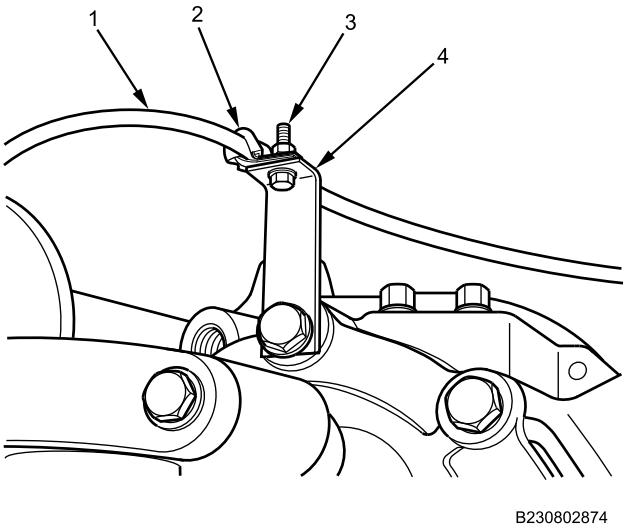

Figure 10. Front Axle Shift Cylinder Air Line Bracket.

8. Install bolt and nut (Figure 10, Item 3) on clamp (Figure 10, Item 2) and front axle shift cylinder air line bracket (Figure 10, Item 4). Tighten nut securely.

END OF TASK

FOLLOW-ON MAINTENANCE

1. Turn MAIN POWER switch on (TM 9-2355-106-10).
2. Start engine; ensure air tanks are at operating pressure (TM 9-2355-106-10).
3. Verify gauge operation (TM 9-2355-106-10).
4. Check for air leaks (TM 9-2355-106-10).
5. Remove wheel chocks (TM 9-2355-106-10).
6. Test-drive vehicle to verify transfer case operation (TM 9-2355-106-10).

TRANSFER CASE AIR LINES REMOVAL AND INSTALLATION - (CONTINUED)

7. Set transmission in NEUTRAL (N) (TM 9-2355-106-10).
8. Set parking brake (TM 9-2355-106-10).
9. Turn engine off (TM 9-2355-106-10).
10. Turn MAIN POWER switch off (TM 9-2355-106-10).
11. Install transmission to transfer case driveshaft (WP 0469)
12. Install belly armor (WP 0606).
13. Remove wheel chocks (TM 9 2355-106-10).

END OF TASK

END OF WORK PACKAGE

FIELD MAINTENANCE

4-PACK AIR SOLENOID MODULE AND SUPPORT REMOVAL AND INSTALLATION

INITIAL SETUP:

Tools and Special Tools
General Mechanic's Tool Kit (GMTK) (WP 0795, Item 37)
Wrench, torque, click, ratcheting, 15-75 lb-ft, 3/8-inch drive (WP 0795, Item 145)

Materials/Parts
Goggles, industrial (WP 0794, Item 20)
Faceshield, industrial (WP 0794, Item 16)
Grease (WP 0794, Item 22)

References
TM 9-2355-106-10
TM 9-2355-106-23P
WP 0786
WP 0782

Equipment Condition
Parking brake set (TM-9-2355-106-10)
Transmission set in NEUTRAL (N) (TM-9-2355-106-10)
Engine off (TM-9-2355-106-10)
MAIN POWER switch off (TM-9-2355-106-10)
Wheels chocked (TM-9-2355-106-10)
Air pressure drained from all air brake reservoirs (TM-9-2355-106-10)
Battery cables disconnected (WP 0404)

WARNING

Before working on air brake system or any auxiliary pressurized system, make sure air pressure has been drained from all reservoirs. Failure to comply may result in serious injury or death to personnel.

Air drain valves are under pressure. Wear protective goggles and do not place face in front of air drain valves while draining air reservoirs. Open air drain valves slowly to release air pressure gradually. Failure to comply may result in serious injury or death to personnel.

Do not disconnect any air line or fitting until system pressure has been relieved. Hoses may whip and injure personnel, and air under pressure can penetrate skin. Failure to comply may result in serious injury or death to personnel.

Do not operate vehicle with air pressure system loss. Vehicle has reduced or no braking capability and may not stop. Failure to comply may result in damage to equipment and serious injury or death to personnel.

Let air pressure build in both tanks to 100 psi (689 kPa) before releasing the parking brake. Low air pressure may affect vehicle braking capability. Failure to comply may result in injury or death to personnel.

4-PACK AIR SOLENOID MODULE AND SUPPORT REMOVAL AND INSTALLATION - (CONTINUED)

REMOVAL

1. Disconnect wiring harness connector (Figure 1, Item 3) from 4-pack air solenoid module (Figure 1, Item 2).

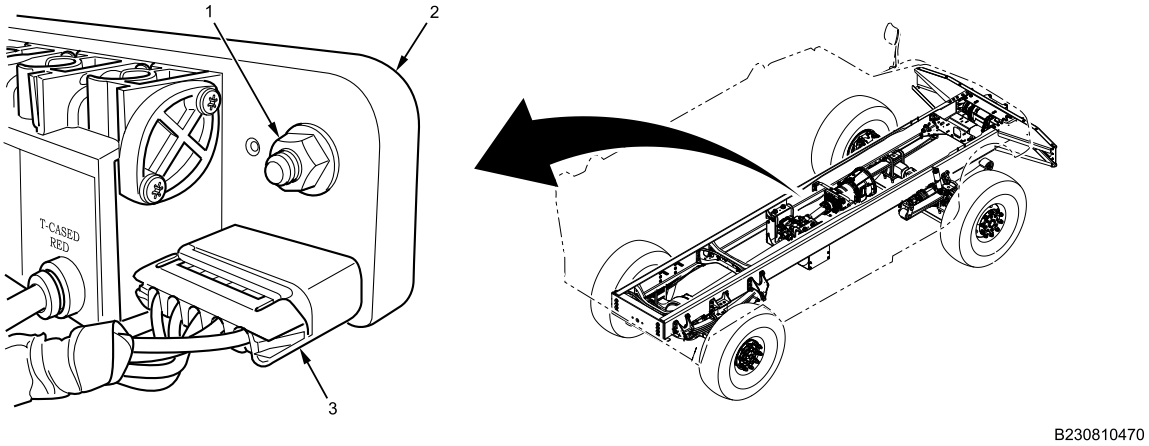

Figure 1. 4-Pack Air Solenoid Module Harness Connection.

2. Disconnect air line delivery (Figure 2, Item 1) from 4-pack air solenoid module.

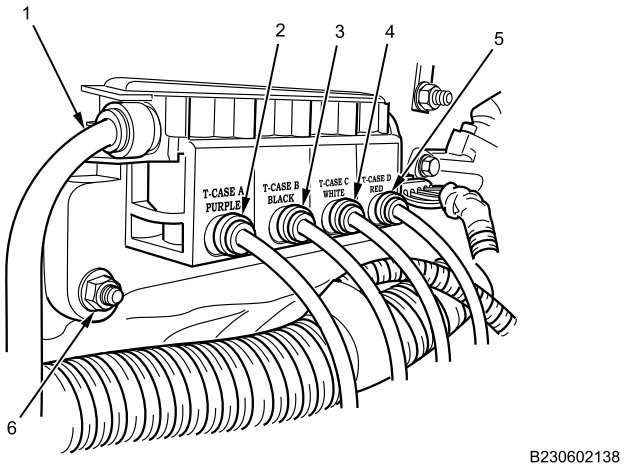

Figure 2. 4-Pack Air Solenoid Module Air Line Connections.

3. Disconnect air line supply (Figure 2, Item 2 through 5) from 4-pack air solenoid module.
4. Remove 4-pack air solenoid module nuts and bolts (Figure 1, Item 1) and (Figure 2, Item 6) from 4-pack air solenoid module (Figure 1, Item 2) and remove 4-pack air solenoid module.

END OF TASK

4-PACK AIR SOLENOID MODULE AND SUPPORT REMOVAL AND INSTALLATION - (CONTINUED)

DISASSEMBLY

1. Remove screws (Figure 3, Item 1) securing solenoid (Figure 3, Item 2) to solenoid support (Figure 3, Item 3).

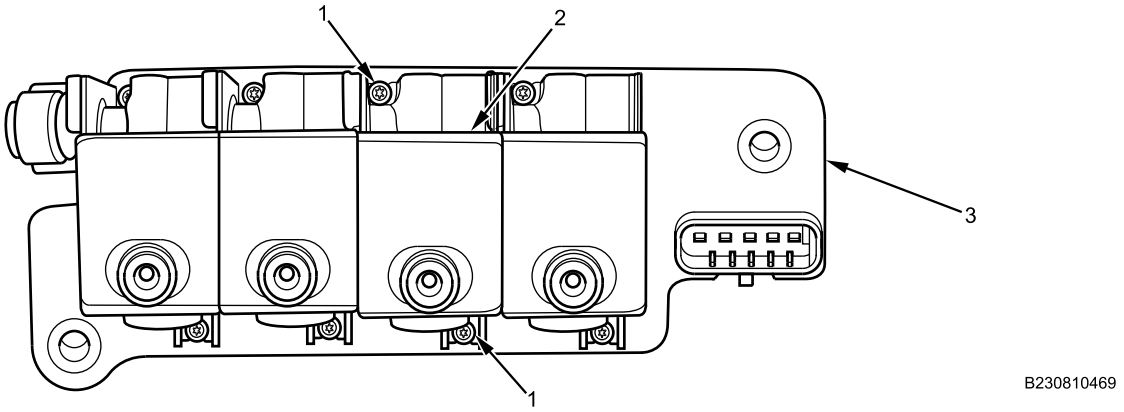

Figure 3. 4-Pack Air Solenoid Module and Support Disassembly.

2. Remove solenoid (Figure 4, Item 1) from solenoid support (Figure 4, Item 2).

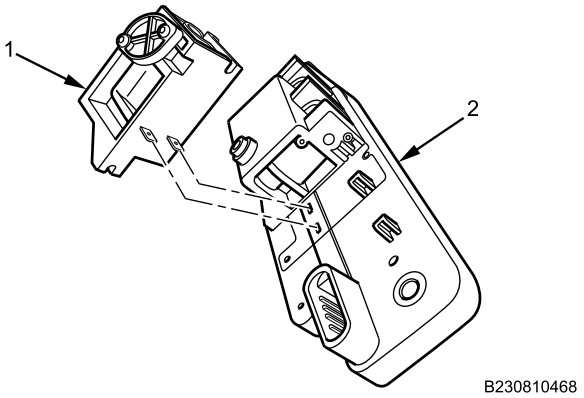

Figure 4. Solenoid Removal.

END OF TASK

4-PACK AIR SOLENOID MODULE AND SUPPORT REMOVAL AND INSTALLATION - (CONTINUED)

ASSEMBLY

1. Install solenoid (Figure 5, Item 1) on solenoid support (Figure 5, Item 2).

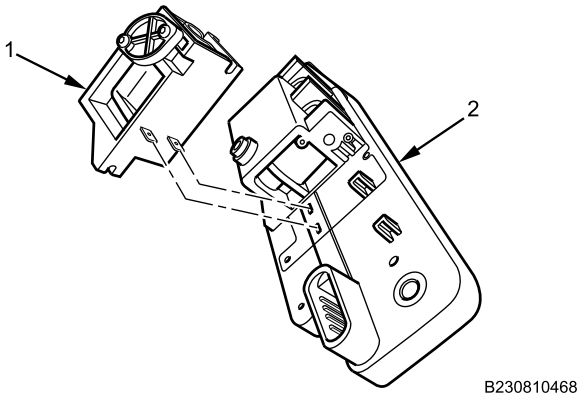

Figure 5. Solenoid Assembly.

2. Install screws (Figure 6, Item 1) securing solenoid (Figure 6, Item 2) to solenoid support (Figure 6, Item 3).

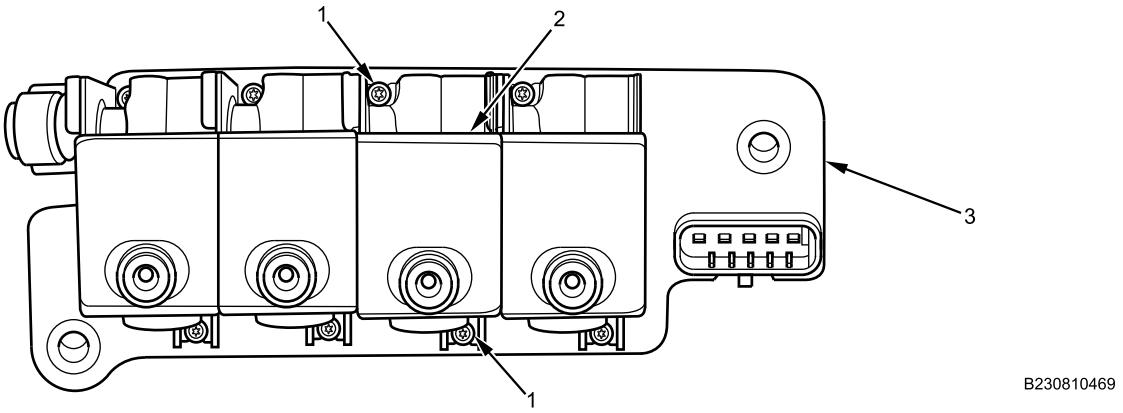

Figure 6. 4-Pack Air Solenoid Module and Support Assembly.

END OF TASK

4-PACK AIR SOLENOID MODULE AND SUPPORT REMOVAL AND INSTALLATION - (CONTINUED)

INSTALLATION

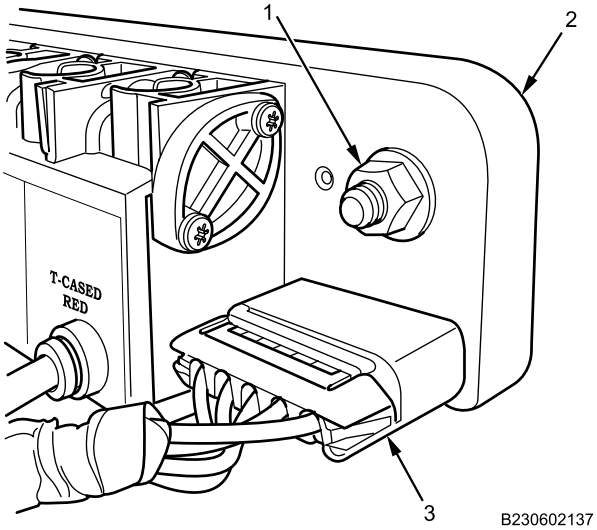

Figure 7. 4-Pack Air Solenoid Module.

WARNING

Corrosion preventive compound is toxic. Use only in well-ventilated area. Do not get in eyes; wear chemical safety goggles and full-face shield when using. Avoid contact with skin and wear rubber or plastic, solvent-resistant gloves. In case of contact, remove contaminated clothing and immediately wash area with soap and water. If compound contacts eyes, flush eyes with large amounts of water for at least 15 minutes and get immediate medical attention. If swallowed, do not induce vomiting; contact a physician immediately. Failure to comply may result in serious injury or death to personnel.

1. Apply corrosion preventive compound to 4-pack air solenoid module bolt (Figure 7, Item 1).
2. Install 4-pack air solenoid module (Figure 7, Item 2) and loosely install 4-pack air solenoid module nut and bolt (Figure 7, Item 1).

4-PACK AIR SOLENOID MODULE AND SUPPORT REMOVAL AND INSTALLATION - (CONTINUED)

3. Apply corrosion preventive compound to 4-pack air solenoid module bolt (Figure 8, Item 6).

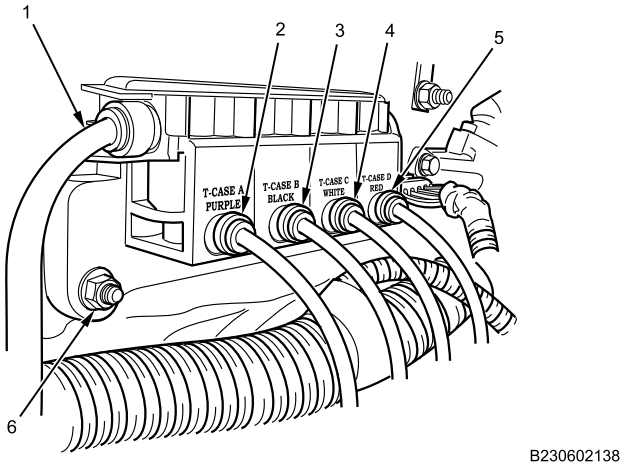

Figure 8. 4-Pack Air Solenoid Module Air Line Connections.

4. Install 4-pack air solenoid module nut and bolt (Figure 8, Item 6).
5. Torque nuts (Figure 7, Item 1) and (Figure 8, Item 6) to 18-20 lb-ft. (24-26 N•m).

Table 1. 4-Pack Air Solenoid Module Air Line Connections.

AIR LINE	AIR LINE COLOR IDENTIFICATION	DESCRIPTION
1	WHITE	Delivery from air tank
2	PURPLE	Supply to transfer case low range port
3	BLACK	Supply to transfer case neutral port
4	WHITE	Supply to transfer case high range port
5	RED	Supply to transfer case front axle declutch port

6. Connect air line supply (Figure 8, Item 2 through 5) on 4-pack air solenoid module. Refer to Table 1 for proper air line connections.
7. Connect air line delivery (Figure 8, Item 1) on 4-pack air solenoid module. Refer to Table 1 for proper air line connections.

WARNING

Dielectric grease is harmful to skin and eyes. If grease contacts eyes, rinse thoroughly and contact physician if irritation persists. If skin is contacted, wash thoroughly with soap and water. Failure to comply may result in serious injury to personnel.

8. Apply dielectric grease to 4-pack air solenoid module wiring harness connector (Figure 7, Item 3).
9. Connect wiring harness connector (Figure 7, Item 3) on 4-pack air solenoid module (Figure 7, Item 2).

END OF TASK

FOLLOW-ON MAINTENANCE

1. Connect battery cables (WP 0404).

4-PACK AIR SOLENOID MODULE AND SUPPORT REMOVAL AND INSTALLATION - (CONTINUED)

2. Turn MAIN POWER switch on (TM 9-2355-106-10).
3. Remove wheel chocks (TM 9-2355-106-10).
4. Test-drive vehicle to verify all 4-pack solenoid module electrical and air line circuit operations.
5. Set vehicle parking brake (TM 9-2355-106-10).
6. Set transmission in NEUTRAL (N) (TM 9-2355-106-10).
7. Turn engine off (TM 9-2355-106-10).
8. Turn MAIN POWER switch off (TM 9-2355-106-10).

END OF TASK

END OF WORK PACKAGE

FIELD MAINTENANCE

TRANSFER CASE OIL COOLER HOSE REMOVAL AND INSTALLATION

INITIAL SETUP:

Tools and Special Tools
General Mechanic's Tool Kit (GMTK) (WP 0795, Item 37)
Pan, drain, 5-gal. capacity (WP 0795, Item 75)

Materials/Parts
Cable lock strap - (7) (WP 0796, Item 120)
Gloves (WP 0794, Item 18)
Goggles, industrial (WP 0794, Item 20)
Lubricating oil (WP 0794, Item 27)

References
TM 9-2355-106-10
TM 9-2355-106-23P
WP 0782

Equipment Condition
Parking brake set (TM 9-2355-106-10)
Transmission set in NEUTRAL (N) (TM 9-2355-106-10)
Engine off (TM 9-2355-106-10)
MAIN POWER switch off (TM 9-2355-106-10)
Wheels chocked (TM 9-2355-106-10)

WARNING

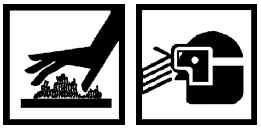

During normal vehicle operation, transfer case and oil cooler can become very hot. Allow transfer case and oil cooler to cool prior to servicing. Wear safety goggles, work gloves, and protective clothing. Use extreme caution when opening drain valves and removing bolts. Failure to comply may result in serious injury to personnel.

TRANSFER CASE OIL COOLER HOSE REMOVAL AND INSTALLATION - (CONTINUED)

NOTE

Note orientation and routing of transfer case oil cooler hoses to ensure proper installation.

REMOVAL

1. Position drain pan under transfer case oil cooler upper angle fitting (Figure 1, Item 1).

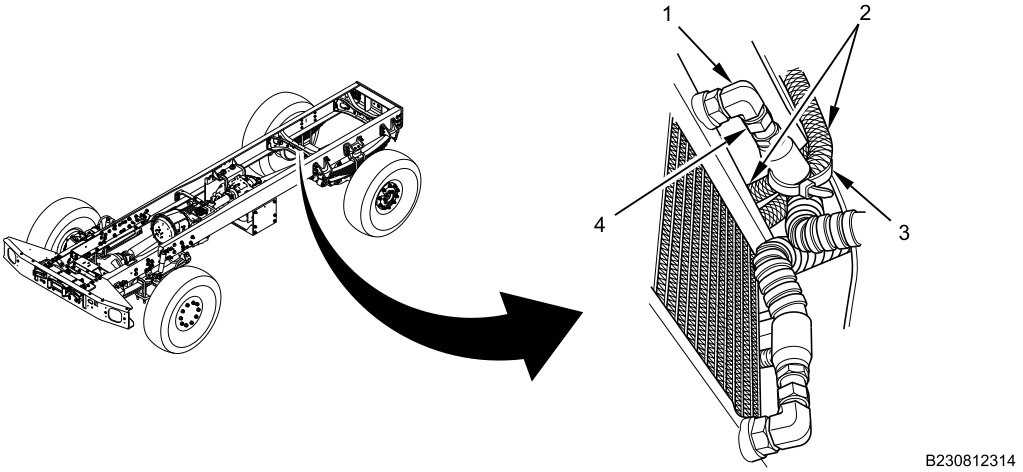

Figure 1. Transfer Case Oil Cooler Return Hose.

2. Remove transfer case oil cooler return hose (Figure 1, Item 4) from transfer case oil cooler upper angle fitting (Figure 1, Item 1), allowing fluid to drain out of oil cooler and hose into drain pan.
3. Remove cable lock strap (Figure 1, Item 3) from transfer case oil cooler return hose (Figure 1, Item 4) and Fire Suppression System (FSS) hoses (Figure 1, Item 2). Discard cable lock strap (Figure 1, Item 3).
4. Remove transfer case oil cooler feed hose (Figure 2, Item 1) from transfer case oil cooler lower angle fitting (Figure 2, Item 2), allowing fluid to drain out of oil cooler and hose into drain pan.

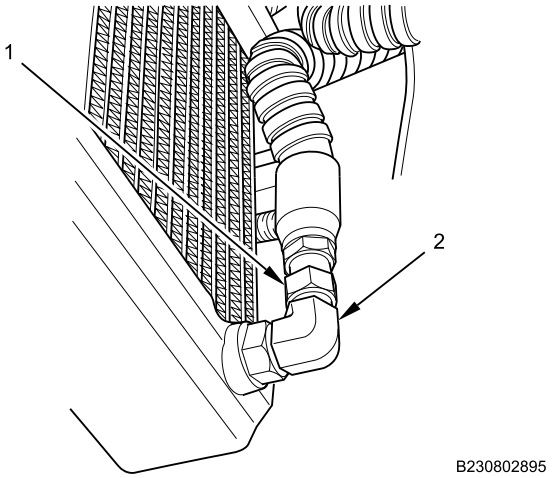

Figure 2. Transfer Case Oil Cooler Feed Hose.

TRANSFER CASE OIL COOLER HOSE REMOVAL AND INSTALLATION - (CONTINUED)

5. Position drain pan under transfer case oil cooler return hose (Figure 3, Item 2) at rear of transfer case.

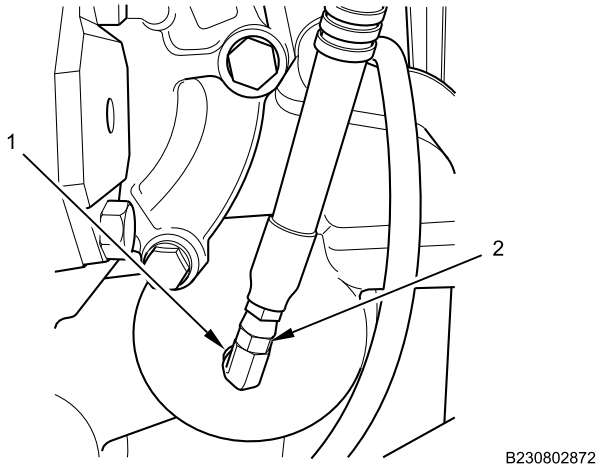

Figure 3. Transfer Case Oil Cooler Return Hose.

6. Disconnect transfer case oil cooler return hose (Figure 3, Item 2) from transfer case oil cooler return angle fitting (Figure 3, Item 1), allowing fluid to drain out of transfer case and return hose into drain pan.
7. Remove cable lock strap (Figure 4, Item 1) from bundle that includes transfer case oil cooler return hose (Figure 4, Item 2) on left frame rail behind transfer case mounting bracket. Discard cable lock strap (Figure 4, Item 1).

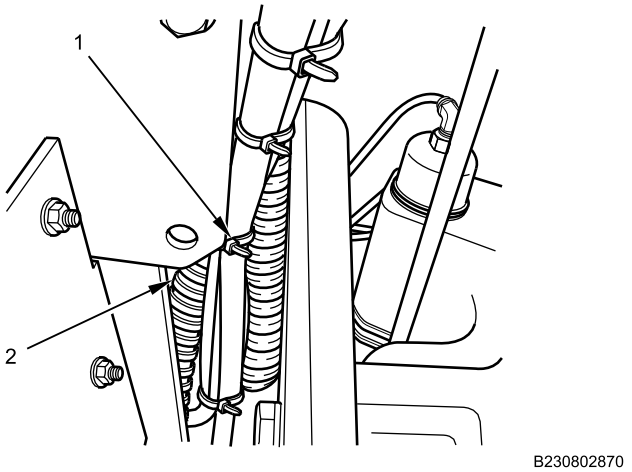

Figure 4. Transfer Case Oil Cooler Return Hose Routing.

TRANSFER CASE OIL COOLER HOSE REMOVAL AND INSTALLATION - (CONTINUED)

8. Position drain pan under transfer case oil cooler feed hose (Figure 5, Item 2) at front of transfer case.

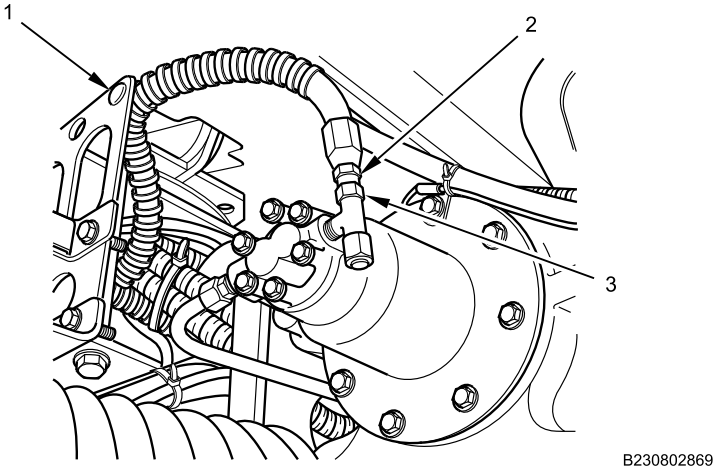

Figure 5. Transfer Case Oil Cooler Feed Hose.

9. Disconnect transfer case oil cooler feed hose (Figure 5, Item 2) from transfer case oil pump output fitting (Figure 5, Item 3), allowing fluid to drain out of transfer case and feed hose into drain pan.
10. Remove transfer case oil cooler feed hose retainer (Figure 5, Item 1) from air dryer bracket and transfer case oil cooler feed hose (Figure 5, Item 2).
11. Remove cable lock strap (Figure 6, Item 1) from hose bundle attached to air dryer bracket (Figure 6, Item 8). Discard cable lock strap (Figure 6, Item 1).

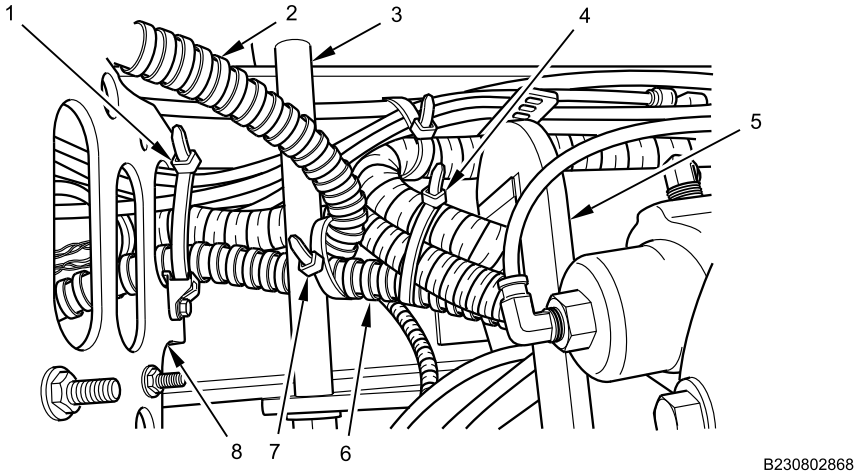

Figure 6. Transfer Case Oil Cooler Hose Routing.

12. Remove cable lock strap (Figure 6, Item 7) from oil cooler feed hose (Figure 6, Item 2) and oil cooler return hose (Figure 6, Item 6) behind body mount bolt (Figure 6, Item 3). Discard cable lock strap (Figure 6, Item 7).
13. Remove cable lock strap (Figure 6, Item 4) from oil cooler return hose (Figure 6, Item 6) and wiring harness bundle. Discard cable lock strap (Figure 6, Item 4).
14. Remove oil cooler return hose (Figure 6, Item 6) from transfer case mounting bracket (Figure 6, Item 5).

TRANSFER CASE OIL COOLER HOSE REMOVAL AND INSTALLATION - (CONTINUED)

15. Remove cable lock strap (Figure 7, Item 2) from harness bundle retainer (Figure 7, Item 3). Discard cable lock strap (Figure 7, Item 2).

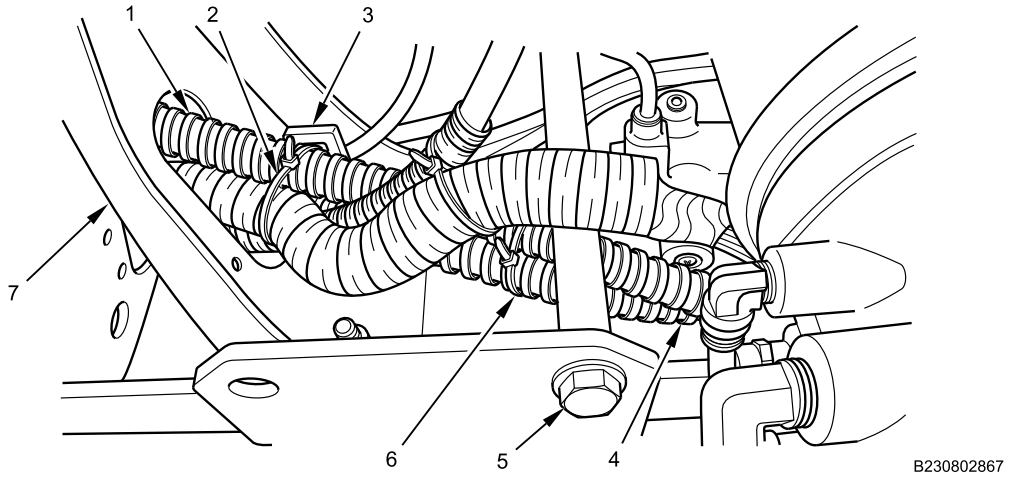

Figure 7. Transfer Case Oil Cooler Hose Routing.

16. Remove cable lock strap (Figure 7, Item 6) from oil cooler hoses (Figure 7, Item 1 and 4). Discard cable lock strap (Figure 7, Item 6).
17. Remove oil cooler hoses (Figure 7, Item 1 and 4) from frame crossmember (Figure 7, Item 7).
18. Remove oil cooler hoses (Figure 7, Item 1 and 4) from behind body mount bolt (Figure 7, Item 5).
19. Remove transfer case oil cooler hoses (Figure 7, Item 1 and 4) from under vehicle.
20. Remove drain pan from under vehicle.

END OF TASK

TRANSFER CASE OIL COOLER HOSE REMOVAL AND INSTALLATION - (CONTINUED)

INSTALLATION

1. Route transfer case oil cooler return hose (Figure 8, Item 4) on top of harness retainer (Figure 8, Item 3) and between transfer case mounting bracket (Figure 8, Item 1) and left frame rail (Figure 8, Item 2).

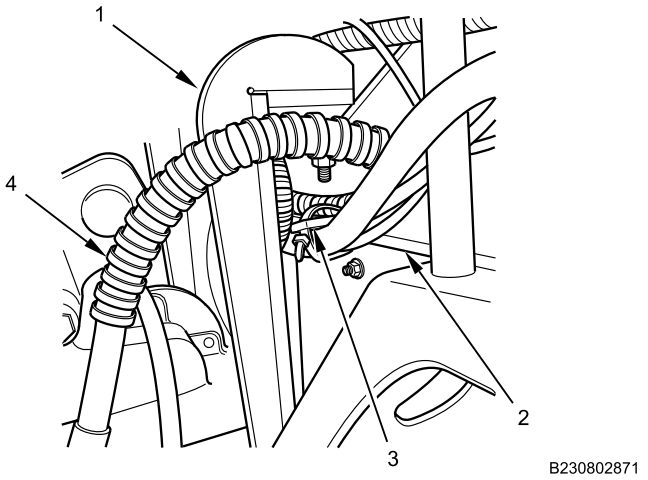

Figure 8. Transfer Case Oil Cooler Return Hose Routing.

2. Connect transfer case oil cooler return hose (Figure 9, Item 2) to transfer case oil cooler return fitting (Figure 9, Item 1). Tighten transfer case oil cooler return hose securely.

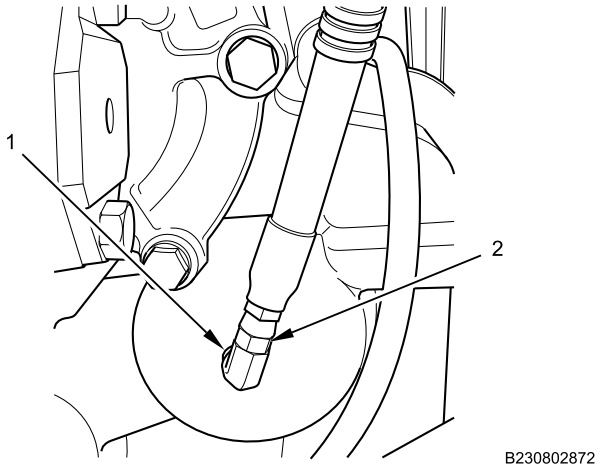

Figure 9. Transfer Case Oil Cooler Return Hose.

3. Connect transfer case oil cooler feed hose (Figure 10, Item 2) to transfer case oil pump output fitting (Figure 10, Item 3).

TRANSFER CASE OIL COOLER HOSE REMOVAL AND INSTALLATION - (CONTINUED)

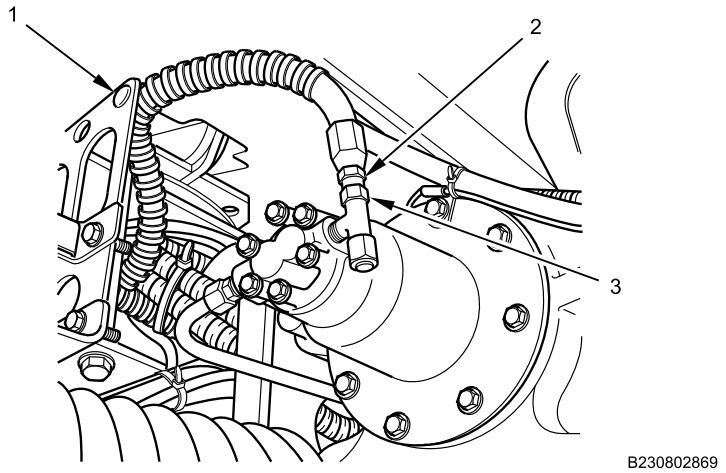

Figure 10. Transfer Case Oil Cooler Feed Hose.

4. Install transfer case oil cooler feed hose retainer (Figure 10, Item 1) to transfer case oil cooler feed hose (Figure 10, Item 2) and air dryer bracket. Tighten transfer case oil cooler feed hose securely.
5. Route oil cooler return hose (Figure 11, Item 6) from transfer case mounting bracket (Figure 11, Item 5), behind body mount bolt (Figure 11, Item 3), and through air dryer bracket (Figure 11, Item 8).

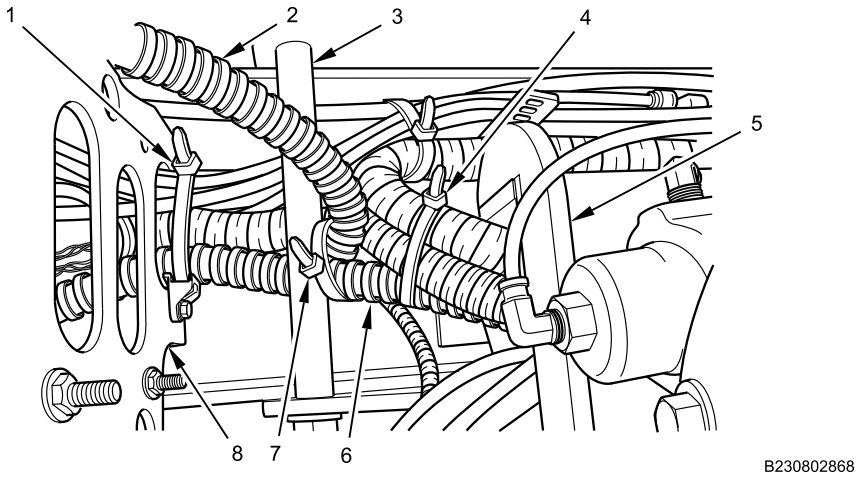

Figure 11. Transfer Case Oil Cooler Hose Routing.

6. Route oil cooler feed hose (Figure 11, Item 2) behind body mount bolt (Figure 11, Item 3), and through air dryer bracket (Figure 11, Item 8).
7. Install new cable lock strap (Figure 11, Item 1) on hose bundle attached to air dryer bracket (Figure 11, Item 8).
8. Install new cable lock strap (Figure 11, Item 7) on oil cooler feed hose (Figure 11, Item 2) and oil cooler return hose (Figure 11, Item 6) behind body mount bolt (Figure 11, Item 3).
9. Install new cable lock strap (Figure 11, Item 4) on oil cooler return hose (Figure 11, Item 6) and wiring harness bundle.

TRANSFER CASE OIL COOLER HOSE REMOVAL AND INSTALLATION - (CONTINUED)

10. Install new cable lock strap (Figure 12, Item 1) on bundle that includes transfer case oil cooler return hose (Figure 12, Item 2) on left frame rail behind transfer case mounting bracket.

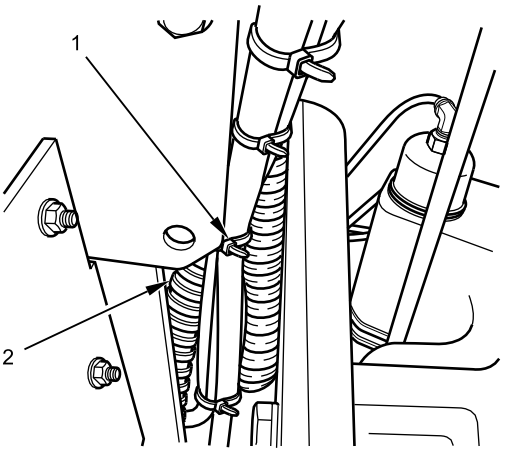

Figure 12. Transfer Case Oil Cooler Return Hose Routing.

11. Route oil cooler hoses (Figure 13, Item 1 and 4) behind body mount bolt (Figure 13, Item 5).

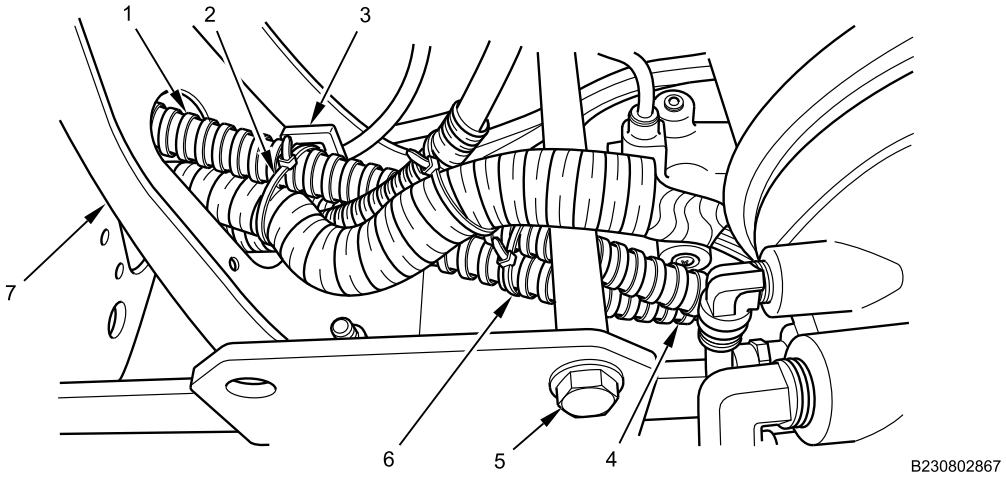

Figure 13. Transfer Case Oil Cooler Hose Routing.

12. Route oil cooler hoses (Figure 13, Item 1 and 4) through frame crossmember (Figure 13, Item 7).
13. Install new cable lock strap (Figure 13, Item 2) on harness bundle retainer (Figure 13, Item 3) and oil cooler hose and harness bundle.
14. Install new cable lock strap (Figure 13, Item 6) on oil cooler hose (Figure 13, Item 1 and 4) bundle.
15. Install transfer case oil cooler feed hose (Figure 14, Item 1) on transfer case oil cooler angle lower fitting (Figure 14, Item 2). Tighten transfer case oil cooler feed hose securely.

TRANSFER CASE OIL COOLER HOSE REMOVAL AND INSTALLATION - (CONTINUED)

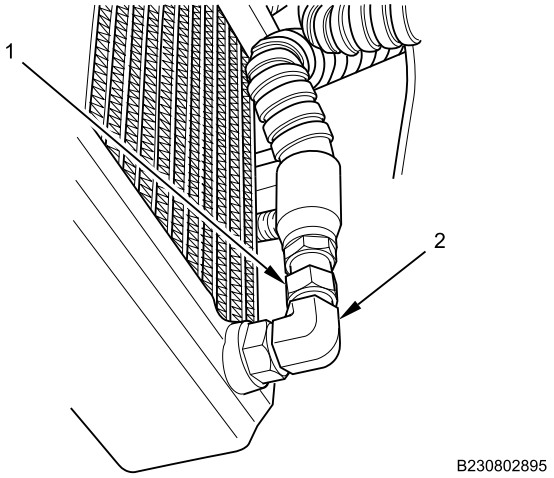

Figure 14. Transfer Case Oil Cooler Feed Hose.

16. Connect transfer case oil cooler return hose (Figure 15, Item 4) on transfer case oil cooler upper angle fitting (Figure 15, Item 1). Tighten transfer case oil cooler return hose securely.

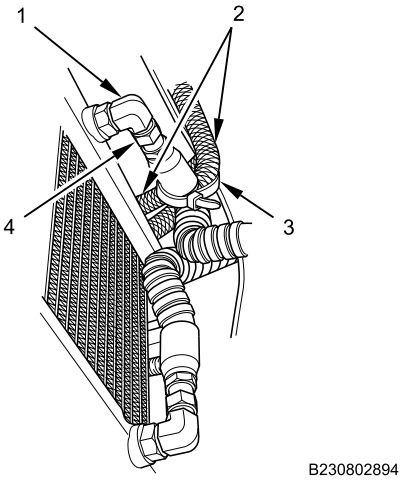

Figure 15. Transfer Case Oil Cooler Return Hose.

17. Install new cable lock strap (Figure 15, Item 3) on transfer case oil cooler return hose (Figure 15, Item 4) and Fire Suppression System (FSS) hoses (Figure 15, Item 2).

END OF TASK

TRANSFER CASE OIL COOLER HOSE REMOVAL AND INSTALLATION - (CONTINUED)

FOLLOW-ON MAINTENANCE

1. Check and fill transfer case with proper fluid (TM 9-2355-106-10).
2. Turn MAIN POWER switch on (TM 9-2355-106-10).
3. Start engine; run to operating temperature (TM 9-2355-106-10).
4. Check for leaks.
5. Remove wheel chocks (TM 9-2355-106-10).
6. Test-drive vehicle to verify transfer case operation (TM 9-2355-106-10).
7. Set transmission in NEUTRAL (N) (TM 9-2355-106-10).
8. Set parking brake (TM 9-2355-106-10).
9. Turn engine off (TM 9-2355-106-10).
10. Turn MAIN POWER switch off (TM 9-2355-106-10).
11. Chock wheels (TM 9-2355-106-10).
12. Check for leaks.
13. Check fluid level after cool-down (TM 9-2355-106-10).
14. Remove wheel chocks (TM 9-2355-106-10).

END OF TASK

END OF WORK PACKAGE

FIELD MAINTENANCE

TRANSFER CASE DRAIN/FILL PROCEDURE

INITIAL SETUP:

Tools and Special Tools
General Mechanic's Tool Kit (GMTK) (WP 0795, Item 37)
Funnel, flexible spout, 1 qt. capacity (WP 0795, Item 35)
Wrench, torque, click, ratcheting, 15-75 lb-ft, 3/8-inch drive (WP 0795, Item 145)
Pan, drain, 5-gal. capacity (WP 0795, Item 75)

Materials/Parts
Lubricating oil (WP 0794, Item 119)
Gloves (WP 0794, Item 18)
Goggles, industrial (WP 0794, Item 20)

References
TM 9-2355-106-10
TM 9-2355-106-23P
WP 0782

Equipment Condition
Parking brake set (TM 9-2355-106-10)
Transmission set in NEUTRAL (N) (TM 9-2355-106-10)
Engine off (TM 9-2355-106-10)
MAIN POWER switch off (TM 9-2355-106-10)
Wheels chocked (TM 9-2355-106-10)

WARNING

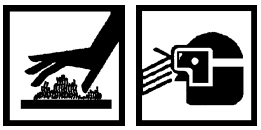

During normal vehicle operation, transfer case and oil cooler can become very hot. Allow transfer case and oil cooler to cool prior to servicing. Wear safety goggles, work gloves, and protective clothing. Use extreme caution when opening drain valves and removing bolts. Failure to comply may result in serious injury to personnel.

TRANSFER CASE DRAIN/FILL PROCEDURE - (CONTINUED)

DRAIN

1. Place drain pan under transfer case.

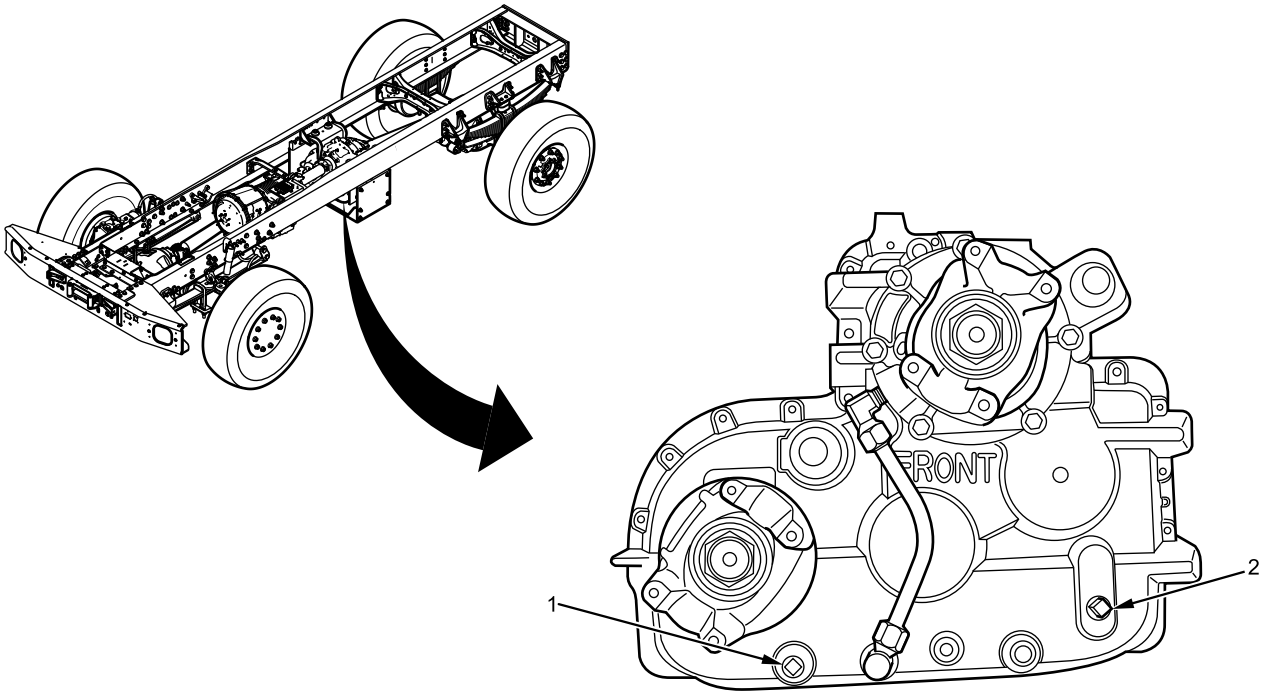

Figure 1. Transfer Case Drain and Fill Locations.

2. Remove magnetic drain plug (Figure 1, Item 1) from transfer case, allowing fluid to drain into pan.
3. Remove transfer case fill plug (Figure 1, Item 2).

END OF TASK

FILL

NOTE

Ensure transfer case magnetic drain plug, fill plug, and surrounding areas are clean upon installation.

Refer to table below for transfer case fluid usage.

Table 1. Equipment Specification Capacities Table.

ITEM	SPECIFICATION
Transfer Case – w/Cooler: MTC4210 GCS	6 qts (5.7 L) (SAE 80W-90)
Transfer Case – w/Cooler: MTC4210XL-100	8 qts (7.6 L) (SAE 80W-90)

TRANSFER CASE DRAIN/FILL PROCEDURE - (CONTINUED)

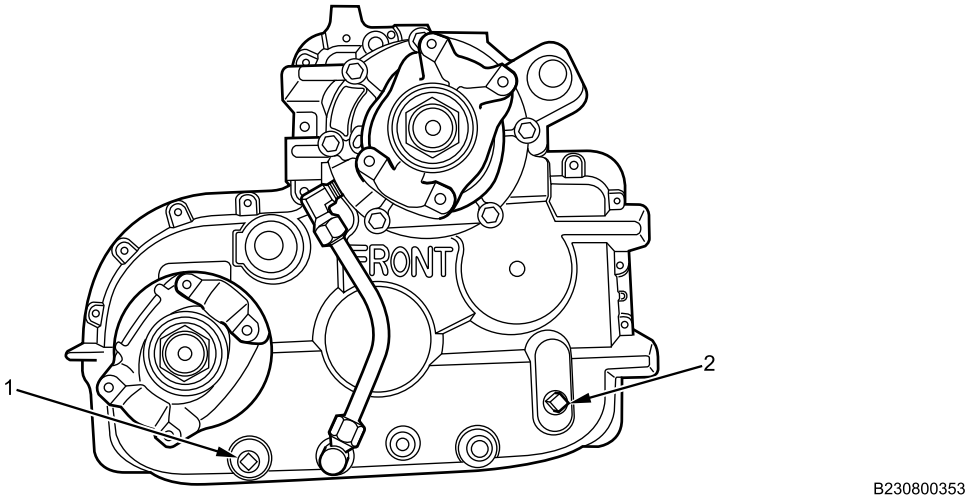

Figure 2. Transfer Case Drain and Fill Locations.

1. Install magnetic drain plug (Figure 2, Item 1) and torque to 35-50 lb-ft (48-68 N•m).
2. Fill transfer case with recommended fluid.
3. Install transfer case fill plug (Figure 2, Item 2) and torque to 35-50 lb-ft (48-68 N•m).
4. Remove drain pan.

END OF TASK

FOLLOW-ON MAINTENANCE

1. Turn MAIN POWER switch on (TM 9-2355-106-10).
2. Start engine; run to operating temperature (TM 9-2355-106-10).
3. Remove wheel chocks (TM 9-2355-106-10).
4. Test-drive vehicle and verify transfer case operation (TM 9-2355-106-10).
5. Set transmission in NEUTRAL (N) (TM 9-2355-106-10).
6. Set parking brake (TM 9-2355-106-10).
7. Turn engine off (TM 9-2355-106-10).
8. Turn MAIN POWER switch off (TM 9-2355-106-10).
9. Chock wheels (TM 9-2355-106-10).
10. Check transfer case oil level after cool-down (TM 9-2355-106-10).
11. Remove wheel chocks (TM 9-2355-106-10).

END OF TASK

END OF WORK PACKAGE

FIELD MAINTENANCE

TRANSFER CASE OIL COOLER REMOVAL AND INSTALLATION

INITIAL SETUP:

Tools and Special Tools
General Mechanic's Tool Kit (GMTK) (WP 0795, Item 37)
Pan, drain, 5-gal. capacity (WP 0795, Item 75)

Materials/Parts
Lubricating oil (WP 0794, Item 29WP 0794, Item 30)
Goggles, industrial (WP 0794, Item 20)
Gloves (WP 0794, Item 19)
Cable lock strap (WP 0796, Item 104)

References
TM 9-2355-106-10
TM 9-2355-106-23P
WP 0782

Equipment Condition
Parking brake set (TM 9-2355-106-10)
Transmission set in NEUTRAL (N) (TM 9-2355-106-10)
Engine off (TM 9-2355-106-10)
MAIN POWER switch off (TM 9-2355-106-10)
Wheels chocked (TM 9-2355-106-10)

WARNING

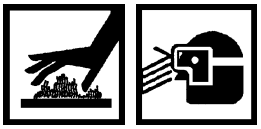

During normal vehicle operation, transfer case and oil cooler can become very hot. Allow transfer case and oil cooler to cool prior to servicing oil cooler. Wear safety goggles, work gloves, and protective clothing. Use extreme caution when opening drain valves and removing bolts. Failure to comply may result in serious injury to personnel.

NOTE

Note orientation and routing of transfer case oil cooling hoses to ensure proper installation.

TRANSFER CASE OIL COOLER REMOVAL AND INSTALLATION - (CONTINUED)

REMOVAL

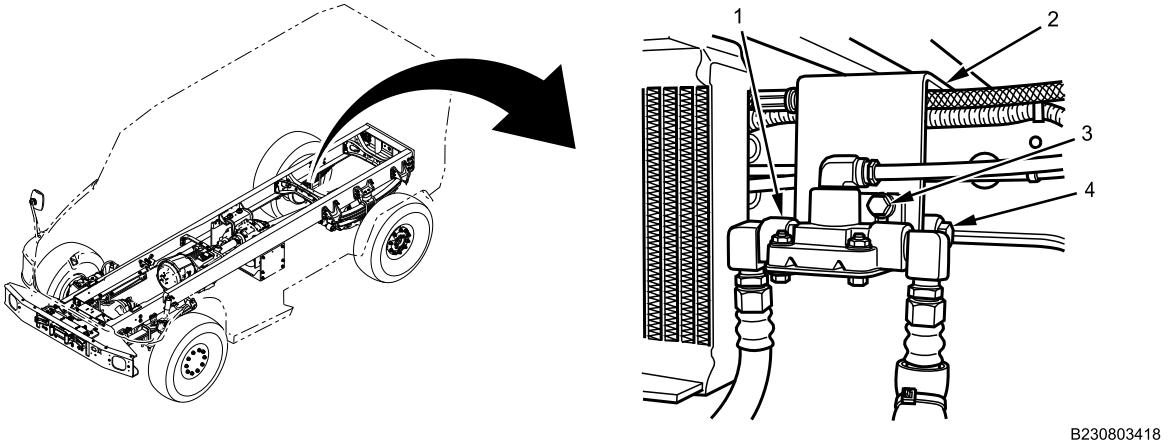

Figure 1. Transfer Case Oil Cooler and Air Brake Quick Release Valves Location.

1. Remove two bolts (Figure 1, Item 3) and nuts from air brake valve mounting bracket (Figure 1, Item 2). Right bolt shown, left bolt hidden from view.
2. Remove front and rear air brake quick release valves (Figure 1, Item 1 and 4) from air brake valve mounting bracket (Figure 1, Item 2).

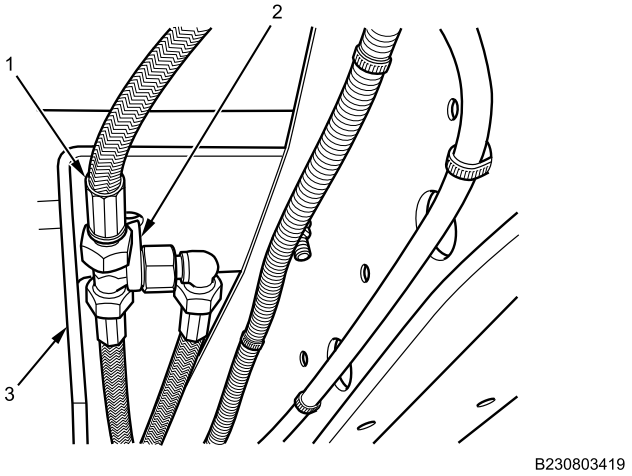

Figure 2. Air Brake Quick Release Valve Mounting Bracket.

3. Cut cable lock strap (Figure 2, Item 2) from Fire Suppression System (FSS) manifold (Figure 2, Item 1) and air brake valve mounting bracket (Figure 2, Item 3). Discard cable lock strap (Figure 2, Item 2).
4. Position drain pan under transfer case oil cooler (Figure 3, Item 3).
5. Remove lower and upper transfer case cooling hoses (Figure 3, Item 1 and 2) from transfer case oil cooler (Figure 3, Item 3), allowing fluid to drain out of oil cooler and hoses into drain pan.

TRANSFER CASE OIL COOLER REMOVAL AND INSTALLATION - (CONTINUED)

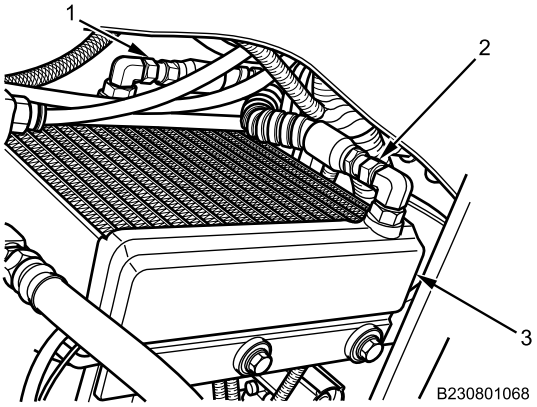

Figure 3. Transfer Case Oil Cooler and Hoses.

6. Remove two upper transfer case oil cooler mounting nuts and bolts (Figure 4, Item 1) from transfer case oil cooler bracket (Figure 4, Item 4).
7. Remove two lower transfer case oil cooler mounting nuts (Figure 4, Item 3) and bolts from transfer case oil cooler bracket (Figure 4, Item 4).
8. Remove transfer case oil cooler (Figure 4, Item 2) from transfer case oil cooler bracket (Figure 4, Item 4).

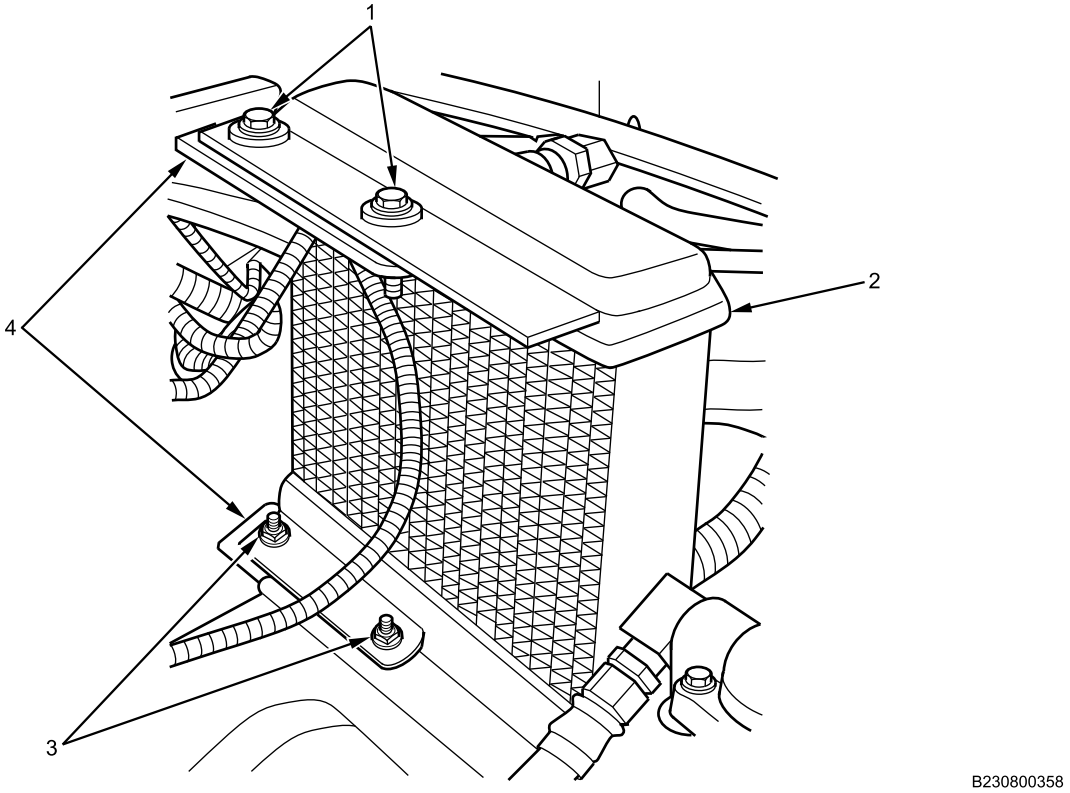

Figure 4. Transfer Case Oil Cooler Mounting.

END OF TASK

TRANSFER CASE OIL COOLER REMOVAL AND INSTALLATION - (CONTINUED)

INSTALLATION

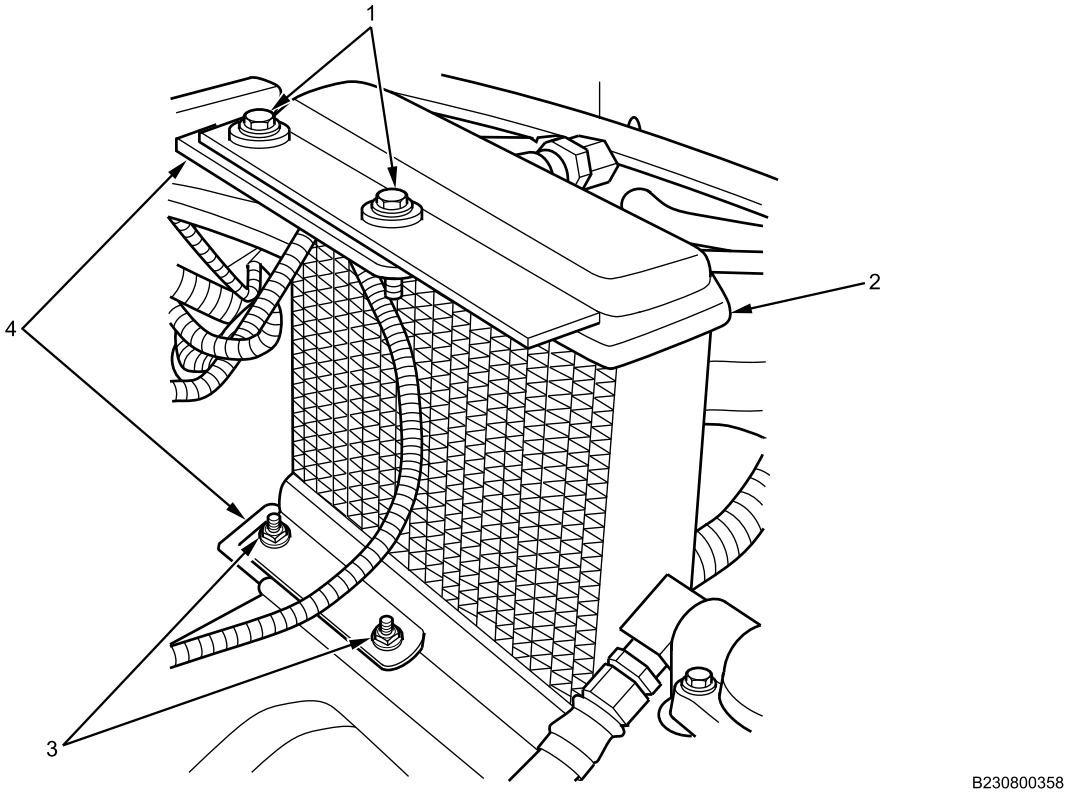

Figure 5. Transfer Case Oil Cooler Mounting.

1. Install transfer case oil cooler (Figure 5, Item 2) on bracket (Figure 5, Item 4).
2. Install two lower bolts and nuts (Figure 5, Item 3) on transfer case oil cooler bracket (Figure 5, Item 4) and tighten securely.
3. Install two upper bolts (Figure 5, Item 1) and nuts on transfer case oil cooler bracket (Figure 5, Item 4) and tighten securely.

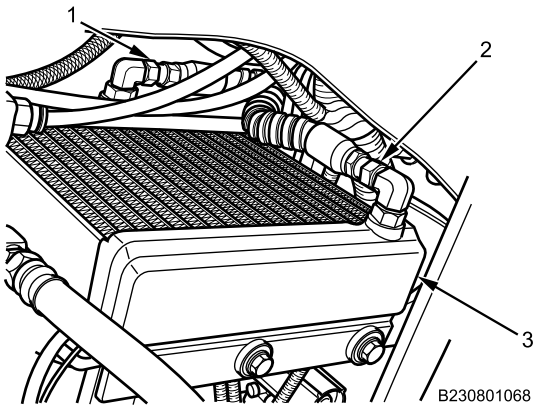

Figure 6. Transfer Case Oil Cooler and Hoses.

4. Install transfer case cooling hoses (Figure 6, Item 1 and 2) on transfer case oil cooler (Figure 6, Item 3) and tighten securely.

TRANSFER CASE OIL COOLER REMOVAL AND INSTALLATION - (CONTINUED)

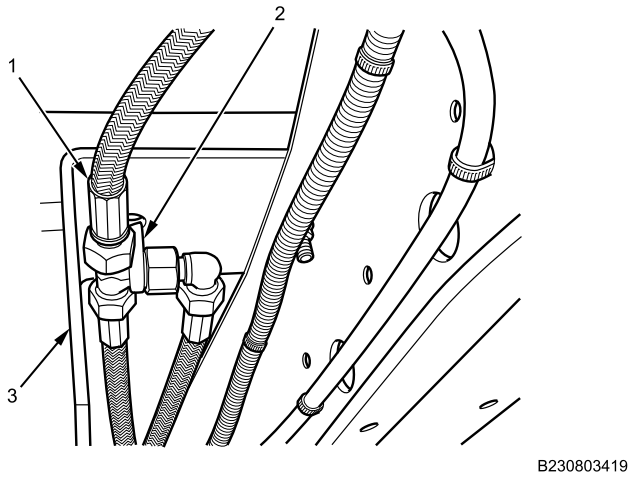

Figure 7. Air Brake Quick Release Valve Mounting Bracket.

5. Secure FSS manifold (Figure 7, Item 1) to air brake valve mounting bracket (Figure 7, Item 3) with new cable lock strap (Figure 7, Item 2).

WARNING

Ensure air lines and air line fittings are clean and are not damaged. Ensure air lines are fully engaged in quick connect fittings. Loose or leaking connections could degrade braking system performance or cause brakes to fail completely. Failure to comply may result in damage to equipment and serious injury or death to personnel.

6. Install front and rear air brake quick release valves (Figure 8, Item 1 and 4) on air brake valve mounting bracket (Figure 8, Item 2) with two bolts (Figure 8, Item 3) and nuts and tighten securely. Right bolt shown, left bolt hidden from view.

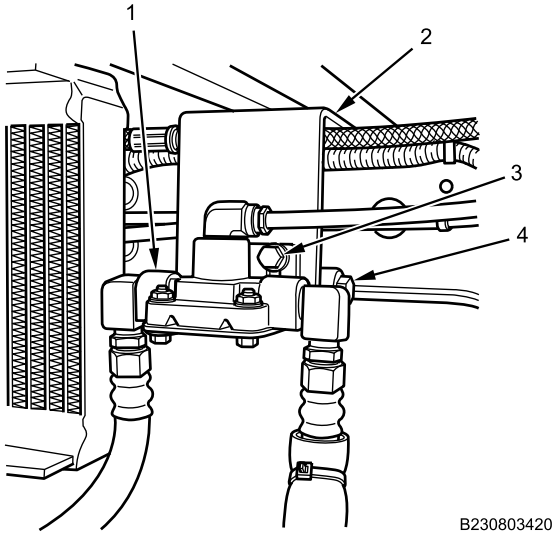

Figure 8. Rear Air Brake Quick Release Valve.

END OF TASK

TRANSFER CASE OIL COOLER REMOVAL AND INSTALLATION - (CONTINUED)

FOLLOW-ON MAINTENANCE

1. Check and fill transfer case with proper fluid (WP 0466).
2. Turn MAIN POWER switch on (TM 9-2355-106-10).
3. Start engine; run to operating temperature (TM 9-2355-106-10).
4. Check for leaks.
5. Remove wheel chocks (TM 9-2355-106-10).
6. Test-drive vehicle to verify transfer case operation (TM 9-2355-106-10).
7. Set parking brake (TM 9-2355-106-10).
8. Set transmission in NEUTRAL (N) (TM 9-2355-106-10).
9. Turn engine off (TM 9-2355-106-10).
10. Turn MAIN POWER switch off (TM 9-2355-106-10).
11. Chock wheels (TM 9-2355-106-10).
12. Check for leaks.
13. Check fluid level after cool-down (WP 0466).
14. Remove wheel chocks (TM 9-2355-106-10).

END OF TASK

END OF WORK PACKAGE

FIELD MAINTENANCE

PROP SHAFT REMOVAL AND INSTALLATION

INITIAL SETUP:

Tools and Special Tools
General Mechanic's Tool Kit (GMTK) (WP 0795, Item 37)
Wrench, torque, 1/2-in drive, 50-250 ft-lb (WP 0795, Item 143)

Materials/Parts
Screw, cap - (4 per input prop shaft yoke) (WP 0796, Item 47)
Bolt - (4 per output prop shaft yoke) (WP 0796, Item 128)

Personnel Required
Maintainer - (2)

References
TM 9-2355-106-10
TM 9-2355-106-23P
WP 0786
WP 0782

Equipment Condition
Parking brake set (TM 9-2355-106-10)
Transmission set in NEUTRAL (N) (TM 9-2355-106-10)
Engine off (TM 9-2355-106-10)
MAIN POWER switch off (TM 9-2355-106-10)
Wheels chocked (TM 9-2355-106-10)
Belly armor removed (forward shafts only) (WP 0606)

NOTE

Note orientation of prop shafts to ensure proper installation.

REMOVAL

1. Remove four mounting bolts (Figure 1, Item 1) and two bearing straps (Figure 1, Item 4) from forward or rear output yokes (Figure 1, Item 3). Discard bolts (Figure 1, Item 1).

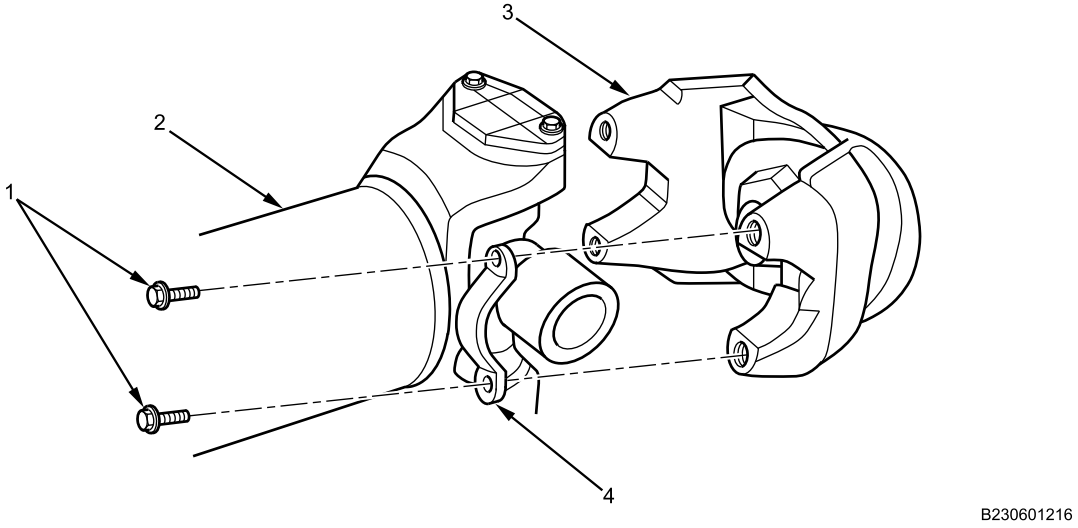

Figure 1. Prop Shaft.

2. Repeat step 1 for opposite end of prop shaft (Figure 1, Item 2).
3. Remove prop shaft (Figure 1, Item 2) from vehicle.

END OF TASK

PROP SHAFT REMOVAL AND INSTALLATION - (CONTINUED)

INSTALLATION

1. Position prop shaft (Figure 2, Item 2) on output yoke (Figure 2, Item 3).

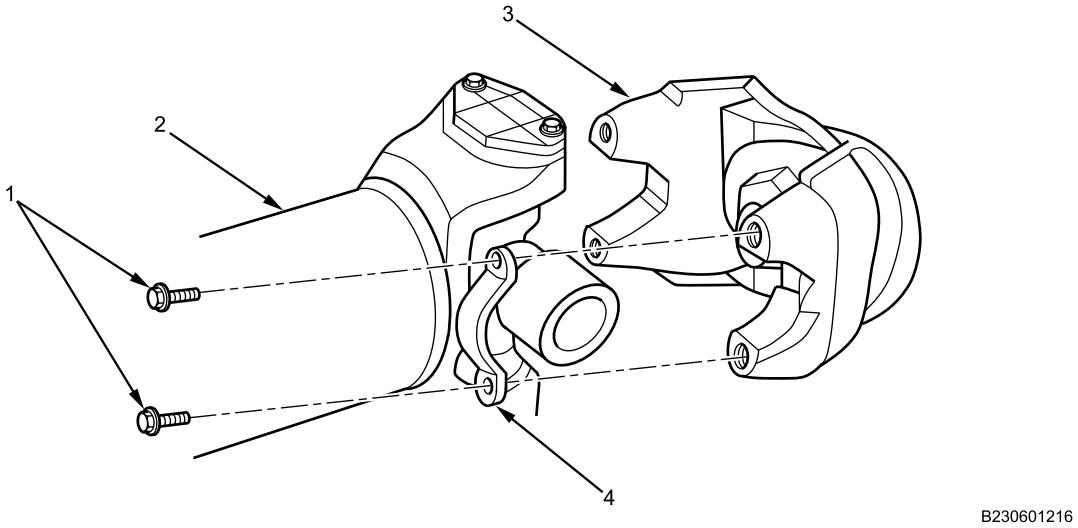

Figure 2. Prop Shaft.

2. Install four new bolts (Figure 2, Item 1) and bearing straps (Figure 2, Item 4) on forward or rear output yokes (Figure 2, Item 3) and torque to 115-135 lb-ft (156-183 N•m).
3. Repeat step 2 for opposite end of prop shaft (Figure 2, Item 2).

END OF TASK

FOLLOW-ON MAINTENANCE

1. Remove wheel chocks (TM 9-2355-106-10).
2. Turn MAIN POWER switch on (TM 9-2355-106-10).
3. Test-drive vehicle to verify prop shaft operation (TM 9-2355-106-10).
4. Shut engine off (TM 9-2355-106-10).
5. Turn MAIN POWER switch off (TM 9-2355-106-10).
6. Set parking brake (TM 9-2355-106-10).
7. Chock wheels (TM 9-2355-106-10).
8. Install belly armor (forward shafts only) (WP 0606).
9. Remove wheel chocks (TM 9-2355-106-10).

END OF TASK

END OF WORK PACKAGE

FIELD MAINTENANCE

TRANSMISSION TO TRANSFER CASE PROP SHAFT REMOVAL AND INSTALLATION

INITIAL SETUP:

Tools and Special Tools
General Mechanic's Tool Kit (GMTK) (WP 0795, Item 37)
Wrench, torque, 1/2-in drive, 50-250 ft-lb (WP 0795, Item 143)

Materials/Parts
Screw, cap - (4 per input prop shaft yoke) (WP 0796, Item 47)
Bolt - (4 per output prop shaft yoke) (WP 0796, Item 128)

References
TM 9-2355-106-10
TM 9-2355-106-23P
WP 0786
WP 0782

Equipment Condition
Parking brake set (TM 9-2355-106-10)
Transmission set in NEUTRAL (N) (TM 9-2355-106-10)
Engine off (TM 9-2355-106-10)
MAIN POWER switch off (TM 9-2355-106-10)
Wheels chocked (TM 9-2355-106-10)
Belly armor removed (WP 0606)

REMOVAL

NOTE

Note which end of propshaft is attached to transfer case to aid installation.

1. Remove four cap screws (Figure 1, Item 1) and two retainer straps (Figure 1, Item 3) from transfer case end of propshaft (Figure 1, Item 2). Discard cap screws (Figure 1, Item 1) and bearing retainer straps (Figure 1, Item 3).

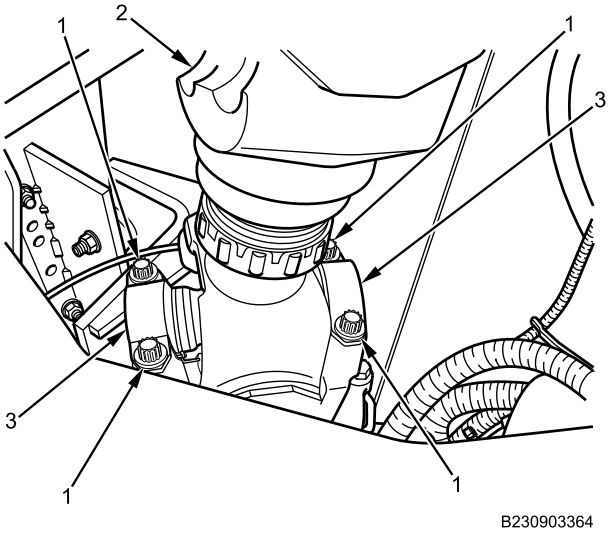

Figure 1. Transfer Case End of Propshaft Straps and Bolts.

TRANSMISSION TO TRANSFER CASE PROP SHAFT REMOVAL AND INSTALLATION - (CONTINUED)

2. Remove four cap screws (Figure 2, Item 2) and two retainer straps (Figure 2, Item 1) from transmission end of propshaft (Figure 2, Item 3). Discard cap screws (Figure 2, Item 2). Two cap screws not shown.

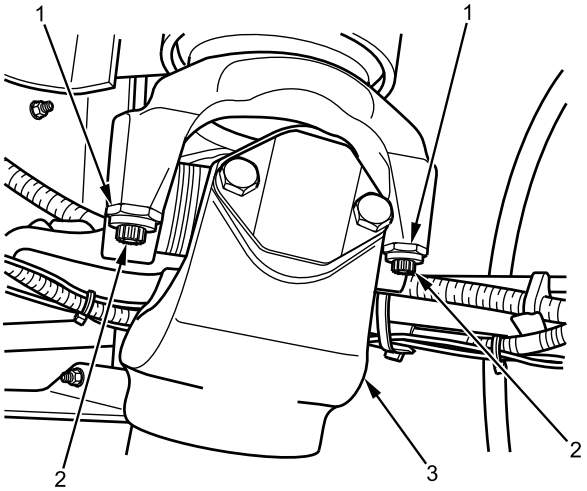

Figure 2. Transmission End of Propshaft Straps and Bolts.

3. Pry ends of propshaft (Figure 2, Item 3) from transfer case and transmission, and remove propshaft from vehicle.

END OF TASK

INSTALLATION

1. Position propshaft (Figure 3, Item 3) in between yokes of transmission and transfer case, and spread propshaft out until bearing cups are seated in yokes.

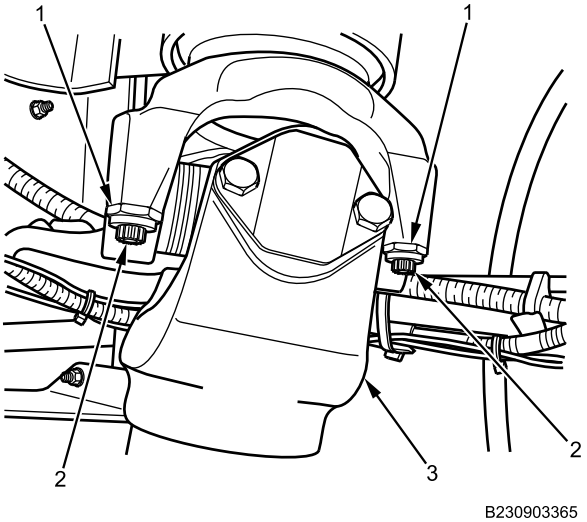

Figure 3. Transmission End of Propshaft Straps and Bolts.

2. Install bearing retainer straps (Figure 3, Item 1) and four new cap screws (Figure 3, Item 2) on transmission end of propshaft (Figure 3, Item 3) and torque cap screws to 115-135 lb ft (156-183 N•m). Two cap screws not shown.
3. Install bearing retainer straps (Figure 4, Item 3) and four new cap screws (Figure 4, Item 1) on transfer case end of propshaft (Figure 4, Item 2) and torque cap screws to 115-135 lb ft (156-183 N•m).

TRANSMISSION TO TRANSFER CASE PROP SHAFT REMOVAL AND INSTALLATION - (CONTINUED)

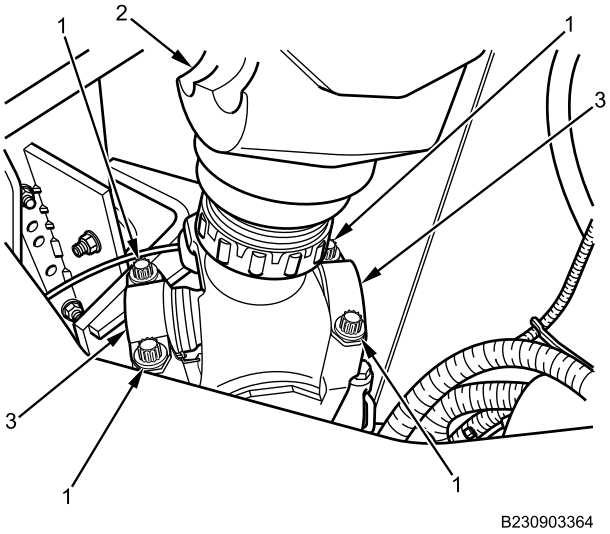

Figure 4. Transfer Case End of Propshaft Straps and Bolts.

END OF TASK

FOLLOW-ON MAINTENANCE

1. Remove wheel chocks (TM 9-2355-106-10).
2. Turn MAIN POWER switch on (TM 9-2355-106-10).
3. Test-drive vehicle to verify prop shaft operation (TM 9-2355-106-10).
4. Shut engine off (TM 9-2355-106-10).
5. Turn MAIN POWER switch off (TM 9-2355-106-10).
6. Set parking brake (TM 9-2355-106-10).
7. Chock wheels (TM 9-2355-106-10).
8. Install belly armor (WP 0606).
9. Remove wheel chocks (TM 9-2355-106-10).

END OF TASK

END OF WORK PACKAGE

FIELD MAINTENANCE

FRONT AXLE ASSEMBLY REMOVAL AND INSTALLATION

INITIAL SETUP:

Tools and Special Tools
General Mechanic's Tool Kit (GMTK) (WP 0795, Item 37)
Wrench, torque, click, ratcheting, 15-75 lb-ft, 3/8-inch drive (WP 0795, Item 145)
Torque wrench, 3/4-inch drive, (90-600-lb-ft) (WP 0795, Item 144)
Jack, floor, 20-ton (WP 0795, Item 59)
Jackstand, 10-ton, 19-28.5-inches (WP 0795, Item 62)
Jackstand, 10-ton, 30-52 inches (2) (WP 0795, Item 63)
Block, filler, wood (WP 0795, Item 20)
Multiplier, torque (WP 0795, Item 74)
Adapter, socket, wrench drive, 3/4-inch male - 1/2-inch female (WP 0795, Item 5)
Adapter, socket wrench, 3/8-inch drive female - 1/2-inch male (WP 0795, Item 2)
Socket, std., impact, 3/4-drive, 6 pt, 1-1/4-inch (WP 0795, Item 111)
Socket, std., impact, 3/4-drive, 6 pt, 1-5/16-inch (WP 0795, Item 112)
Socket, deep well, 3/4-inch drive, 6 pt, 1-1/4 inch (WP 0795, Item 99)

Materials/Parts
Compound (WP 0794, Item 13)
Goggles, industrial (WP 0794, Item 20)
Faceshield, industrial (WP 0794, Item 16)
Gloves (WP 0794, Item 18)
Locknut - (8) (WP 0796, Item 44)
Cable lock strap - (7) (WP 0796, Item 124)

Personnel Required
Maintainer - (3)

References
TM 9-2355-106-10
TM 9-2355-106-23P
WP 0786
WP 0782

Equipment Condition
Parking brake set (TM 9-2355-106-10)
Transmission set in NEUTRAL (N) (TM 9-2355-106-10)
Engine off (TM 9-2355-106-10)
MAIN POWER switch off (TM 9-2355-106-10)
Wheels chocked (TM 9-2355-106-10)
Air tanks and reservoirs drained (TM 9-2355-106-10)
Belly armor removed (WP 0606)
Front prop shaft removed (WP 0468)
Steering drag link removed (WP 0536)

FRONT AXLE ASSEMBLY REMOVAL AND INSTALLATION - (CONTINUED)

WARNING

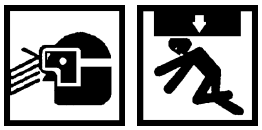

To prevent serious eye injury, always wear eye protection when performing vehicle maintenance or service.

Before lifting vehicle off ground, make sure it is parked on level surface. Set parking brake and chock wheels. Use hydraulic jack to lift vehicle. Jackstands and hydraulic jack must be used on a stable surface capable of supporting the combined weight of the vehicle being lifted and the lifting equipment. Do not use jack alone to support vehicle. Never work under or near a vehicle supported only by jack or lifting device. Use rated jackstands under frame rails to properly support vehicle. Do not support vehicle under front and rear axles. Use additional jackstands as necessary to support vehicle components during removal and installation procedures. Failure to comply may result in damage to equipment and serious injury or death to personnel.

Do not operate vehicle with air pressure system loss. Vehicle has reduced or no braking capability and may not stop. Failure to comply may result in damage to equipment and serious injury or death to personnel.

Let air pressure build in both tanks to 100 psi (689 kPa) before releasing the parking brake. Low air pressure may affect vehicle braking capability. Failure to comply may result in injury or death to personnel.

FRONT AXLE ASSEMBLY REMOVAL AND INSTALLATION - (CONTINUED)

REMOVAL

1. Using 20-ton floor jack (Figure 1, Item 3), raise front axle (Figure 1, Item 4) so that bottom of front bumper (Figure 1, Item 1) is 49 inches (124.5 cm) off ground.

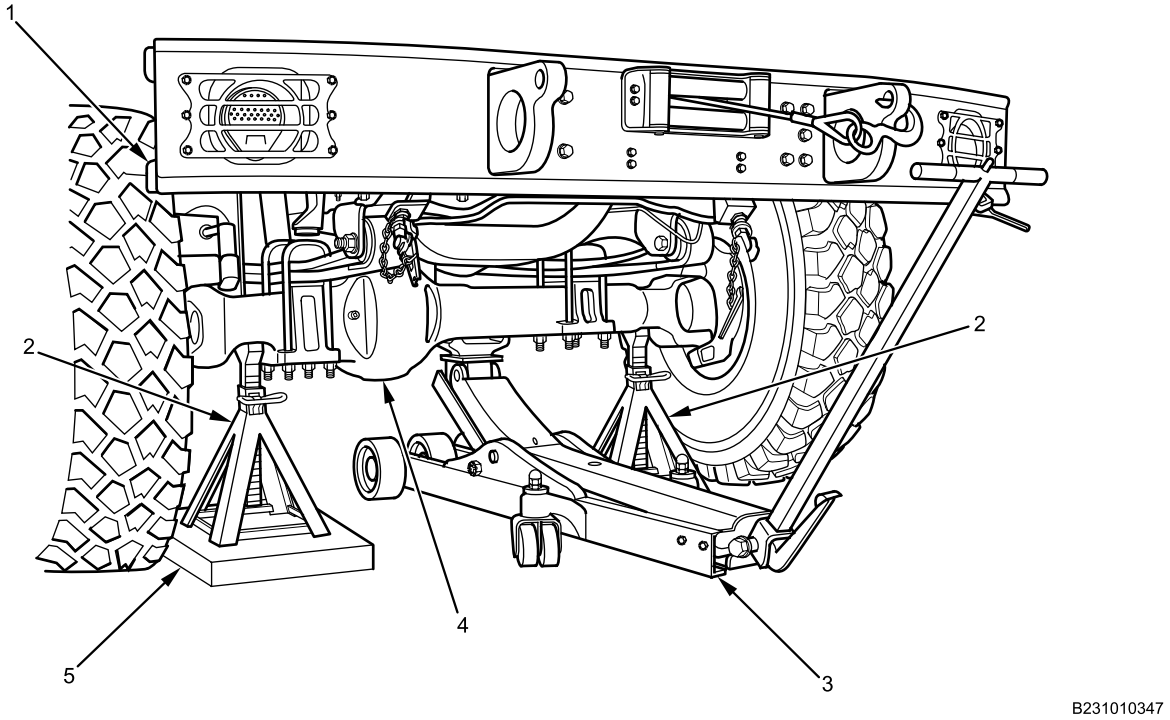

Figure 1. Raising Front Axle.

2. Position 10-ton jackstands (Figure 1, Item 2) on filler blocks (Figure 1, Item 5) under front axle (Figure 1, Item 4) for safety.

FRONT AXLE ASSEMBLY REMOVAL AND INSTALLATION - (CONTINUED)

3. Position highboy jackstand (Figure 2, Item 1) under right side frame rail (Figure 2, Item 2), behind front axle springs, with wire harnesses (Figure 2, Item 3) positioned aside.

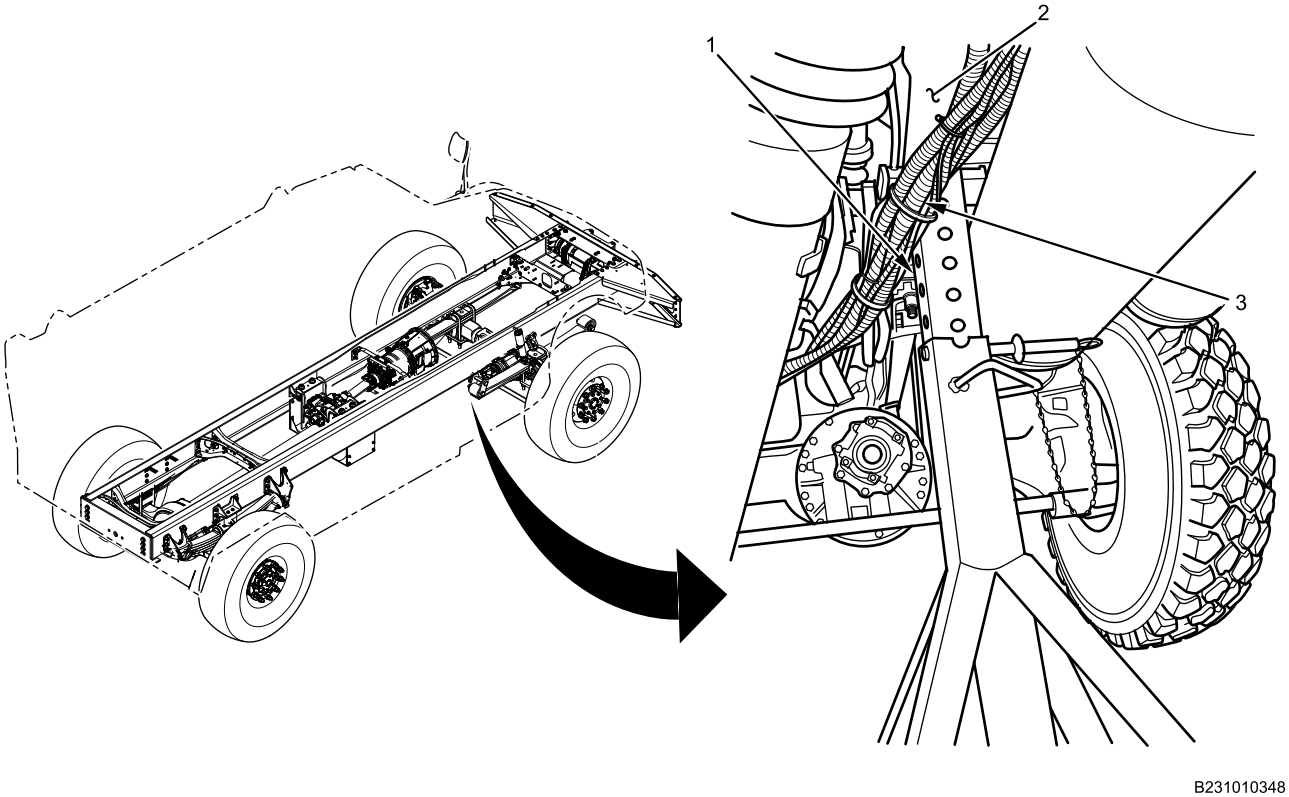

Figure 2. Highboy Jackstand Right Side.

4. Position highboy jackstand (Figure 3, Item 3) under left side frame rail (Figure 3, Item 1), behind front axle springs, with wire harnesses (Figure 3, Item 2) positioned aside.

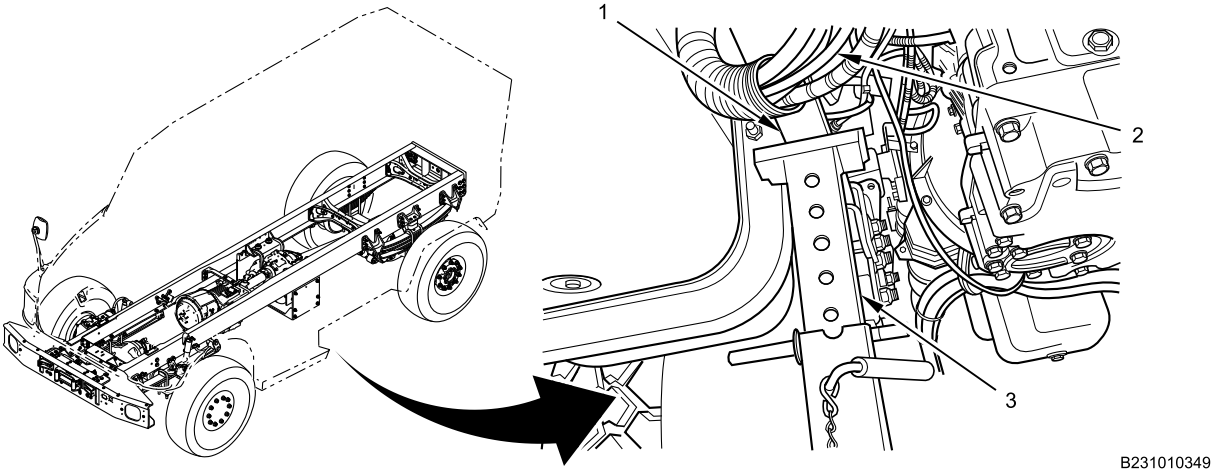

Figure 3. Highboy Jackstand Left Side.

5. Release clamp (Figure 4, Item 2) and remove vent hose (Figure 4, Item 3) from breather fitting (Figure 4, Item 1).

FRONT AXLE ASSEMBLY REMOVAL AND INSTALLATION - (CONTINUED)

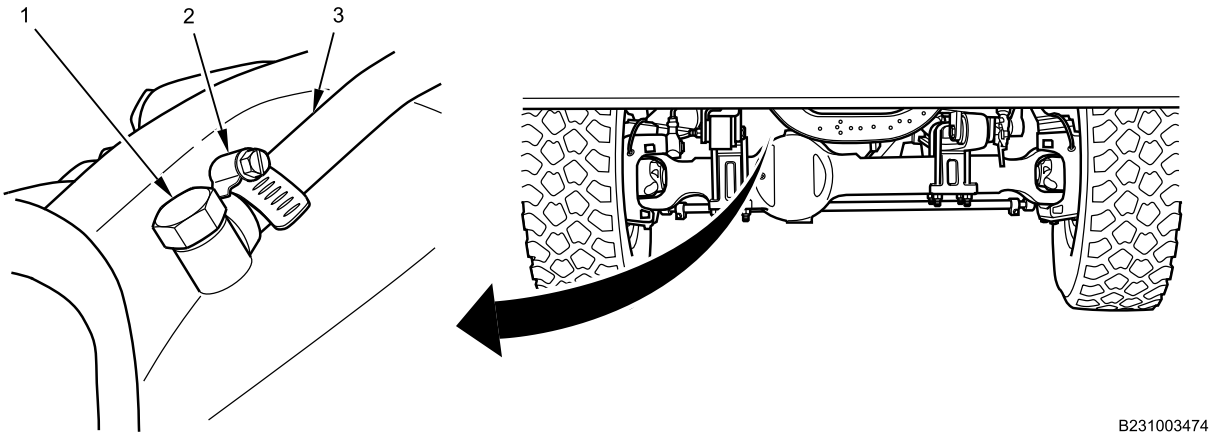

Figure 4. Vent Tube Disconnection.

NOTE

Perform steps 6-8 on left side of vehicle.

6. Remove nut (Figure 5, Item 5), outer washer (Figure 5, Item 4), bolt (Figure 5, Item 2), inner washer (Figure 5, Item 6), and front shock absorber (Figure 5, Item 3) from U-bolt seat (Figure 5, Item 1).

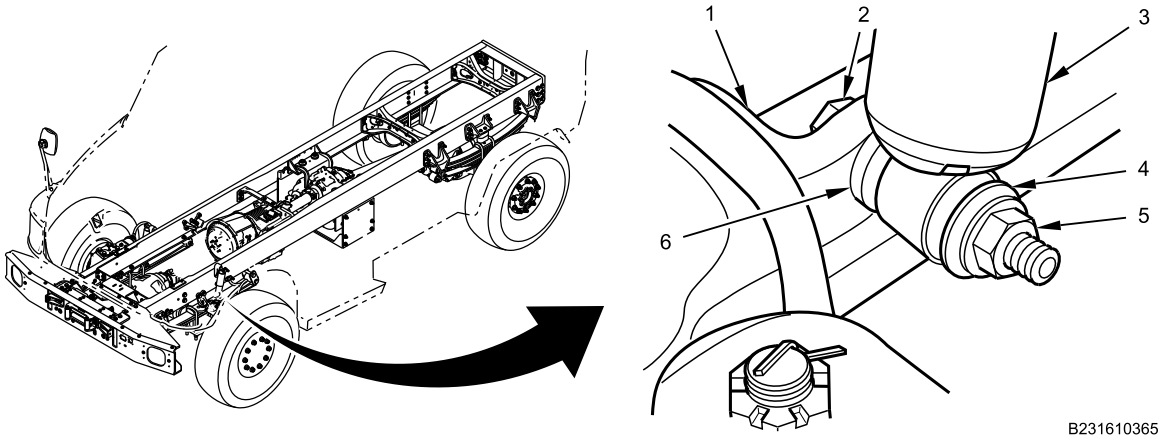

Figure 5. Left Front Shock Absorber Lower Mount.

FRONT AXLE ASSEMBLY REMOVAL AND INSTALLATION - (CONTINUED)

7. Disconnect air hose (Figure 6, Item 2) from modulator valve (Figure 6, Item 1).

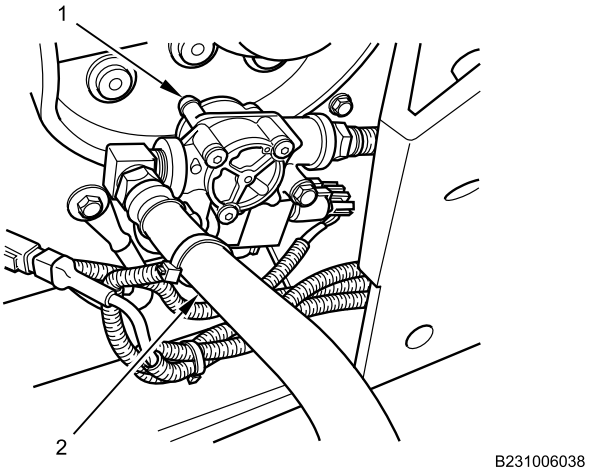

Figure 6. Left Air Brake Chamber Disconnected.

8. Disconnect ABS sensor electrical connector (Figure 7, Item 2), remove cable lock straps (Figure 7, Item 1) as necessary, and position connector aside. Discard cable lock straps.

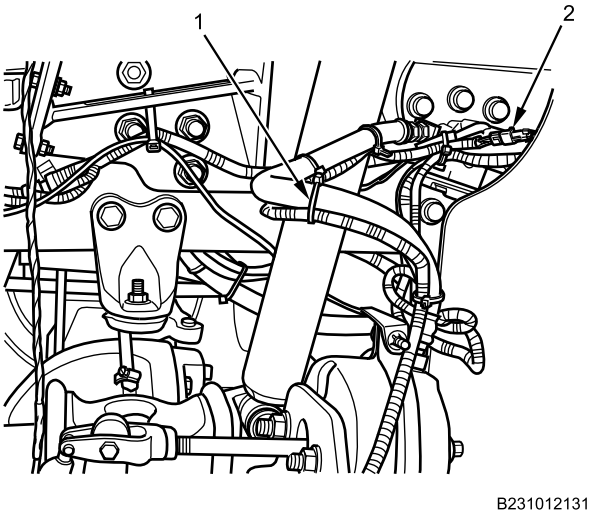

Figure 7. Left Antilock Brake System (ABS) Sensor Disconnected.

FRONT AXLE ASSEMBLY REMOVAL AND INSTALLATION - (CONTINUED)

NOTE

Perform steps 9-11 on right side of vehicle.

9. Remove nut (Figure 8, Item 5), outer washer (Figure 8, Item 6), bolt (Figure 8, Item 2), inner washer (Figure 8, Item 3), and front shock absorber (Figure 8, Item 1) from U-bolt seat (Figure 8, Item 4).

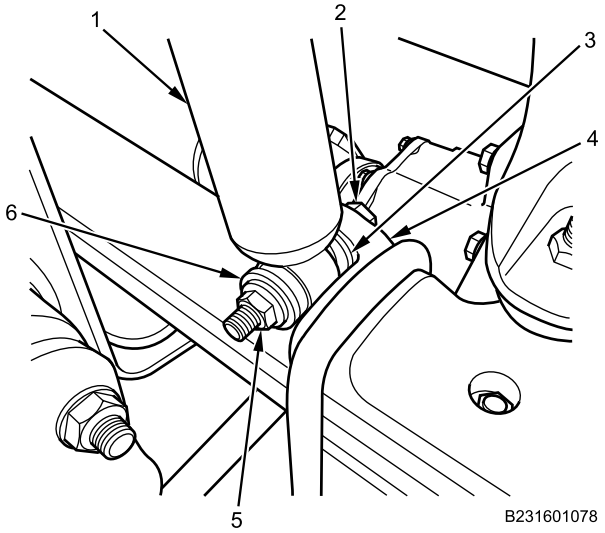

Figure 8. Right Front Shock Absorber Lower Mount.

10. Disconnect air hose (Figure 9, Item 2) from modulator valve (Figure 9, Item 1).

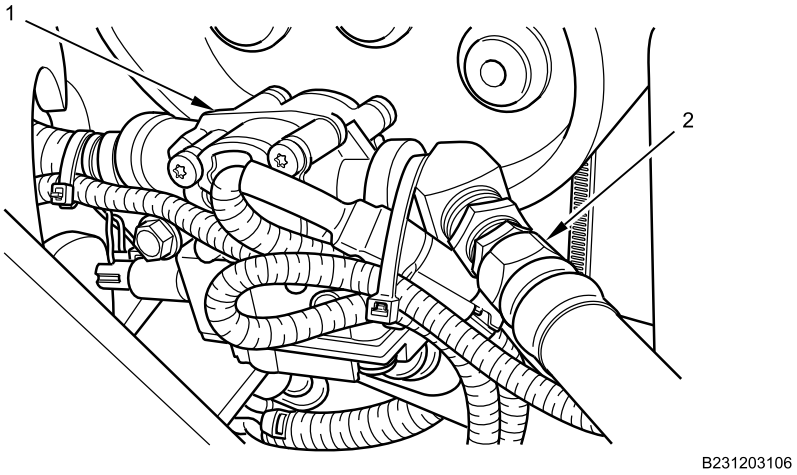

Figure 9. Right Air Brake Chamber Disconnected.

FRONT AXLE ASSEMBLY REMOVAL AND INSTALLATION - (CONTINUED)

11. Disconnect ABS sensor electrical connector (Figure 10, Item 1), remove cable lock straps (Figure 10, Item 2) as necessary, and position connector aside. Discard cable lock straps.

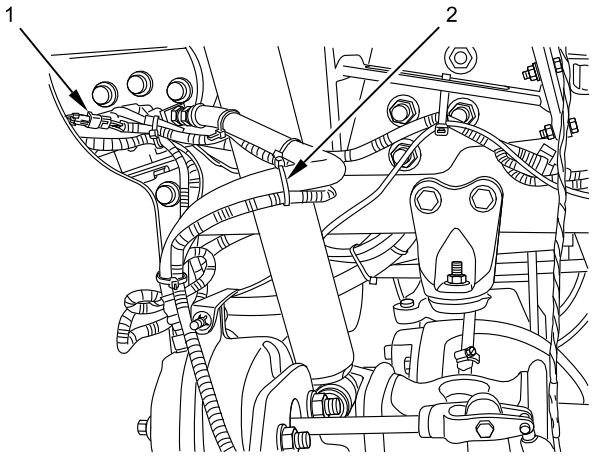

Figure 10. Right Antilock Brake System (ABS) Sensor Disconnected.

NOTE

Keep pressure on floor jack while removing U-bolts from axle.

12. Remove eight U-bolt locknuts (Figure 11, Item 4) and eight flat washers (Figure 11, Item 3) from U-bolts (Figure 11, Item 1). Discard locknuts.

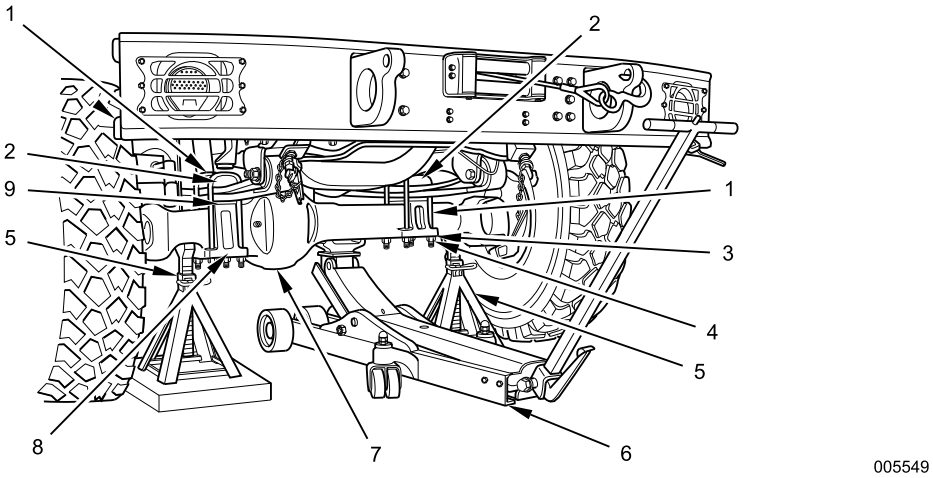

Figure 11. Front U-Bolt Plates and Axle Assembly Removal.

13. Remove four U-bolts (Figure 11, Item 1) and two upper U-bolt plates (Figure 11, Item 2) from two axle-mounted brackets (Figure 11, Item 8) on front axle assembly (Figure 11, Item 7).
14. Raise front axle slightly with 20-ton floor jack (Figure 11, Item 6), and remove 10-ton jackstands (Figure 11, Item 5) from front axle.
15. With maintainer assistance, lower front axle and wheel assembly (Figure 11, Item 7) away from springs with 20-ton floor jack (Figure 11, Item 6) until wheels are supported by floor. Remove floor jack.
16. Remove lower U-bolt plate (Figure 11, Item 9) from front axle assembly (Figure 11, Item 7).

FRONT AXLE ASSEMBLY REMOVAL AND INSTALLATION - (CONTINUED)

NOTE

Vehicle height may need to be adjusted to clear front bumper.

17. Roll axle (Figure 11, Item 7) out from under vehicle.

END OF TASK

DISASSEMBLY

1. With assistance of two maintainers, position front axle assembly (Figure 12, Item 3) on two 10-ton jackstands (Figure 12, Item 1) using 20-ton floor jack (Figure 12, Item 2). Prepare for wheel assembly removal. Refer to Wheel and Tire Assembly Removal and Installation (WP 0530).

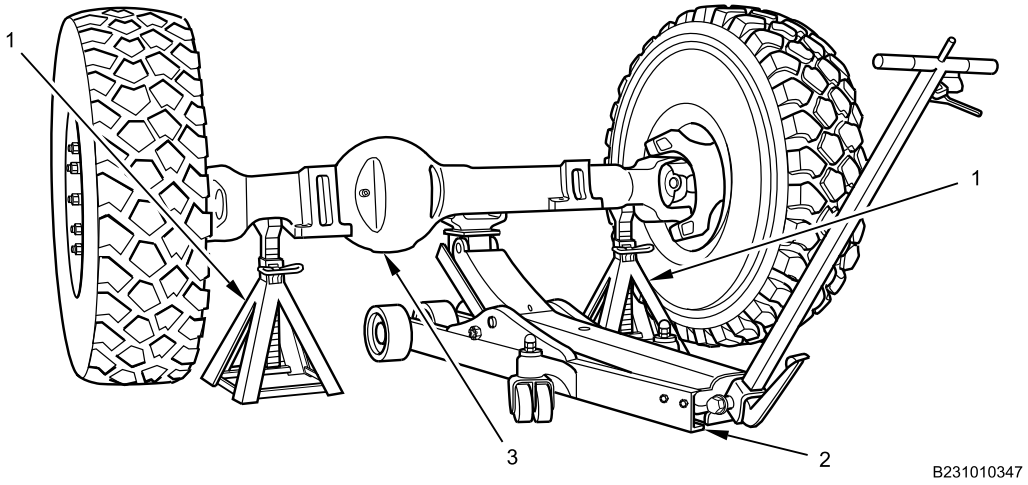

Figure 12. Preparation for Wheel and Tire Removal.

END OF TASK

FRONT AXLE ASSEMBLY REMOVAL AND INSTALLATION - (CONTINUED)

ASSEMBLY

1. With assistance of two maintainers, secure axle assembly (Figure 13, Item 3) on 10-ton jackstands (Figure 13, Item 1) with 20-ton floor jack (Figure 13, Item 2). Prepare for wheel assembly installation. Refer to Wheel and Tire Assembly Removal and Installation (WP 0530).

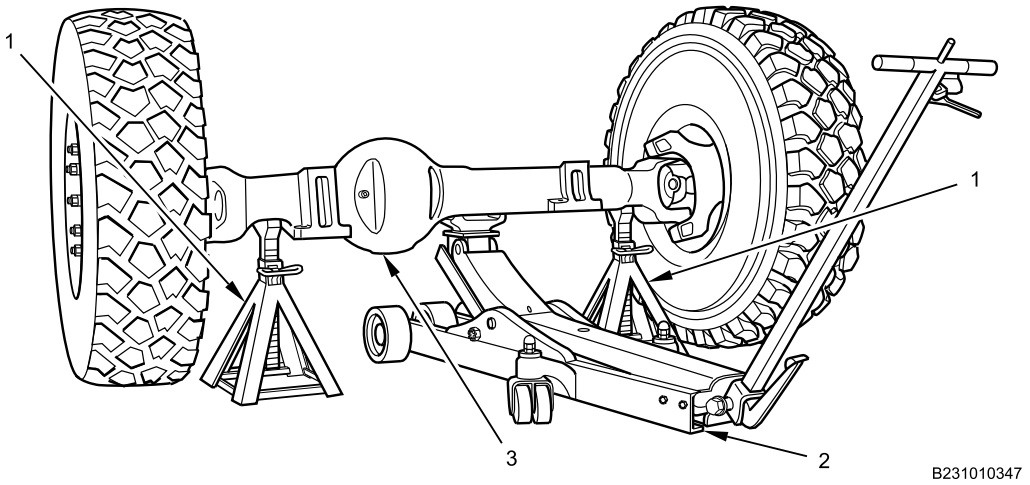

Figure 13. Preparation for Wheel and Tire Installation.

END OF TASK

FRONT AXLE ASSEMBLY REMOVAL AND INSTALLATION - (CONTINUED)

INSTALLATION

1. With assistance of two maintainers, roll front axle assembly (Figure 14, Item 4) directly under springs.

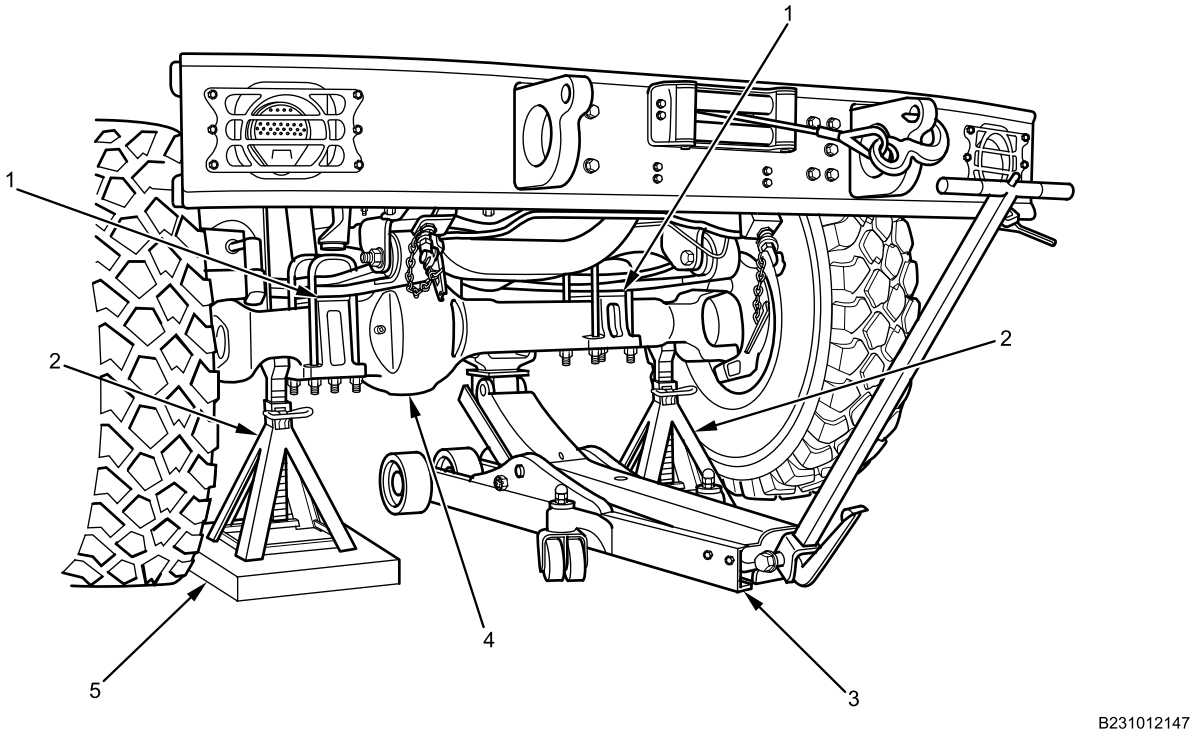

Figure 14. Front Axle Assembly Installation.

2. Install lower U-bolt plates (Figure 14, Item 1) on left and right side of front axle assembly (Figure 14, Item 4).

NOTE

Align front axle assembly with guide pins on springs.

3. Raise front axle assembly (Figure 14, Item 4) into position with 20-ton floor jack (Figure 14, Item 3).
4. Position 10-ton jackstands (Figure 14, Item 2) on filler blocks (Figure 14, Item 5) under front axle (Figure 14, Item 4) for safety.

FRONT AXLE ASSEMBLY REMOVAL AND INSTALLATION - (CONTINUED)

NOTE

Left side shown; right side similar.

5. Install U-bolts (Figure 15, Item 2) and upper U-bolt plates (Figure 15, Item 1) over front springs and through lower boltholes of two axle-mounted brackets (Figure 15, Item 5).

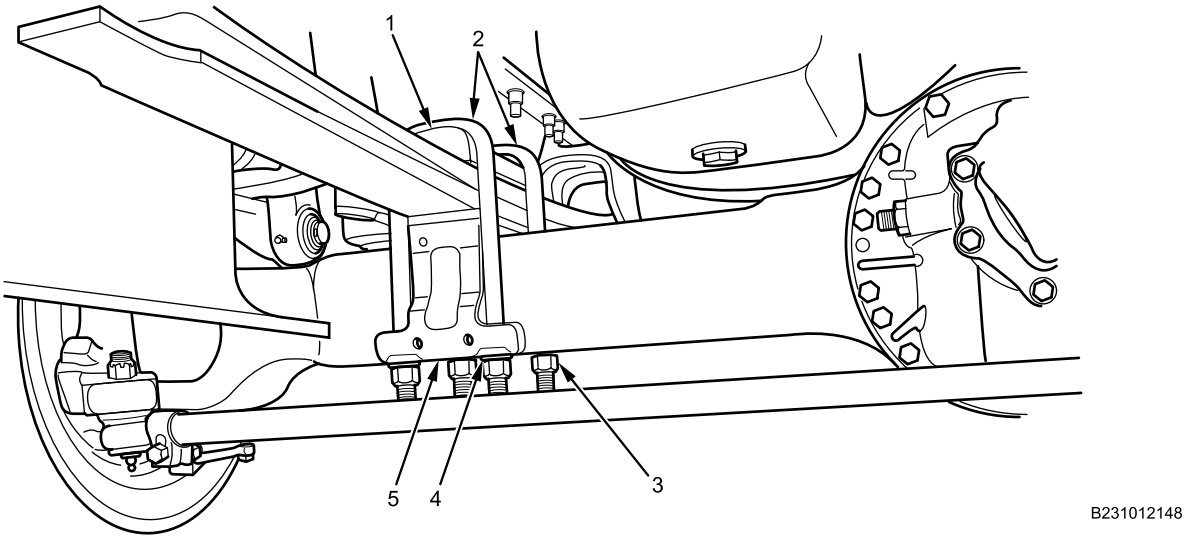

Figure 15. Front Axle Assembly Installation.

6. Install four flat washers (Figure 15, Item 4) and four new locknuts (Figure 15, Item 3). Do not tighten locknuts at this time.

CAUTION

During installation of U-bolts and U-bolt plates, front springs are under gradually increasing tension as they are compressed above the axle. Following installation of U-bolt plates, front springs may expand unexpectedly when jackstands are removed and vehicle is lowered to ground. Use diagonal patterns when tightening locknuts or bolts. Failure to comply may result in damage to equipment.

7. Using diagonal pattern shown in Figure 16, torque U-bolt plate locknuts as follows:
   a. Torque four left side locknuts to 15 lb-ft (20 N•m).
   b. Torque four left side locknuts to 100 lb-ft (136 N•m).
   c. Torque four left side locknuts to 200 lb-ft (270 N•m).
   d. Torque four left side locknuts to 300 lb-ft (407 N•m).
   e. Torque four left side locknuts to 370-400 lb-ft (502-542 N•m).

FRONT AXLE ASSEMBLY REMOVAL AND INSTALLATION - (CONTINUED)

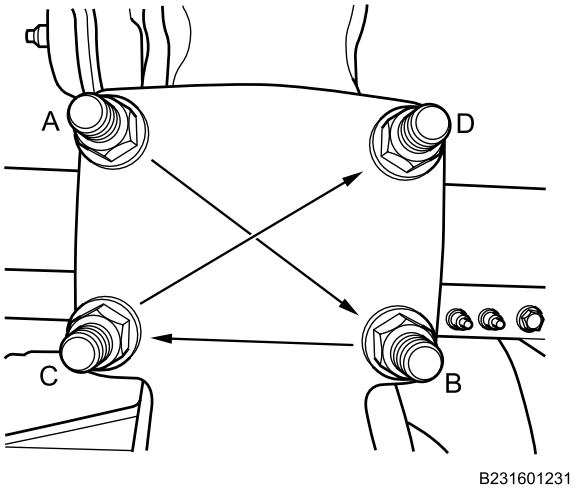

Figure 16. U-Bolt Plate Locknuts Torque Sequence.

8. Repeat steps 5-7 for right side.

NOTE

Perform steps 9-13 on right side of vehicle.

9. Connect ABS sensor electrical connector (Figure 17, Item 1) and install new cable lock straps (Figure 17, Item 2) as necessary.

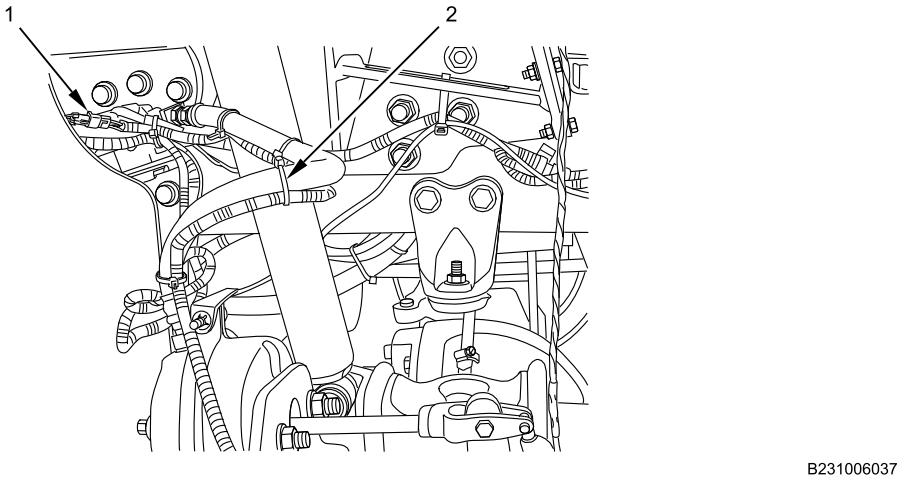

Figure 17. Right ABS Sensor Connected.

FRONT AXLE ASSEMBLY REMOVAL AND INSTALLATION - (CONTINUED)

10. Connect air hose (Figure 18, Item 2) to modulator valve (Figure 18, Item 1).

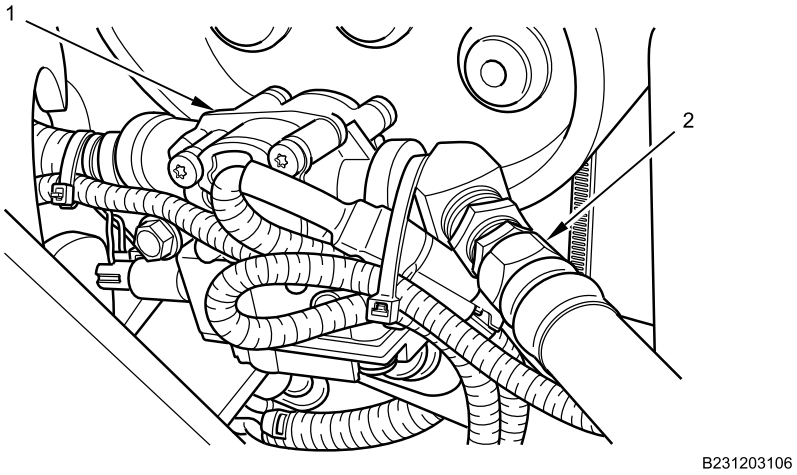

Figure 18. Right Air Brake Chamber Connected.

WARNING

Corrosion preventive compound is toxic. Use only in well-ventilated area. Do not get in eyes; wear chemical safety goggles and full-face shield when using. Avoid contact with skin and wear rubber or plastic, solvent-resistant gloves. In case of contact, remove contaminated clothing and immediately wash area with soap and water. If compound contacts eyes, flush eyes with large amounts of water for at least 15 minutes and get immediate medical attention. If swallowed, do not induce vomiting; contact a physician immediately. Failure to comply may result in serious injury or death to personnel.

11. Apply corrosion preventive compound to lower bolt (Figure 19, Item 2), inner washer (Figure 19, Item 3), outer washer (Figure 19, Item 6), and lower nut (Figure 19, Item 5).

FRONT AXLE ASSEMBLY REMOVAL AND INSTALLATION - (CONTINUED)

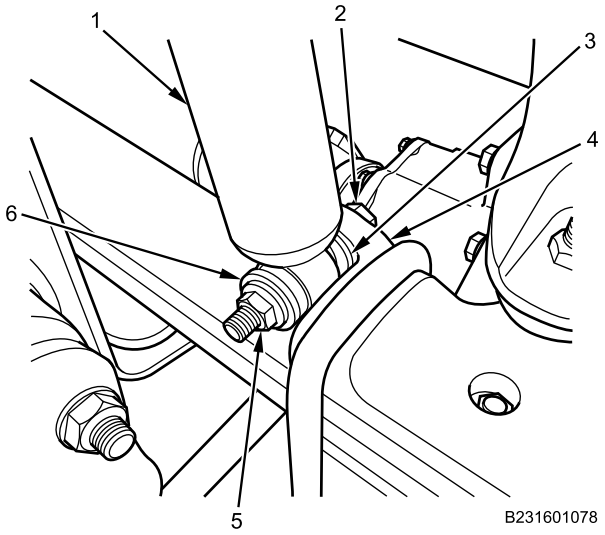

Figure 19. Right Front Shock Absorber on Lower Mount.

12. Install front shock absorber (Figure 19, Item 1) on lower mount (Figure 19, Item 4) with bolt (Figure 19, Item 2), inner washer (Figure 19, Item 3), outer washer (Figure 19, Item 6), and nut (Figure 19, Item 5).
13. Torque nut (Figure 19, Item 5) to 135-165 lb-ft (183-224 N•m).

NOTE

Perform steps 14-18 on left side of vehicle.

14. Connect ABS sensor electrical connector (Figure 20, Item 1) and install new cable lock straps (Figure 20, Item 2) as necessary.

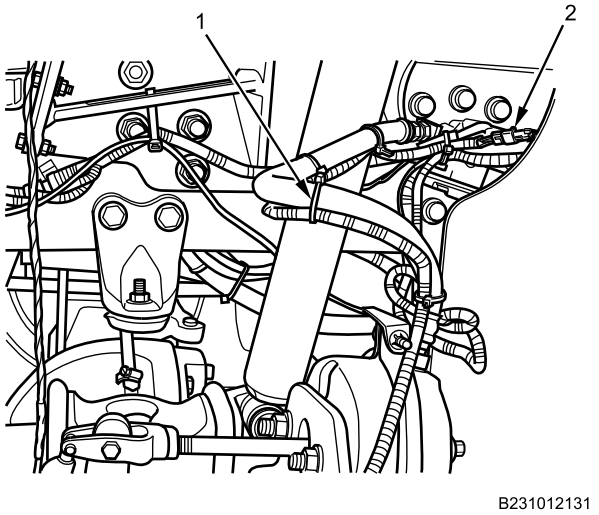

Figure 20. Left ABS Sensor Connected.

FRONT AXLE ASSEMBLY REMOVAL AND INSTALLATION - (CONTINUED)

15. Connect air hose (Figure 21, Item 2) to modulator valve (Figure 21, Item 1).

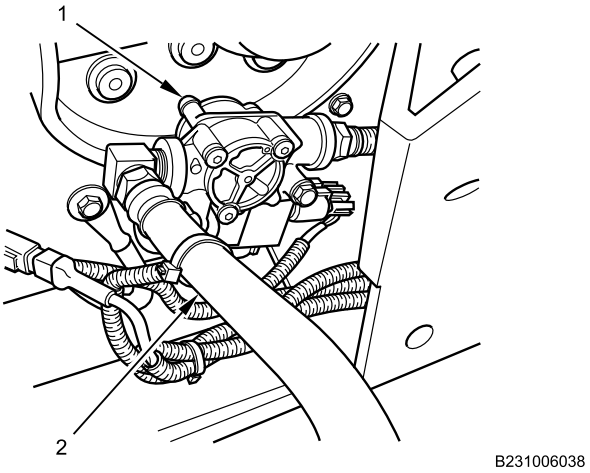

Figure 21. Left Air Brake Chamber Connected.

WARNING

Corrosion preventive compound is toxic. Use only in well-ventilated area. Do not get in eyes; wear chemical safety goggles and full-face shield when using. Avoid contact with skin and wear rubber or plastic, solvent-resistant gloves. In case of contact, remove contaminated clothing and immediately wash area with soap and water. If compound contacts eyes, flush eyes with large amounts of water for at least 15 minutes and get immediate medical attention. If swallowed, do not induce vomiting; contact a physician immediately. Failure to comply may result in serious injury or death to personnel.

16. Apply corrosion preventive compound to lower bolt (Figure 22, Item 2), inner washer (Figure 22, Item 6), outer washer (Figure 22, Item 4), and lower nut (Figure 22, Item 5).

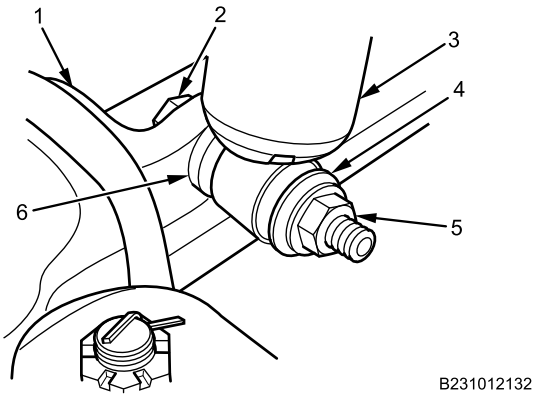

Figure 22. Left Front Shock Absorber on Lower Mount.

17. Install front shock absorber (Figure 22, Item 3) on U-bolt seat (Figure 22, Item 1) with bolt (Figure 22, Item 2), inner washer (Figure 22, Item 6), outer washer (Figure 22, Item 4), and nut (Figure 22, Item 5).

FRONT AXLE ASSEMBLY REMOVAL AND INSTALLATION - (CONTINUED)

18. Torque nut (Figure 22, Item 5) to 135-165 lb-ft (183-224 N•m).

END OF TASK

FOLLOW-ON MAINTENANCE

1. Install steering drag link (WP 0536).
2. Install front prop shaft (WP 0468).
3. Check axle fluid level (TM 9-2355-106-10).
4. Perform front-end alignment (WP 0472).
5. Turn MAIN POWER switch on (TM 9-2355-106-10).
6. Start engine and allow air pressure to build to normal operating levels (TM 9-2355-106-10).
7. Turn wheel to full lock in both directions until axle stops are contacted, to set auto plunger to correct position.
8. Check for air and fluid leaks (TM 9-2355-106-10).
9. Remove wheel chocks (TM 9-2355-106-10).
10. Test-drive to verify proper vehicle operation (TM 9-2355-106-10).
11. Set vehicle parking brake (TM 9-2355-106-10).
12. Set transmission in NEUTRAL (N) (TM 9-2355-106-10).
13. Turn engine off (TM 9-2355-106-10).
14. Turn MAIN POWER switch off (TM 9-2355-106-10).
15. Chock wheels (TM 9-2355-106-10).
16. Recheck for air and fluid leaks (TM 9-2355-106-10).
17. Recheck hub lubricant fluid level after vehicle cool-down (TM 9-2355-106-10).
18. Install belly armor (WP 0606).
19. Remove wheel chocks (TM 9-2355-106-10).

END OF TASK

END OF WORK PACKAGE

FIELD MAINTENANCE

FRONT WHEEL HUB AND BEARING REMOVAL AND INSTALLATION

INITIAL SETUP:

Tools and Special Tools
General Mechanic's Tool Kit (GMTK) (WP 0795, Item 37)
Dial indicator set (WP 0795, Item 27)
Hammer, hand, soft face, dead blow, 52 oz (WP 0795, Item 45)
Puller set, mechanical (WP 0795, Item 78)
Pliers, Snapring Tool Kit (WP 0795, Item 92)
Wrench, torque, 90-600 lb-ft, 3/4-inch drive (WP 0795, Item 144)
Wrench, torque, 20-100 lb-ft, 3/8-inch drive (WP 0795, Item 141)
Socket, bearing locknut, 8pt, 4-7/8-inch (WP 0795, Item 97)
Punch, 3/8-inch, 3/16-inch (WP 0795, Item 81)

Materials/Parts
Seal (WP 0796, Item 49)
Goggles, industrial (WP 0794, Item 20)
Grease (WP 0794, Item 21)
Adhesive (WP 0794, Item 3)
Rags (WP 0794, Item 39)
Brake cleaner (WP 0794, Item 9)

Personnel Required
Maintainer - (2)

References
TM 9-2355-106-10
TM 9-2355-106-23P
WP 0786
WP 0782

Equipment Condition
Parking brake set (TM 9-2355-106-10)
Transmission set in NEUTRAL (N) (TM 9-2355-106-10)
Engine off (TM 9-2355-106-10)
MAIN POWER switch off (TM 9-2355-106-10)
Wheels chocked (TM 9-2355-106-10)
Front brake drum removed (WP 0487)

REMOVAL

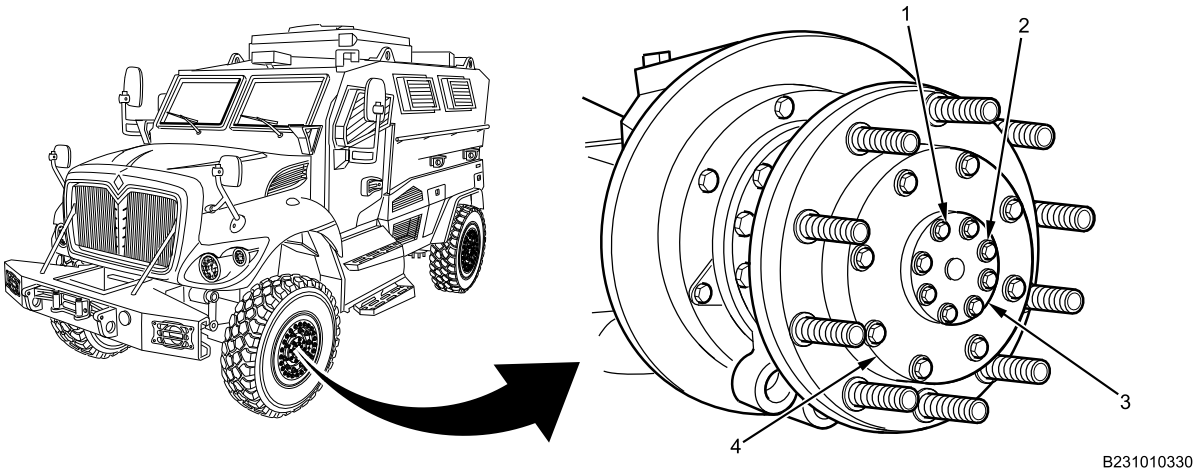

Figure 1. Hubcap Removal. Brake Shoes and Hardware Removed for Clarity.

NOTE

Left side shown, right side similar.

1. Remove eight bolts (Figure 1, Item 1) and washers (Figure 1, Item 2) from hubcap (Figure 1, Item 3).
2. Remove hubcap (Figure 1, Item 3) from drive flange (Figure 1, Item 4).

FRONT WHEEL HUB AND BEARING REMOVAL AND INSTALLATION - (CONTINUED)

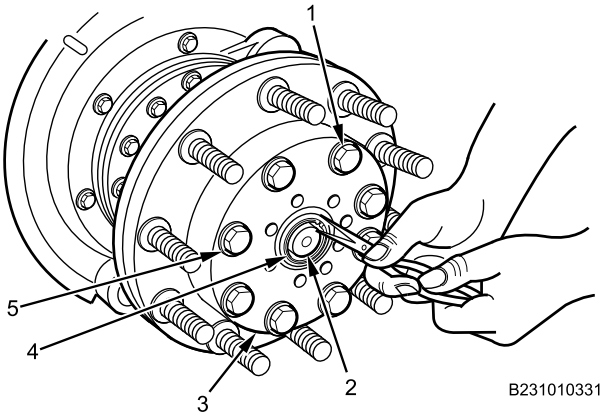

Figure 2. Snapring Removal.

3. Remove snapring (Figure 2, Item 4) from axle shaft end (Figure 2, Item 2). Discard snapring (Figure 2, Item 4).
4. Remove eight bolts (Figure 2, Item 1) and washers (Figure 2, Item 5) from drive flange (Figure 2, Item 3).

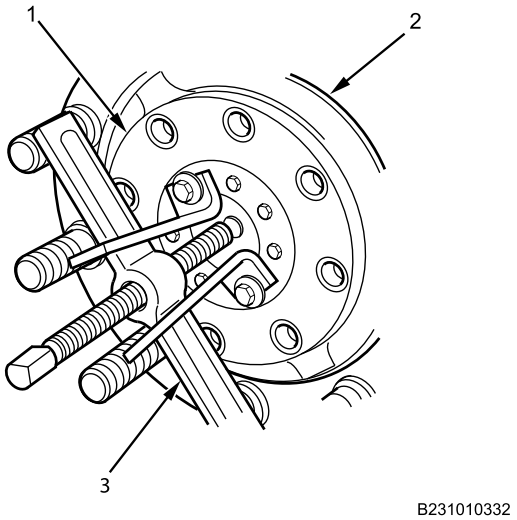

Figure 3. Drive Flange Removal.

5. Remove drive flange (Figure 3, Item 1) from hub (Figure 3, Item 2) using puller (Figure 3, Item 3).

FRONT WHEEL HUB AND BEARING REMOVAL AND INSTALLATION - (CONTINUED)

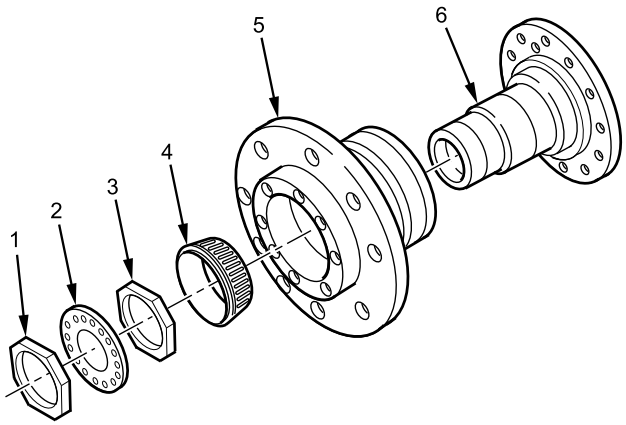

Figure 4. Hub and Spindle

6. Remove outer adjusting nut (Figure 4, Item 1), lockwasher (Figure 4, Item 2), inner adjusting nut (Figure 4, Item 3), and outer bearing cone (Figure 4, Item 4) from spindle (Figure 4, Item 6).

NOTE

A dead-blow hammer may be required to remove hub.

7. With assistant, remove front hub assembly (Figure 4, Item 5) by pulling straight off spindle (Figure 4, Item 6).

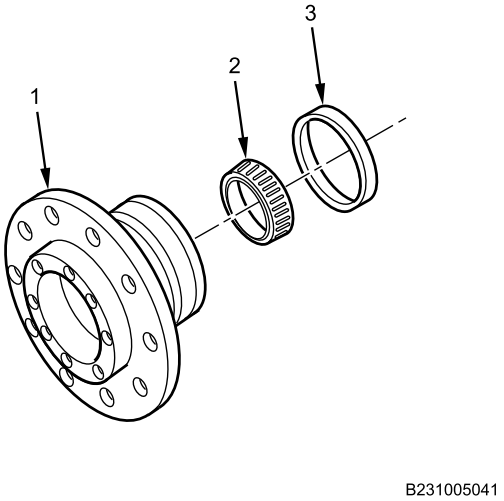

Figure 5. Hub, Bearing, and Seal.

8. Remove seal (Figure 5, Item 3) and inner bearing cone (Figure 5, Item 2) from hub (Figure 5, Item 1). Discard seal (Figure 5, Item 3).

END OF TASK

FRONT WHEEL HUB AND BEARING REMOVAL AND INSTALLATION - (CONTINUED)

CLEANING

WARNING

Adhesives, solvents, and sealing compounds can burn easily, can give off harmful vapors, and are harmful to skin and clothing. Wear goggles and protective clothing. Keep away from open flame and use in well-ventilated area. If adhesive, solvent, or sealing compound get on skin or clothing, wash immediately with soap and water. Failure to comply may result in injury or death to personnel.

1. Using rags and brake cleaner, clean all dirt off spindle, bearing cups, hub, inner and outer bearings, adjusting nuts, and lockwasher.
2. Dry all parts with rags.

END OF TASK

INSPECTION

1. Inspect bearing cones and bearing cups for excessive wear or damage.

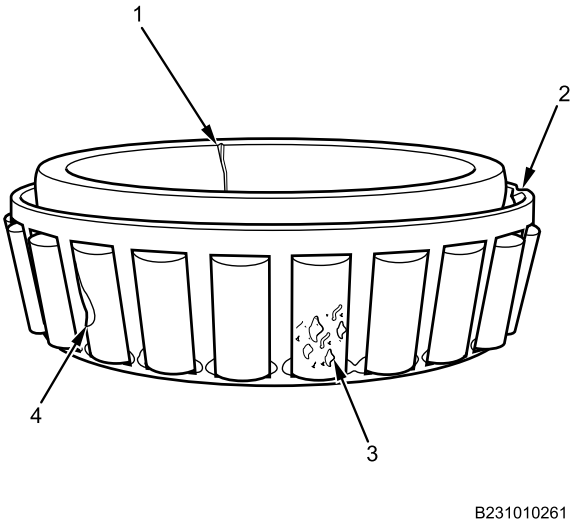

Figure 6. Bearing Cone Cage Inspection.

2. Inspect bearing cone center for cracks (Figure 6, Item 1), cage damage (Figure 6, Item 2), pitting (Figure 6, Item 3) or spalling (Figure 6, Item 4). Replace bearing cone cage if any damage or wear is found.

FRONT WHEEL HUB AND BEARING REMOVAL AND INSTALLATION - (CONTINUED)

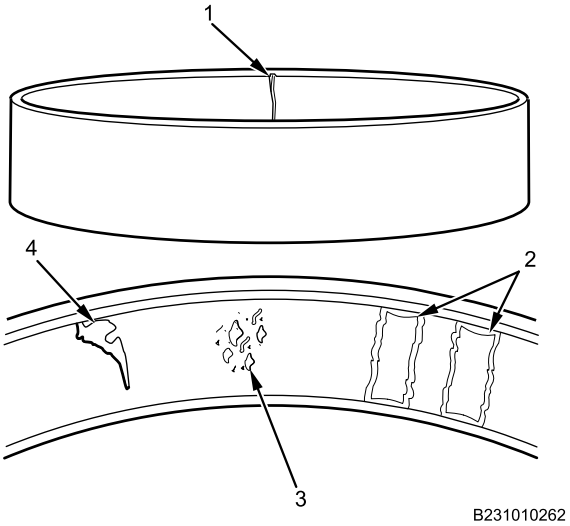

Figure 7. Tapered Roller Cup Inspection.

3. Inspect tapered roller cup for cracks (Figure 7, Item 1), etching (Figure 7, Item 2), pitting (Figure 7, Item 3), or spalling (Figure 7, Item 4). Replace tapered roller cup if any damage or wear is found.
4. If any parts are damaged, replace bearing cones and tapered roller cup. Bearing cones and tapered roller cup must be replaced as a set or improper wear will result.

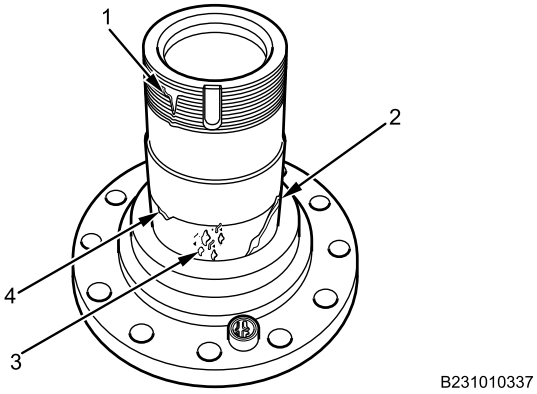

Figure 8. Spindle Inspection.

5. Inspect spindle for damaged threads (Figure 8, Item 1), scratches on bearing surface (Figure 8, Item 2), pitting (Figure 8, Item 3), or spalling (Figure 8, Item 4). If damage is found, replace spindle.

FRONT WHEEL HUB AND BEARING REMOVAL AND INSTALLATION - (CONTINUED)

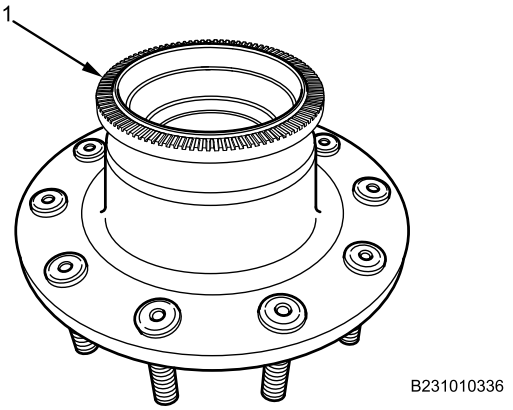

Figure 9. Antilock Brake System (ABS) Tone Ring Inspection

6. Inspect ABS tone ring (Figure 9, Item 1) for missing or damaged teeth. If damage is found, replace ABS tone ring.

END OF TASK

DISASSEMBLY

NOTE

Disassembly is necessary only if damage is found on bearing cone, tapered roller cup, or hub. If no damage is found, proceed to Installation.

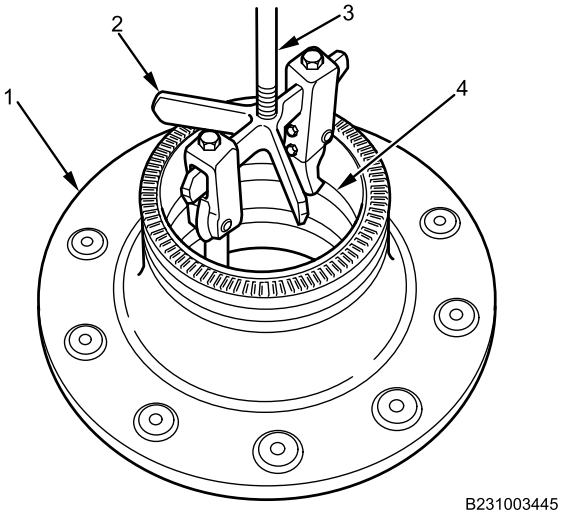

Figure 10. Two-Jaw Puller Inner Tapered Roller Cup Removal.

1. Using two-jaw puller (Figure 10, Item 2) and sliding hammer (Figure 10, Item 3) on hub (Figure 10, Item 1), move inner tapered roller cup (Figure 10, Item 4) 1/2 inch (12.7 mm).

FRONT WHEEL HUB AND BEARING REMOVAL AND INSTALLATION - (CONTINUED)

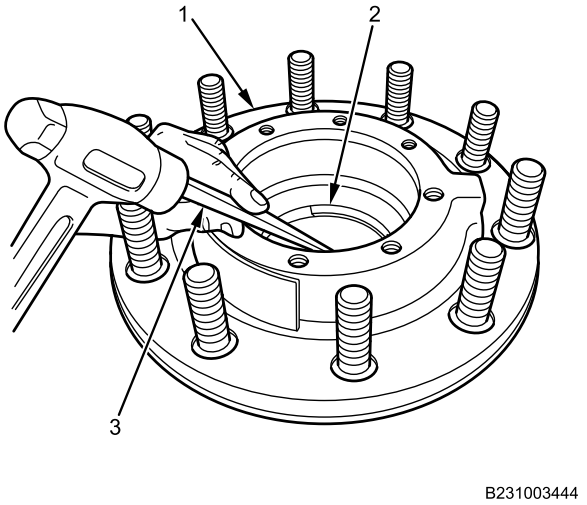

Figure 11. Inner Tapered Roller Cup Removal.

2. Using punch (Figure 11, Item 3), remove inner bearing cup (Figure 11, Item 2) from hub (Figure 11, Item 1). Discard inner tapered roller cup (Figure 11, Item 2).

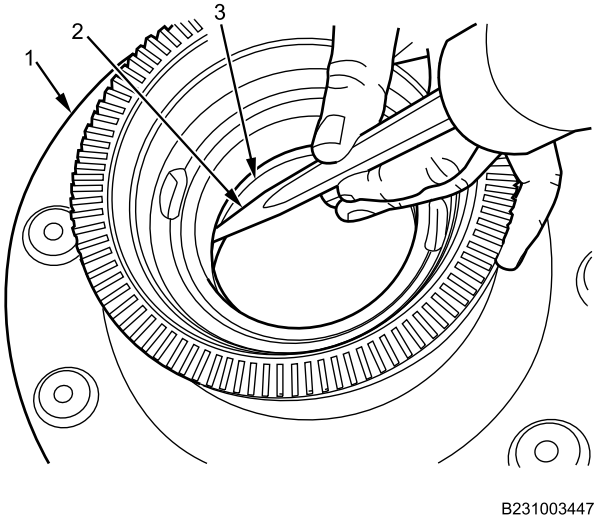

Figure 12. Outer Tapered Roller Cup.

3. Using punch (Figure 12, Item 2), remove outer tapered roller cup (Figure 12, Item 3) from hub (Figure 12, Item 1). Discard outer tapered roller cup (Figure 12, Item 3).

END OF TASK

FRONT WHEEL HUB AND BEARING REMOVAL AND INSTALLATION - (CONTINUED)

ASSEMBLY

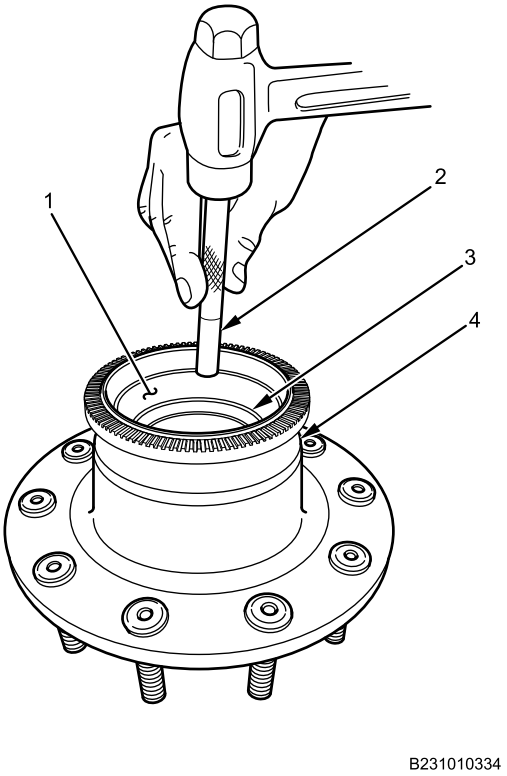

Figure 13. Inner Tapered Roller Cup.

1. Install new inner tapered roller cup (Figure 13, Item 1) into hub (Figure 13, Item 4) with brass punch (Figure 13, Item 2) until new tapered roller cup is fully to bottom of bore (Figure 13, Item 3).

FRONT WHEEL HUB AND BEARING REMOVAL AND INSTALLATION - (CONTINUED)

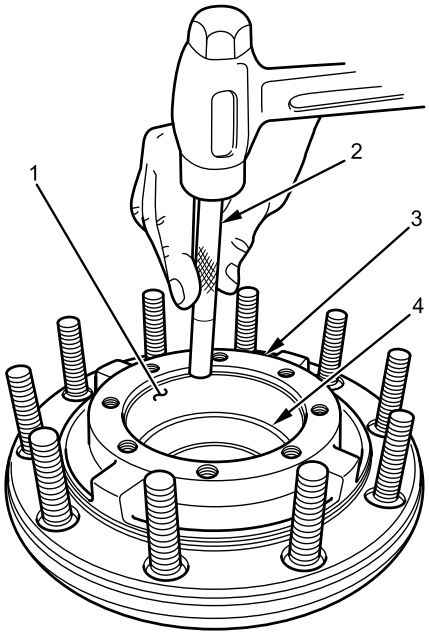

Figure 14. Outer Tapered Roller Cup.

2. Install new outer tapered roller cup (Figure 14, Item 1) into hub (Figure 14, Item 3) with brass punch (Figure 14, Item 2) until new tapered roller cup is fully to bottom of bore (Figure 14, Item 4).

FRONT WHEEL HUB AND BEARING REMOVAL AND INSTALLATION - (CONTINUED)

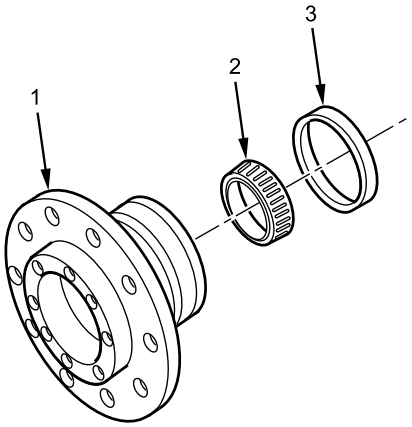

B231005041

Figure 15. Hub and Bearings.

3. Pack new inner bearing cone (Figure 15, Item 2) and inner hub cavity with wheel bearing grease until it is level with inside diameter of bearing cone.
4. Install new inner bearing cone (Figure 15, Item 2) into cup inside hub (Figure 15, Item 1).

CAUTION

Do not force or hit seal after it has touched bottom of bore, or seal may be damaged.

5. Install new seal (Figure 15, Item 3) fully to bottom of hub bore.

END OF TASK

INSTALLATION

WARNING

Silicone gasket material emits a small amount of acid vapor. Ensure work area is well ventilated. Read and carefully follow manufacturer's instructions before use. If silicone gasket material contacts eyes, follow manufacturer's emergency procedures. Seek medical assistance as soon as possible. Failure to comply may result in serious injury to personnel.

FRONT WHEEL HUB AND BEARING REMOVAL AND INSTALLATION - (CONTINUED)

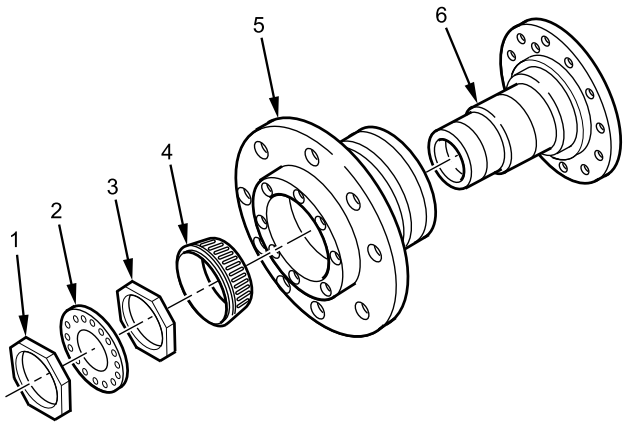

Figure 16. Hub and Spindle.

1. Apply grease to surface of spindle (Figure 16, Item 6).
2. Install hub assembly (Figure 16, Item 5) onto spindle (Figure 16, Item 6).
3. Pack outer bearing cone (Figure 16, Item 4) and outer hub cavity with wheel bearing grease until it is level with inside diameter of bearing cone.

NOTE

Ensure pin on adjusting nut faces outward.

4. Install outer bearing cone (Figure 16, Item 4) and inner wheel bearing adjusting nut (Figure 16, Item 3) onto spindle (Figure 15, Item 6).
5. Torque inner wheel bearing adjusting nut (Figure 16, Item 3) to 100 lb-ft (136 N•m) while turning hub assembly (Figure 16, Item 5) counterclockwise on spindle (Figure 16, Item 6).

NOTE

Do not rotate hub after backing off adjusting nut.

6. Back off inner wheel bearing adjusting nut (Figure 16, Item 3) 1/4 turn.

NOTE

Lockwasher should line up with stud on inner adjusting nut. If lockwasher does not line up, remove lockwasher and turn over to reposition locking holes. It may be necessary to reposition inner adjusting nut slightly for final alignment of lockwasher.

7. Install lockwasher (Figure 16, Item 2) and outer adjusting nut (Figure 16, Item 1) onto spindle (Figure 16, Item 6). Torque outer adjusting nut to 250-400 lb-ft (339-542 N•m).

FRONT WHEEL HUB AND BEARING REMOVAL AND INSTALLATION - (CONTINUED)

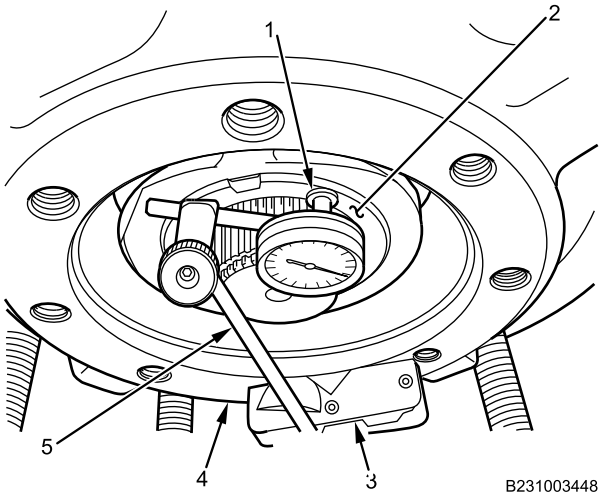

Figure 17. Dial Indicator.

8. Position dial indicator mounting base (Figure 17, Item 3) on machined face of wheel hub (Figure 17, Item 4) securely.
9. Position end of dial indicator plunger (Figure 17, Item 1) against edge of bearing spindle (Figure 17, Item 2).

NOTE

Ensure mounting arm of dial indicator does not touch spindle or other parts of vehicle.

11. Align dial indicator needle with zero on indicator face by carefully rotating indicator face.
12. Attempt to wobble wheel hub up and down while observing dial indicator.
13. Verify end play is 0.000-0.002 inch (0.000-0.05 mm). Repeat steps 5-13 as required to achieve desired end play.
14. Apply 1/8-inch continuous bead of RTV silicone sealant to hub mounting surface (Figure 17, Item 4) of drive flange.

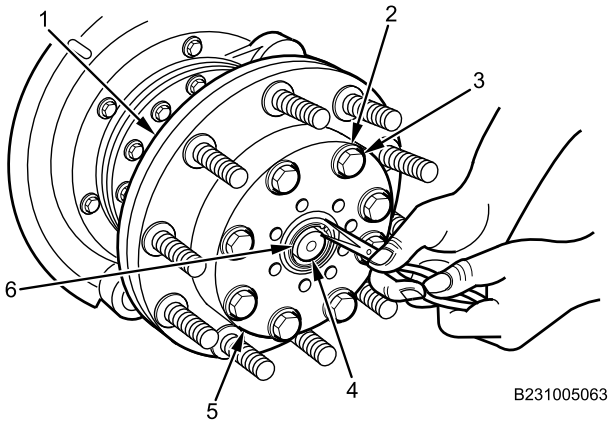

Figure 18. Snapring Installation.

15. Apply wheel bearing grease to axle shaft (Figure 18, Item 4) and inside splines of drive flange (Figure 18, Item 5).
16. Install drive flange (Figure 18, Item 5) onto hub (Figure 18, Item 1) with eight bolts (Figure 18, Item 3) and washers (Figure 18, Item 2). Torque drive flange bolts to 180-230 lb-ft (244-312 N•m).
17. Install new snapring (Figure 18, Item 6) onto end of axle shaft (Figure 18, Item 4).

FRONT WHEEL HUB AND BEARING REMOVAL AND INSTALLATION - (CONTINUED)

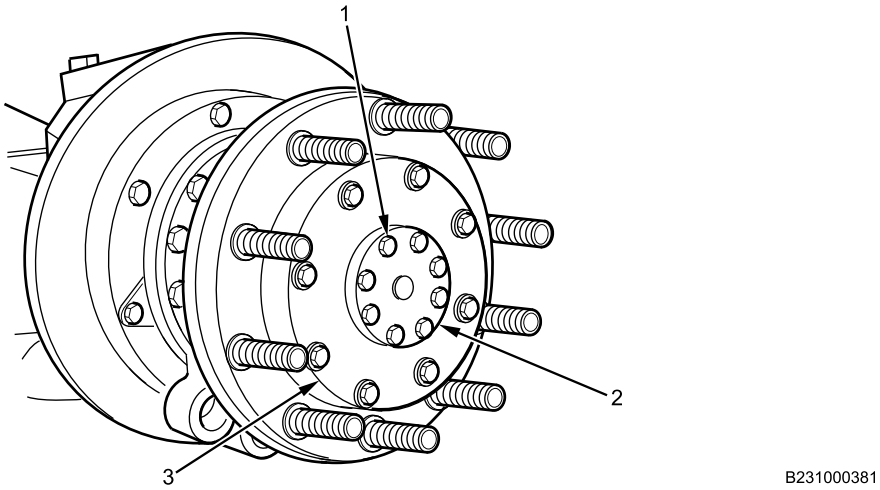

Figure 19. Hubcap.

18. Apply 1/8-inch continuous bead of RTV silicone sealant to drive flange mounting surface of hubcap (Figure 19, Item 2).
19. Install hubcap (Figure 19, Item 2) onto drive flange (Figure 19, Item 3) with eight bolts (Figure 19, Item 1) and washers. Torque bolts to 35-50 lb-ft (47-68 N•m).

END OF TASK

FOLLOW-ON MAINTENANCE

1. Install front brake drum (WP 0487).
2. Remove wheel chocks (TM 9-2355-106-10).
3. Turn MAIN POWER switch on (TM 9-2355-106-10).
4. Start engine (TM 9-2355-106-10).
5. Test drive vehicle under usual conditions to verify repair (TM 9-2355-106-10).
6. Set parking brake (TM-9-2355-106-10).
7. Set transmission in NEUTRAL (N) (TM 9-2355-106-10).
8. Turn engine off (TM 9-2355-106-10).
9. Turn MAIN POWER switch off (TM 9-2355-106-10).

END OF TASK

END OF WORK PACKAGE

FIELD MAINTENANCE

FRONT AXLE ASSEMBLY ALIGNMENT PROCEDURE

INITIAL SETUP:

Tools and Special Tools
General Mechanic's Tool Kit (GMTK) (WP 0795, Item 37)
Gauge, wheel alignment (WP 0795, Item 130)
Wrench, pipe, adjustable, 12-inch (WP 0795, Item 140)
Jack, floor, 20-ton (WP 0795, Item 59)
Jackstand, 10-ton, 19–28.5-inches (2) (WP 0795, Item 62)
Wrench, torque, 20-100 lb-ft, 3/8-inch drive (WP 0795, Item 141)

Materials/Parts
Tape (WP 0794, Item 51)
Locknut - (2) (WP 0796, Item 11)

Personnel Required
Maintainer - (2)

References
TM 9-2355-106-10
TM 9-2355-106-23P
WP 0786
WP 0782

Equipment Condition
Parking brake set (TM 9-2355-106-10)
Transmission set in NEUTRAL (N) (TM-9-2355-106-10)
Engine off (TM 9-2355-106-10)
MAIN POWER switch off (TM 9-2355-106-10)
Rear wheels chocked (TM 9-2355-106-10)

ALIGNMENT

WARNING

Before lifting vehicle off ground, make sure it is parked on level surface. Set parking brake and chock wheels. Use hydraulic jack to lift vehicle. Jackstands and hydraulic jack must be used on a stable surface capable of supporting the combined weight of the vehicle being lifted and the lifting equipment. Do not use jack alone to support vehicle. Never work under or near a vehicle supported only by jack or lifting device. Use rated jackstands under frame rails to properly support vehicle. Do not support vehicle under front and rear axles. Use additional jackstands as necessary to support vehicle components during removal and installation procedures. Failure to comply may result in damage to equipment and serious injury or death to personnel.

FRONT AXLE ASSEMBLY ALIGNMENT PROCEDURE - (CONTINUED)

CAUTION

Use steering wheel to move or alter position of front wheel and tire assemblies. If necessary, start engine and drive vehicle a short distance to ensure proper positioning of wheel and tire assemblies. Do not use pry bars or steel hammers to alter position of front wheel and tire assemblies. Failure to comply may result in damage to equipment.

Do not support vehicle under axle, always place jackstands under frame rails behind front axle and in front of rear axle or vehicle damage may result.

NOTE

Toe is the difference between rear and front tread widths with tires pointed straight ahead. Toe is the key component affecting tire wear and vehicle handling. Generally, optimum handling and tire life occur when toe is set at 0–1/32 inch (0–1 mm) toe-in (positive).

Toe-in is the amount that front wheels are closer together at the front of each tire than at the back of the tires. Negative toe values indicate a toe-out condition.

Toe-in adjustment is the most important alignment factor to check when attempting to extend tire life. Toe-in should be set only by trained personnel using calibrated wheel alignment gauges. Toe-in can be increased or decreased by adjusting the length of front tie rod.

Incorrect toe-in will result in rapid tire wear. Excessive toe-in shows up initially as irregular wear: more wear will occur on outside grooves than on inside grooves of each tire, and more so on right front than on left front tires. Excessive toe-out will show a reverse effect: more wear will occur on inside grooves than on outside grooves, and more so on left front than on right front tires.

Check front tires at regular intervals. Check front alignment if tires start to show uneven wear or front suspension has been subjected to extremely heavy service or severe impact loads. Before checking and adjusting alignment, inspect wheel bearings, tie rod ends, drag links, shock absorbers, and tire inflation. Correct where necessary.

FRONT AXLE ASSEMBLY ALIGNMENT PROCEDURE - (CONTINUED)

1. Raise front of vehicle with 20-ton floor jack. Ensure wheels are raised above ground. Support vehicle with 10-ton jackstands on frame rails behind axle.

NOTE

Measure width of tire to locate center of tread to aid in placement of tape.

2. Position front tires (Figure 1, Item 1) pointing straight ahead.

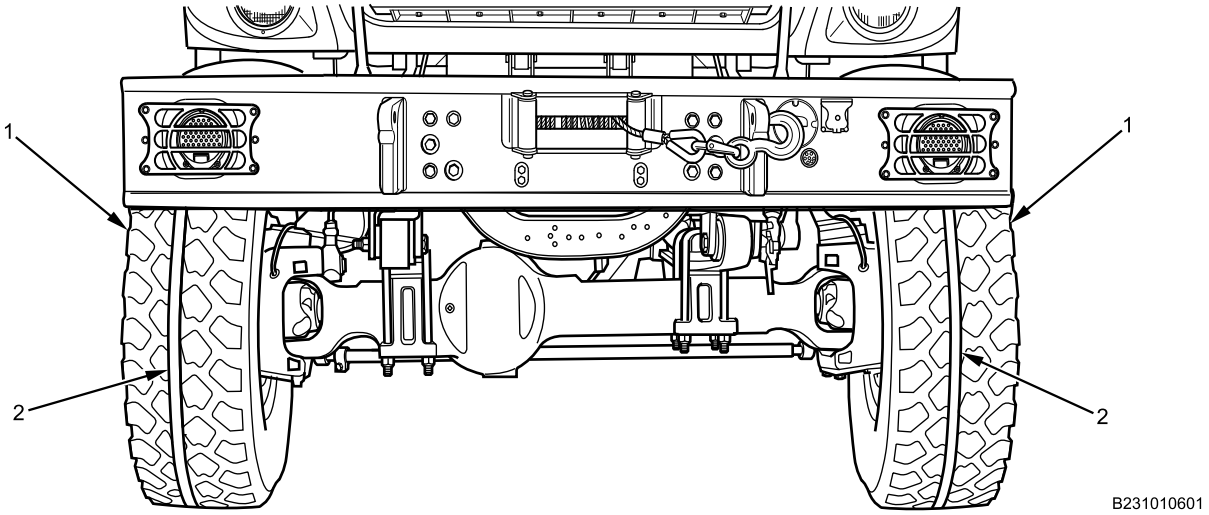

Figure 1. Preparing Tires.

3. Rotate tires (Figure 1, Item 1) and apply tape (Figure 1, Item 2) in center of tread around circumference of front tires.
4. Position wheel alignment gauge (Figure 2, Item 2) as close to centerline (Figure 2, Item 3) of front tires (Figure 2, Item 1) as possible.

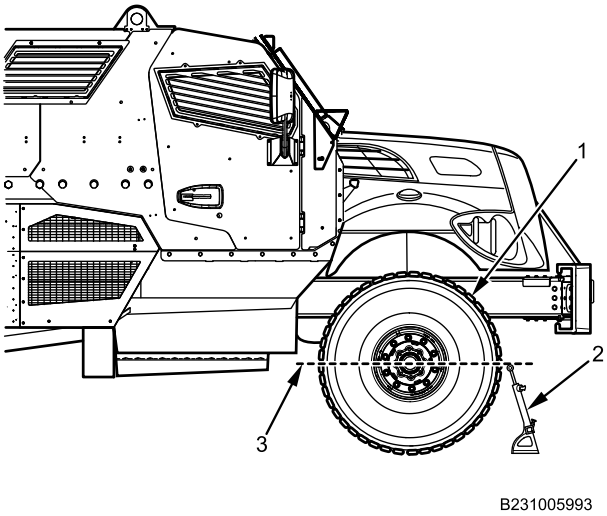

Figure 2. Positioning Wheel Alignment Gauge.

FRONT AXLE ASSEMBLY ALIGNMENT PROCEDURE - (CONTINUED)

NOTE

Do not allow wheel alignment gauge to move while rotating tires.

5. With assistant, secure wheel alignment gauge (Figure 3, Item 3) and rotate front tires (Figure 3, Item 2) by hand to scribe a line on tape (Figure 3, Item 1) around circumference of tire.

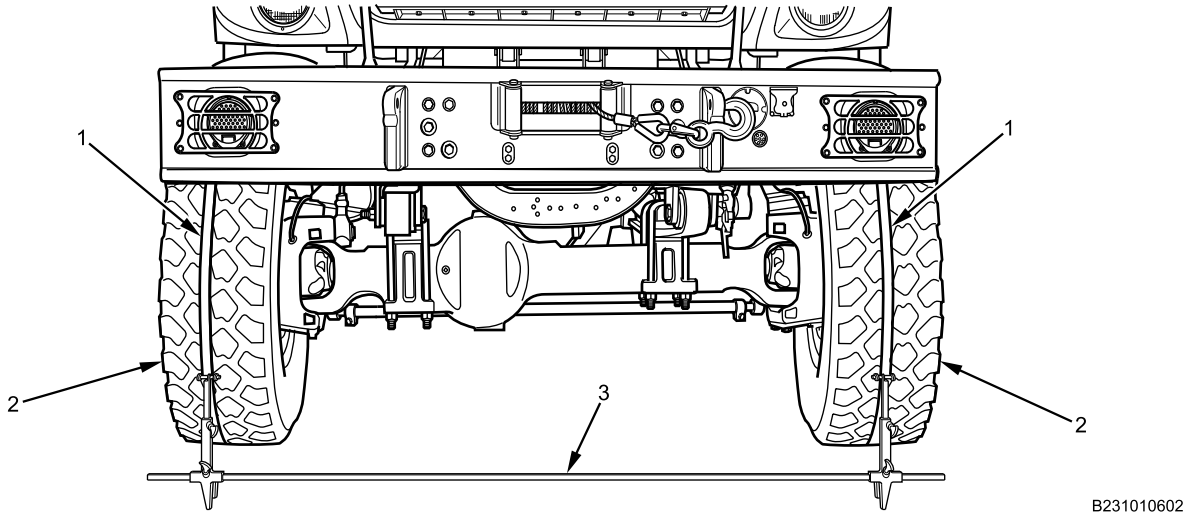

Figure 3. Scribing Line on Tires.

NOTE

The difference in measurement between A and B is minimal. Accurate measuring is required.

6. Measure and record distance A between lines scribed at front of tires (Figure 4, Item 1).

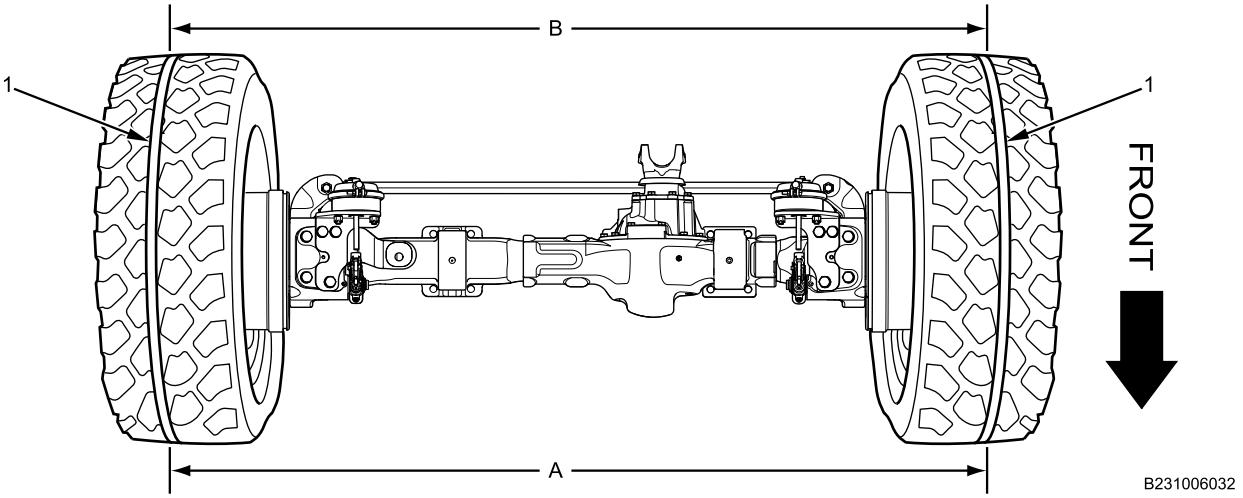

Figure 4. Toe Measurement, Viewed from Above.

7. Measure and record distance B between lines scribed at rear of tires (Figure 4, Item 1).

FRONT AXLE ASSEMBLY ALIGNMENT PROCEDURE - (CONTINUED)

NOTE

Proper toe-in is 0–1/32 inch (0–1 mm). A positive toe value indicates a toe-in condition. A negative toe value indicates toe-out condition.

8. Subtract measurement A from measurement B to calculate toe value.

NOTE

Perform steps 9-11 if necessary to adjust toe value. If toe-in is between 0–1/32 inch (0–1 mm) proceed to Step 16.

9. Loosen bolt (Figure 5, Item 3) and locknut on tie rod clamp (Figure 5, Item 1) at both ends of tie rod (Figure 5, Item 2). Remove and discard locknuts.

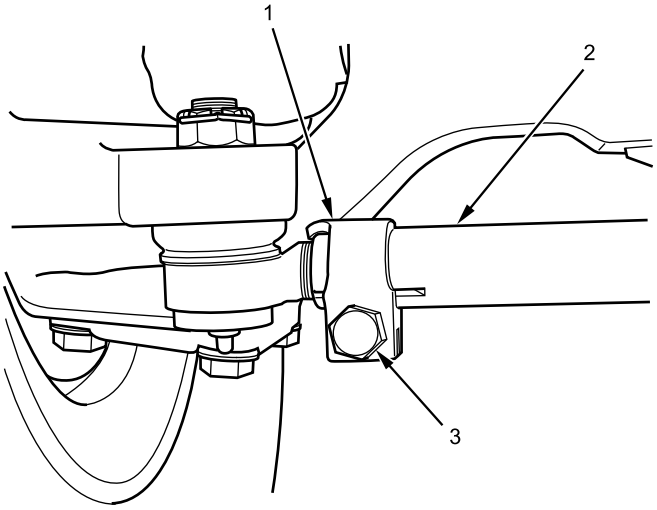

B231002623

Figure 5. Toe Adjustment.

NOTE

Toe-in can be increased or decreased by adjusting the length of the tie rod.

10. Using pipe wrench, rotate tie rod (Figure 5, Item 2) to obtain proper toe-in measurement.

WARNING

Do not overtighten tie rod clamp bolt and locknut. Overtightening can cause severe binding of clamp on tie rod threads, resulting in premature failure of tie rod ends. Failure to comply may result in damage to vehicle and injury to personnel.

11. Install new locknut on bolt (Figure 5, Item 3) on tie rod clamp (Figure 5, Item 1) at both ends of tie rod (Figure 5, Item 2). Torque to 80-90 lb-ft (108-122 N•m).

FRONT AXLE ASSEMBLY ALIGNMENT PROCEDURE - (CONTINUED)

12. Measure and record distance A between lines scribed at front of tires (Figure 6, Item 1).

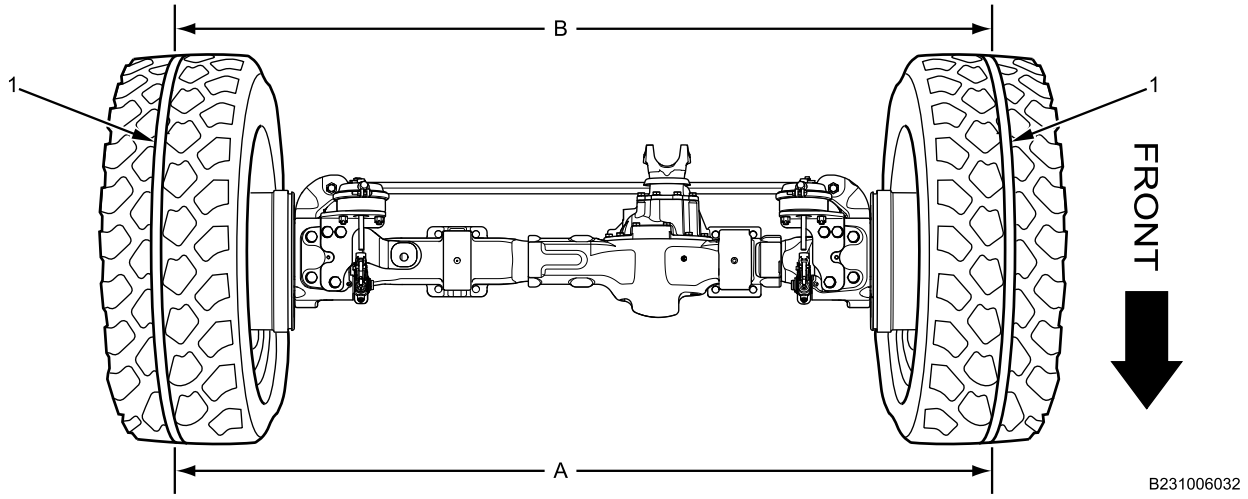

Figure 6. Toe Measurement, Viewed from Above.

13. Measure and record distance B between lines scribed at rear of tires (Figure 6, Item 1).

NOTE

Proper toe-in is 0–1/32 inch (0–1 mm). A positive toe value indicates a toe-in condition. A negative toe value indicates toe-out condition.

14. Subtract measurement A from measurement B to calculate toe value.
15. Repeat steps 9-14 until correct toe value has been achieved.
16. Using 20-ton floor jack, remove 10-ton jackstands, and lower vehicle to floor.

END OF TASK

FOLLOW-ON MAINTENANCE

1. Turn MAIN POWER switch on (TM 9-2355-106-10).
2. Start engine (TM 9-2355-106-10).
3. While in parked position, verify normal movement of steering system components (TM 9-2355-106-10).
4. Remove wheel chocks (TM 9-2355-106-10).
5. Test drive and verify normal vehicle steering and handling (TM 9-2355-106-10).
6. Set vehicle parking brake (TM 9-2355-106-10).
7. Set transmission in NEUTRAL (N) (TM 9-2355-106-10).
8. Turn engine off (TM 9-2355-106-10).
9. Turn MAIN POWER switch off (TM 9-2355-106-10).

END OF TASK

END OF WORK PACKAGE

FIELD MAINTENANCE

FRONT AXLE BREATHER REMOVAL AND INSTALLATION

INITIAL SETUP:

Tools and Special Tools
General Mechanic's Tool Kit (GMTK) (WP 0795, Item 37)

Materials/Parts
Gloves (WP 0794, Item 18)
Goggles, industrial (WP 0794, Item 20)
Rag (WP 0794, Item 39)

References
TM 9-2355-106-10
TM 9-2355-106-23P
WP 0786
WP 0782

Equipment Condition
Parking brake set (TM 9-2355-106-10)
Transmission set in NEUTRAL (N) (TM 9-2355-106-10)
Engine off (TM 9-2355-106-10)
MAIN POWER switch off (TM 9-2355-106-10)
Wheels chocked (TM 9-2355-106-10)

WARNING

Use care when working with hot axle differential and differential fluid during maintenance procedures. Wear protective goggles, work gloves, and long sleeves to avoid injury. Avoid contact with hot differential oil or sump when draining differential oil. If differential oil temperature is above 220°F (104°C), allow differential oil to cool before draining oil from axle. Failure to comply may result in serious injury or death to personnel.

CAUTION

Clean all dirt from front axle breather, breather hose, and surrounding area before removal. Do not allow dirt and debris to enter differential case housing. Failure to comply may result in damage to front differential.

NOTE

Note position of breather hose adapter before removal.

FRONT AXLE BREATHER REMOVAL AND INSTALLATION - (CONTINUED)

REMOVAL

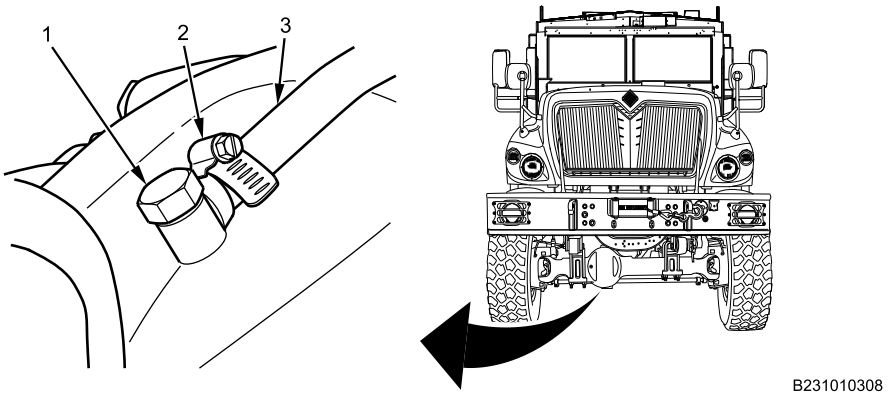

Figure 1. Front Axle Breather Hose Clamp Removal from Breather.

1. Remove hose clamp (Figure 1, Item 2) fastening breather hose (Figure 1, Item 3) to front axle breather (Figure 1, Item 1).

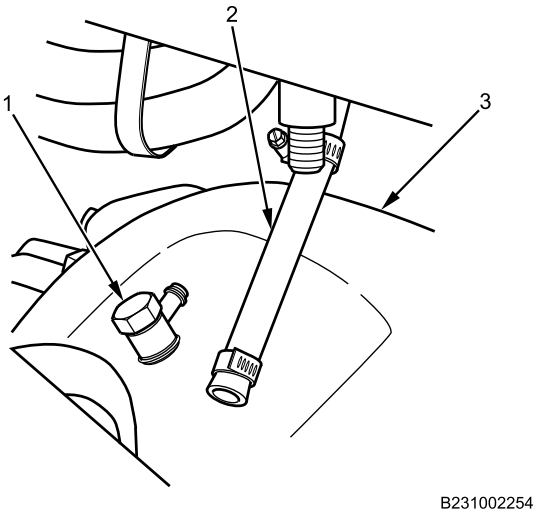

Figure 2. Front Axle Breather Removal from Differential Case.

2. Remove breather hose (Figure 2, Item 2) from front axle breather (Figure 2, Item 1). Set breather hose aside.
3. Remove front axle breather (Figure 2, Item 1) from differential case housing (Figure 2, Item 3).

END OF TASK

FRONT AXLE BREATHER REMOVAL AND INSTALLATION - (CONTINUED)

INSTALLATION

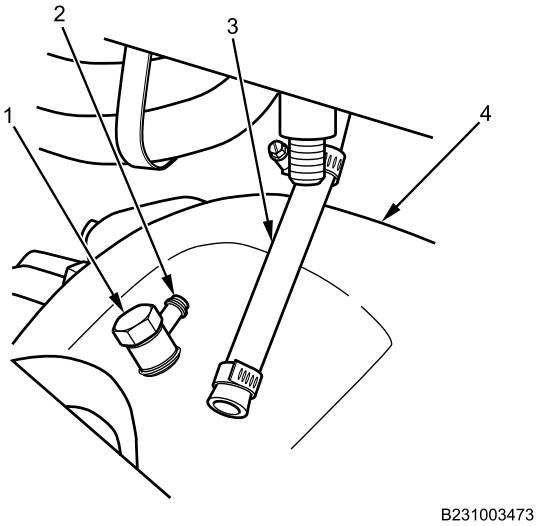

Figure 3. Front Axle Breather Installation.

1. Install front axle breather (Figure 3, Item 1) in breather access hole on differential case housing (Figure 3, Item 4).
2. Tighten front axle breather (Figure 3, Item 1) securely, but make sure hose adapter fitting (Figure 3, Item 2) is positioned as noted in removal process for proper installation to breather hose (Figure 3, Item 3).

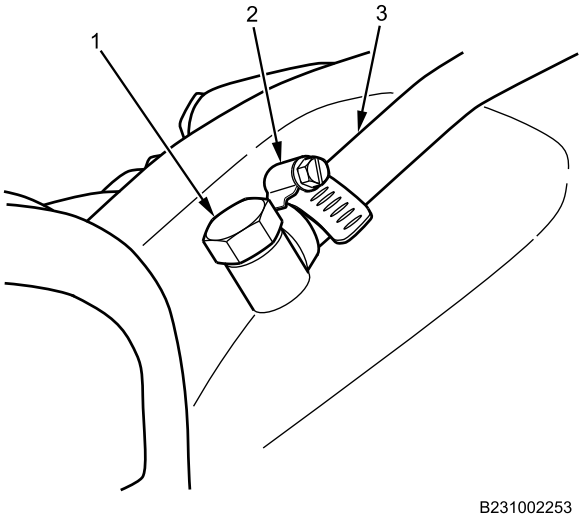

Figure 4. Breather Hose Installed on Front Axle Breather.

3. Install breather hose (Figure 4, Item 3) on front axle breather (Figure 4, Item 1) with hose clamp (Figure 4, Item 2). Tighten hose clamp securely.

END OF TASK

FRONT AXLE BREATHER REMOVAL AND INSTALLATION - (CONTINUED)

FOLLOW-ON MAINTENANCE

1. Remove wheel chocks (TM 9-2355-106-10).

END OF TASK

END OF WORK PACKAGE

FIELD MAINTENANCE

FRONT AXLE DIFFERENTIAL DRAIN/FILL PROCEDURE

INITIAL SETUP:

Tools and Special Tools
General Mechanic's Tool Kit (GMTK) (WP 0795, Item 37)
Wrench, torque, 20-100 lb-ft, 3/8-inch drive (WP 0795, Item 141)
Adapter, socket wrench, 3/8-inch drive female - 1/2-inch male (WP 0795, Item 2)
Pan, drain, 5-gal. capacity (WP 0795, Item 75)

Materials/Parts
Gloves (WP 0794, Item 18)
Rag (WP 0794, Item 39)
Goggles, industrial (WP 0794, Item 20)
Lubricating oil (WP 0794, Item 28)

References
TM 9-2355-106-10
TM 9-2355-106-23P
WP 0786
WP 0782

Equipment Condition
Parking brake set (TM 9-2355-106-10)
Transmission set in NEUTRAL (N) (TM 9-2355-106-10)
Engine shut off (TM 9-2355-106-10)
MAIN POWER switch off (TM 9-2355-106-10)
Wheels chocked (TM 9-2355-106-10)

WARNING

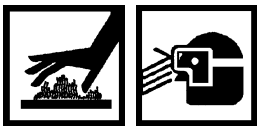

Use care when working with hot axle differential case and differential fluid. Wear goggles, work gloves, and long sleeves for protection. Avoid contact with hot differential oil or sump when draining oil. If oil temperature is above 220°F (104°C), allow to cool before draining from axle. Failure to comply may result in serious injury or death to personnel.

CAUTION

Do not operate engine with differential case oil drained from front axle system. Failure to comply may result in severe damage to front axle.

FRONT AXLE DIFFERENTIAL DRAIN/FILL PROCEDURE - (CONTINUED)

DRAIN

1. Ensure vehicle is parked on a level surface.

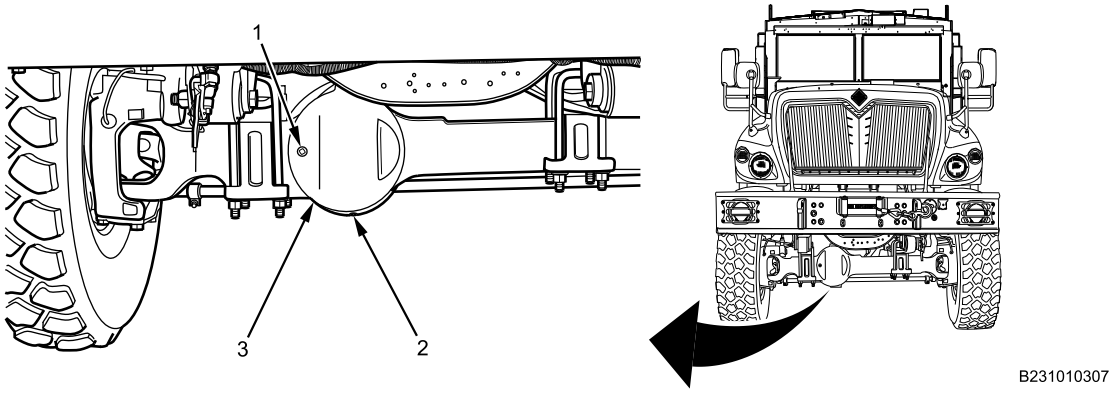

Figure 1. Front Axle Differential Case.

2. Place drain pan under front axle differential case (Figure 1, Item 3).
3. Remove drain plug (Figure 1, Item 2) from bottom of front axle differential case (Figure 1, Item 3). Set drain plug aside.
4. Drain differential fluid from front axle differential case (Figure 1, Item 3) into drain pan. Clean drain plug (Figure 1, Item 2) opening of loose debris and contaminants.
5. Remove fill plug (Figure 1, Item 1) from front axle differential case (Figure 1, Item 3). Set fill plug aside.

END OF TASK

FILL

1. Install magnetic drain plug (Figure 2, Item 2) and torque drain plug to 35-50 lb-ft (48-68 N•m).

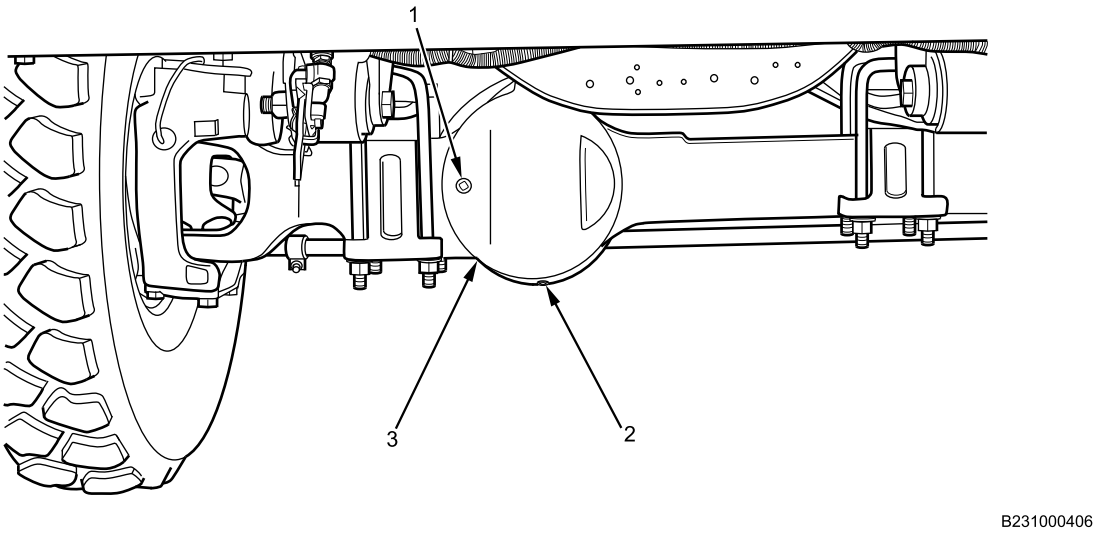

Figure 2. Front Axle Differential Case.

2. Access hole opening for fill plug (Figure 2, Item 1) and begin filling front axle differential case (Figure 2, Item 3) with Meritor GL-5, SAE 85W/140 gear oil axle differential lubricant.

FRONT AXLE DIFFERENTIAL DRAIN/FILL PROCEDURE - (CONTINUED)

3. Fill front axle differential case (Figure 2, Item 3) with oil until oil starts to come out of differential case hole for fill plug (Figure 2, Item 1). Lubricant fluid should be level with differential fill plug hole.
4. Install and torque fill plug (Figure 2, Item 1) to 35-50 lb-ft (48-68 N•m).
5. Remove drain pan.
6. Clean up all fluid spills with rags.

END OF TASK

FOLLOW-ON MAINTENANCE

1. Turn MAIN POWER switch on (TM 9-2355-106-10).
2. Start engine (TM 9-2355-106-10).
3. Check for leaks.
4. Remove wheel chocks (TM 9-2355-106-10).
5. Road test vehicle 30 minutes to verify normal operation.
6. Set vehicle parking brake (TM 9-2355-106-10).
7. Set transmission in NEUTRAL (N) (TM 9-2355-106-10).
8. Turn engine off (TM 9-2355-106-10).
9. Turn MAIN POWER switch off (TM 9-2355-106-10).
10. Install wheel chocks (TM 9-2355-106-10).
11. Recheck for leaks and fluid level after cool-down.
12. Remove wheel chocks (TM 9-2355-106-10).

END OF TASK

END OF WORK PACKAGE

FIELD MAINTENANCE

UPPER AND LOWER KING PIN BUSHING AND AXLE SHAFT OIL SEAL REMOVAL AND INSTALLATION

INITIAL SETUP:

Tools and Special Tools
General Mechanic's Tool Kit (GMTK) (WP 0795, Item 37)
Puller set, mechanical (WP 0795, Item 78)
Pneumatic Abrasive Cutting Tool Kit (WP 0795, Item 76)

Materials/Parts
Goggles, industrial (WP 0794, Item 20)
Gloves (WP 0794, Item 18)
Seal (WP 0796, Item 33)
Plug, expansion (WP 0796, Item 43)
Bushing (WP 0796, Item 41)

Personnel Required
Maintainer - (2)

References
TM 9-2355-106-10
TM 9-2355-106-23P
WP 0786
WP 0782

Equipment Condition
Parking brake set (TM 9-2355-106-10)
Transmission set in NEUTRAL (N) (TM 9-2355-106-10)
Engine shut off (TM 9-2355-106-10)
MAIN POWER switch off (TM 9-2355-106-10)
Wheels chocked (TM 9-2355-106-10)
Steering knuckle and king pins removed (WP 0477)

REMOVAL

NOTE

There are left and right, and upper and lower king pin bushings. This procedure covers lower right; others are similar.

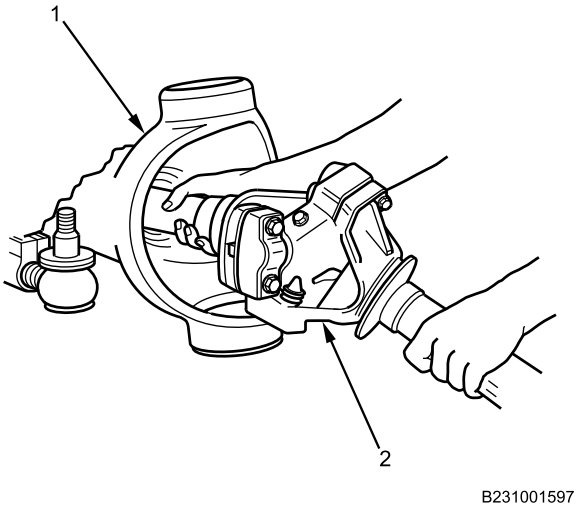

Figure 1. Drive Shaft Removal.

1. Remove drive shaft (Figure 1, Item 2) from axle housing (Figure 1, Item 1) by pulling straight out.

UPPER AND LOWER KING PIN BUSHING AND AXLE SHAFT OIL SEAL REMOVAL AND INSTALLATION - (CONTINUED)

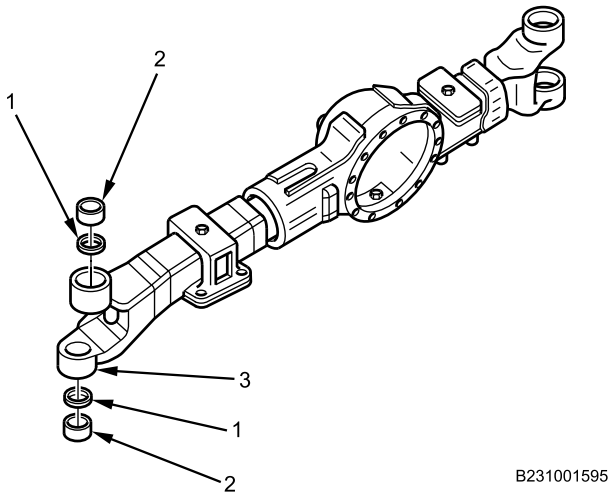

Figure 2. Axle Housing.

2. Inspect axle housing bearing surface (Figure 2, Item 3) and king pin bushings (Figure 2, Item 2) for excessive wear. Replace as necessary.

WARNING

If expansion plugs are tack welded to axle housing, it will be necessary to grind off tack welds. Use care not to damage king pin bore. Wear safety goggles while grinding tack welds. Failure to comply may result in damage to equipment and serious injury to personnel.

3. Grind tack welds off expansion plug (Figure 2, Item 1) if expansion plug is tack welded to axle housing.

UPPER AND LOWER KING PIN BUSHING AND AXLE SHAFT OIL SEAL REMOVAL AND INSTALLATION - (CONTINUED)

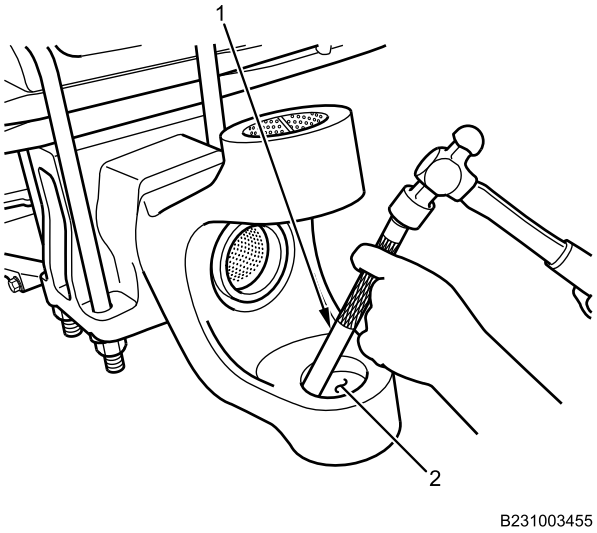

Figure 3. King Pin Socket and Bushing Removal.

WARNING

Always wear safety goggles when using a hammer and punch to drive expansion plug and king pin bushing. Failure to comply may result in damage to equipment and serious injury to personnel.

4. Using brass punch (Figure 3, Item 1), drive expansion plug and king pin bushing (Figure 3, Item 2) towards outside of axle housing. Discard expansion plug and bushing.

UPPER AND LOWER KING PIN BUSHING AND AXLE SHAFT OIL SEAL REMOVAL AND INSTALLATION - (CONTINUED)

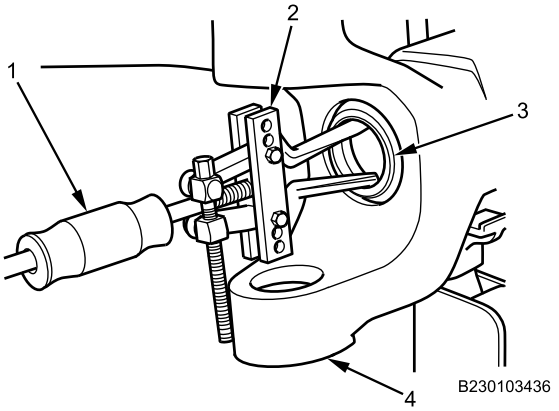

Figure 4. Axle Shaft Oil Seal Removal.

5. Using slide hammer (Figure 4, Item 1) and attachment (Figure 4, Item 2), remove axle shaft oil seal (Figure 4, Item 3) from axle housing (Figure 4, Item 4). Discard oil seal.

END OF TASK

INSTALLATION

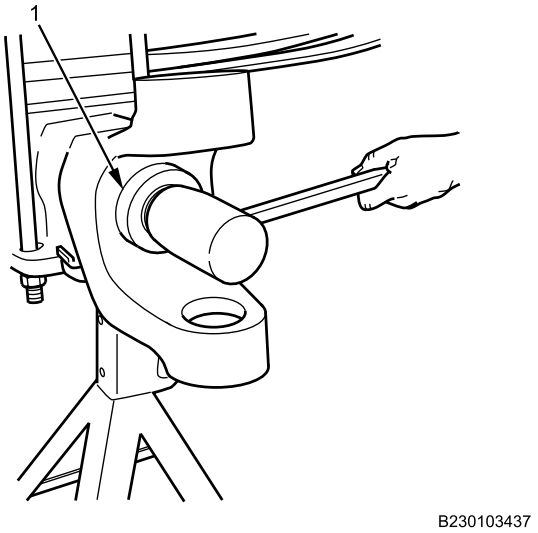

Figure 5. Axle Shaft Oil Seal Installation.

1. Using cup-type seal installer (Figure 5, Item 1), seat new axle shaft oil seal in axle housing.

UPPER AND LOWER KING PIN BUSHING AND AXLE SHAFT OIL SEAL REMOVAL AND INSTALLATION - (CONTINUED)

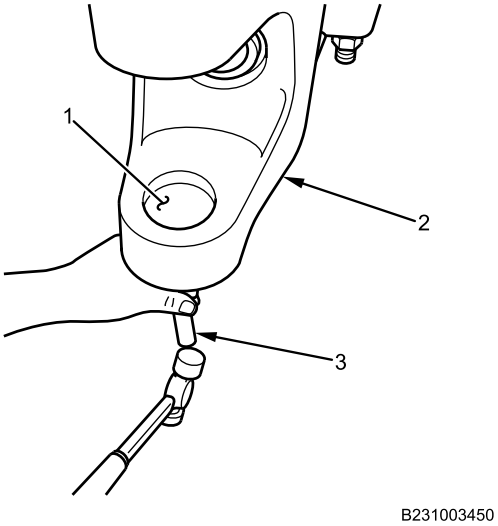

Figure 6. Socket Plug Installation.

2. Position concave side of new expansion plug (Figure 6, Item 1) in axle housing (Figure 6, Item 2) against counterbore in axle housing. Strike convex side of socket plug with punch (Figure 6, Item 3) to flatten and seat plug.

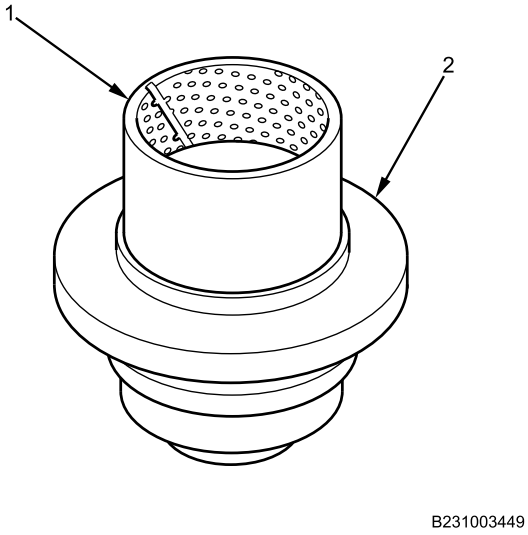

Figure 7. King Pin Bushing on Driver.

3. Position king pin bushing (Figure 7, Item 1) on driver (Figure 7, Item 2).

UPPER AND LOWER KING PIN BUSHING AND AXLE SHAFT OIL SEAL REMOVAL AND INSTALLATION - (CONTINUED)

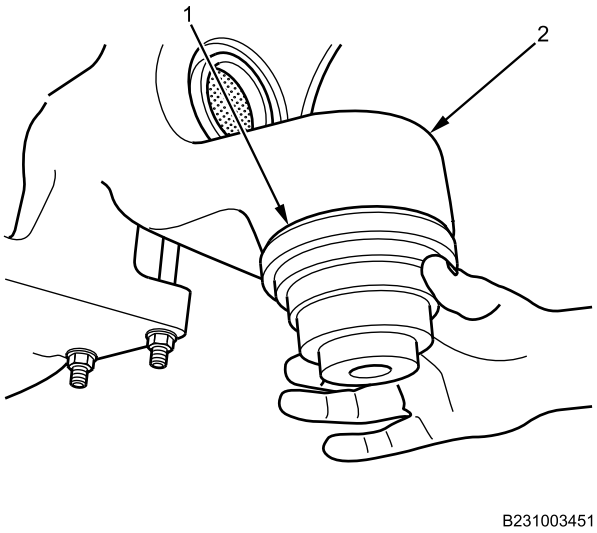

Figure 8. King Pin Bushing Installation.

4. With assistant maintaining bushing and driver (Figure 8, Item 1) position, tap driver evenly until bushing is even with outside of housing (Figure 8, Item 2).

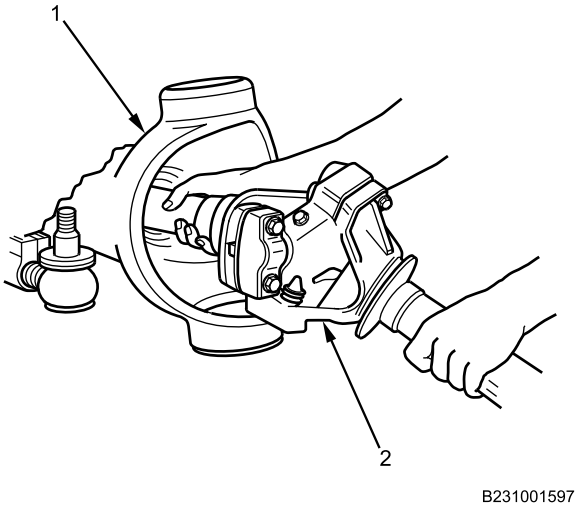

Figure 9. Drive Shaft.

5. Install drive shaft (Figure 9, Item 2) into axle housing (Figure 9, Item 1).
6. Clean all grease and dirt from king pin bore.

END OF TASK

FOLLOW-ON MAINTENANCE

1. Install steering knuckle and king pins (WP 0477).
2. Remove wheel chocks (TM 9-2355-106-10).

END OF TASK

END OF WORK PACKAGE

FIELD MAINTENANCE

STEERING ARM REMOVAL AND INSTALLATION

INITIAL SETUP:

Tools and Special Tools
General Mechanic's Tool Kit (GMTK) (WP 0795, Item 37)
Puller set, mechanical (WP 0795, Item 78)
Transmission jack, 1-ton (WP 0795, Item 126)
Wrench, torque, 50-250 lb-ft, 1/2-inch drive (WP 0795, Item 143)
Multiplier, torque (WP 0795, Item 74)
Socket, standard, 3/4-inch drive, 12-pt, 1-5/16 inch (WP 0795, Item 109)
Handle, ratchet, 3/4-inch drive, 17 inches long (WP 0795, Item 47)

Materials/Parts
Goggles, industrial (WP 0794, Item 20)
Gloves (WP 0794, Item 18)
Cotter pin (WP 0796, Item 19)
Sealing compound (WP 0794, Item 45)

References
TM 9-2355-106-10
TM 9-2355-106-23P
WP 0786
WP 0782

Equipment Condition
Parking brake set (TM 9-2355-106-10)
Transmission set in NEUTRAL (N) (TM 9-2355-106-10)
Engine shut off (TM 9-2355-106-10)
MAIN POWER switch off (TM 9-2355-106-10)
Wheels chocked (TM 9-2355-106-10)
Left front tire removed (WP 0530)
Left front brake chamber removed (WP 0514)

REMOVAL

WARNING

Do not disconnect any air line or fitting until system pressure has been relieved. Hoses may whip and injure personnel, and air under pressure can penetrate skin. Failure to comply may result in serious injury or death to personnel.

Do not use heat on components to facilitate removal of steering arms. Heat may weaken other connecting parts. Apply lubricating spray and let soak for a few minutes, then use breaker bar to break loose. Use correct socket wrench to avoid damaging boltheads. Failure to comply may result in damage to equipment and serious injury or death to personnel.

Wheel and tire assemblies are heavy. Do not attempt to lift wheel and tire assemblies without assistance from crewmember. Wear safety goggles and work gloves. Failure to comply may result in damage to equipment and serious injury or death to personnel.

STEERING ARM REMOVAL AND INSTALLATION - (CONTINUED)

1. Position jackstand (Figure 1, Item 5) under axle (Figure 1, Item 6) as shown.

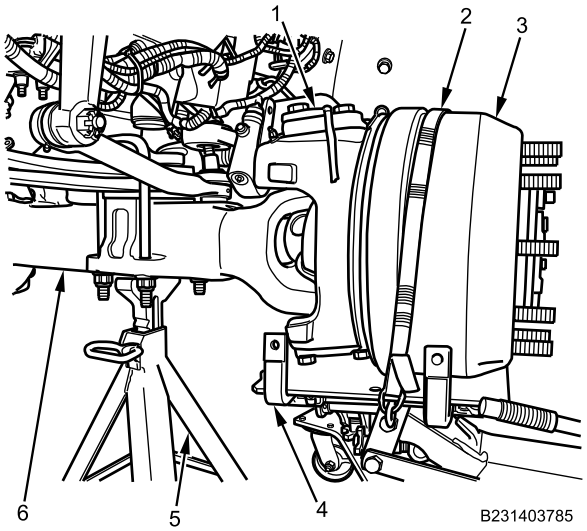

Figure 1. Steering Arm Set-Up for Removal.

2. Position transmission jack (Figure 1, Item 4) under steering knuckle (Figure 1, Item 1) and wheel hub (Figure 1, Item 3).
3. Install strap around wheel hub (Figure 1, Item 3) and transmission jack (Figure 1, Item 4).
4. Remove cotter pin (Figure 2, Item 1) and hex nut (Figure 2, Item 3) from drag link stud (Figure 2, Item 2) at steering arm (Figure 2, Item 4). Discard cotter pin (Figure 2, Item 1).

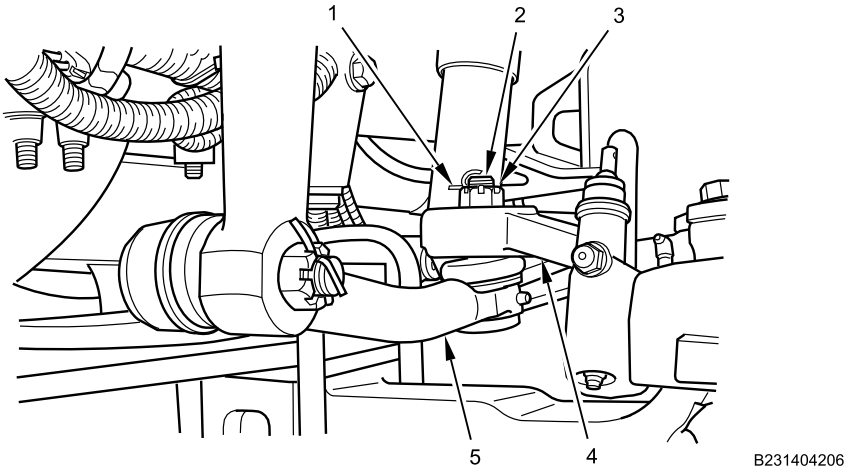

Figure 2. Steering Arm.

5. Disconnect drag link (Figure 2, Item 5) from steering arm (Figure 2, Item 4) using puller set and hammer.

STEERING ARM REMOVAL AND INSTALLATION - (CONTINUED)

6. Remove three bolts (Figure 3, Item 1) and brake chamber mounting bracket (Figure 3, Item 3). Set bracket aside, taking care not to damage ABS sensor wire (Figure 3, Item 2).

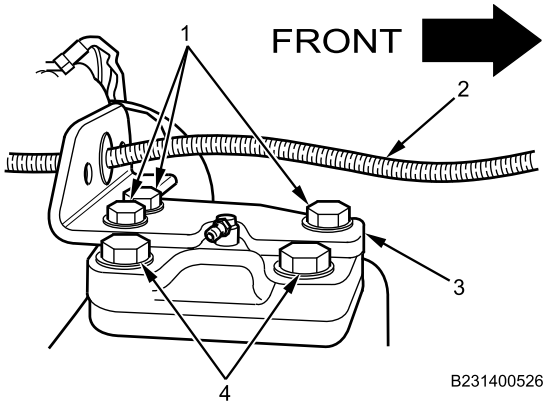

Figure 3. Brake Chamber Mounting Bracket.

7. Remove two remaining steering arm bolts (Figure 3, Item 4)
8. Remove steering arm (Figure 4, Item 1) from knuckle (Figure 4, Item 3).
9. Inspect upper bearing surfaces of knuckle and steering arm (Figure 4, Item 2) for any signs of wear or damage. Replace as necessary.

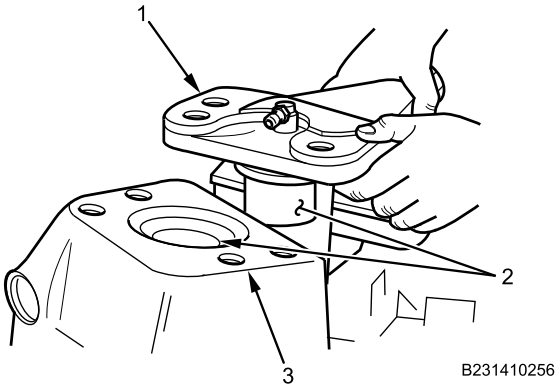

Figure 4. Steering Arm and Knuckle.

END OF TASK

STEERING ARM REMOVAL AND INSTALLATION - (CONTINUED)

INSTALLATION

1. Install steering arm (Figure 5, Item 1) into top of steering knuckle (Figure 5, Item 2).

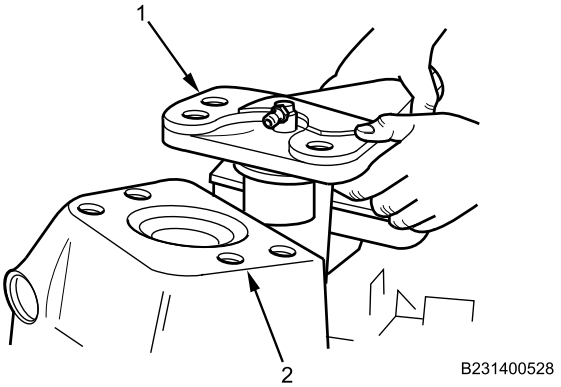

Figure 5. Steering Arm and Knuckle.

WARNING

Thread sealing compound is harmful to skin and eyes. If thread sealing compound contacts eyes, rinse thoroughly and contact physician if irritation persists. If skin is contacted, wash thoroughly with soap and water. Failure to comply may result in serious injury to personnel.

2. Apply thread sealing compound to threads of mounting bolts (Figure 6, Item 1 and 4).
3. Align boltholes and loosely install two steering arm mounting bolts (Figure 6, Item 4).
4. Install air brake chamber mounting bracket (Figure 6, Item 3) and insert remaining three mounting bolts (Figure 6, Item 1). Ensure ABS sensor wire is not pinched and moves freely (Figure 6, Item 2).
5. Torque all mounting bolts (Figure 6, Item 1 and 4) to 100-115 lb-ft (136-156 N•m).

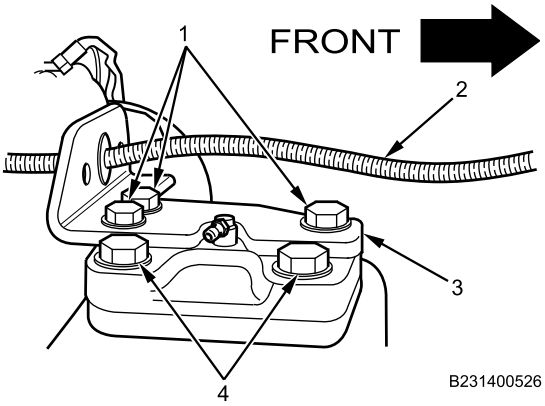

Figure 6. Brake Chamber Bracket.

6. Connect drag link (Figure 7, Item 5) to steering arm (Figure 7, Item 4) with hex nut (Figure 7, Item 3). Torque hex nut to specification: stud size 3/4 inch – 85-105 lb-ft (116-143 N•m); stud size 7/8 inch – 120-160 lb-ft (163-218 N•m).

STEERING ARM REMOVAL AND INSTALLATION - (CONTINUED)

WARNING

When installing new cotter pin, tighten nut until slot appears and insert cotter pin. Never back off nut to install cotter pin. Failure to comply may result in damage to equipment, causing loss of steering control and possible injury or death to personnel.

7. Install new cotter pin (Figure 7, Item 1) in drag link stud (Figure 7, Item 2).

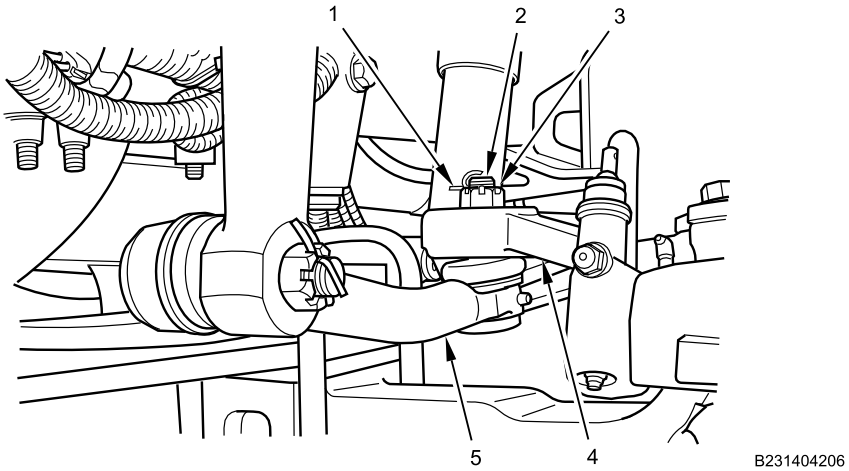

Figure 7. Steering Arm.

STEERING ARM REMOVAL AND INSTALLATION - (CONTINUED)

8. Remove strap (Figure 8, Item 2) from wheel hub (Figure 8, Item 3) and transmission jack (Figure 8, Item 4).
9. Remove transmission jack (Figure 8, Item 4) from wheel hub (Figure 8, Item 3) and steering knuckle (Figure 8, Item 1).

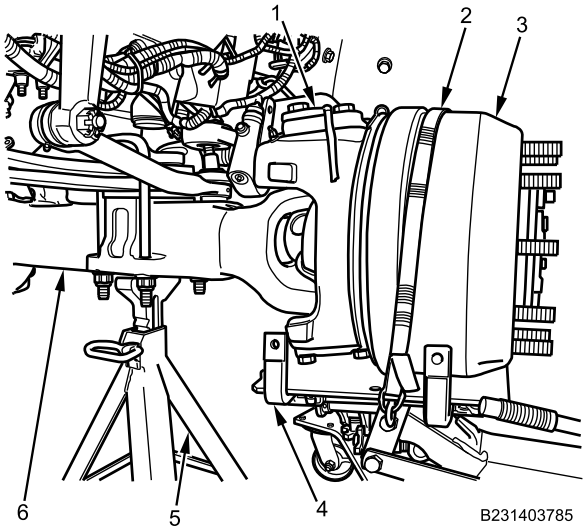

Figure 8. Steering Arm Set-Up for Installation.

END OF TASK

FOLLOW-ON MAINTENANCE

1. Install front brake chamber (WP 0514).
2. Install left front tire (WP 0530).
3. Remove wheel chocks (TM 9-2355-106-10).
4. Turn MAIN POWER switch on (TM 9-2355-106-10).
5. Start engine (TM 9-2355-106-10).
6. Turn steering wheel from lock to lock (TM 9-2355-106-10).
7. Test-drive vehicle to verify proper steering operation (TM 9-2355-106-10).
8. Set parking brake (TM 9-2355-106-10).
9. Set transmission in NEUTRAL (N) (TM 9-2355-106-10).
10. Turn engine off (TM 9-2355-106-10).
11. Turn MAIN POWER switch off (TM 9-2355-106-10).

END OF TASK

END OF WORK PACKAGE

FIELD MAINTENANCE

STEERING KNUCKLE AND KING PIN REMOVAL AND INSTALLATION

INITIAL SETUP:

Tools and Special Tools
General Mechanic's Tool Kit (GMTK) (WP 0795, Item 37)
Scale, dial indicating (WP 0795, Item 85)
Dial indicator set (WP 0795, Item 27)
Grease gun (WP 0795, Item 41)
Puller set, mechanical (WP 0795, Item 78)
Wrench, torque, 90-600 lb-ft, 3/4-inch drive (WP 0795, Item 144)
Socket, standard, impact, 3/4-inch drive, 6 pt, 1-5/16 inch (WP 0795, Item 112)
Jack, hydraulic, bottle, 20-ton capacity (WP 0795, Item 59)
Jack, floor, 20-ton (WP 0795, Item 88)

Materials/Parts
Rags (WP 0794, Item 39)
Goggles, industrial (WP 0794, Item 20)
Gloves (WP 0794, Item 18)
Brake cleaner (WP 0794, Item 9)
Sealing compound (WP 0794, Item 45)
Grease (WP 0794, Item 21)
Wire (WP 0794, Item 57)
Seal, oil (WP 0796, Item 158)
Thrust bearing, king pin (WP 0796, Item 48)
Shim kit, upper knuckle cap (WP 0796, Item 13)

References
TM 9-2355-106-10
TM 9-2355-106-23P
WP 0786
WP 0782

Equipment Condition
Parking brake set (TM 9-2355-106-10)
Transmission set in NEUTRAL (N) (TM 9-2355-106-10)
Engine off (TM 9-2355-106-10)
MAIN POWER switch off (TM 9-2355-106-10)
Wheels chocked (TM 9-2355-106-10)
Brake chamber removed (WP 0514)
Front brake spider and spindle assembly removed (WP 0489)
Steering drag link removed (required for left side steering knuckle removal only) (WP 0536)
Tie rod removed (WP 0531)

WARNING

Do not disconnect any air line or fitting until system pressure has been relieved. Hoses may whip and injure personnel, and air under pressure can penetrate skin. Failure to comply may result in serious injury or death to personnel.

Do not use heat on components to facilitate removal of steering arms. Heat may weaken other connecting parts. Apply lubricating spray and let soak for a few minutes, then use breaker bar to break loose. Use correct socket wrench to avoid damaging boltheads. Failure to comply may result in damage to equipment and serious injury or death to personnel.

NOTE

There are left side and right side steering knuckle and king pin assemblies. This procedure covers left side; right side similar.

STEERING KNUCKLE AND KING PIN REMOVAL AND INSTALLATION - (CONTINUED)

REMOVAL

1. Remove four lower steering knuckle cap bolts (Figure 1, Item 4), washers (Figure 1, Item 3), lower steering knuckle cap (Figure 1, Item 2), and thrust bearing (not shown) from steering knuckle (Figure 1, Item 1).

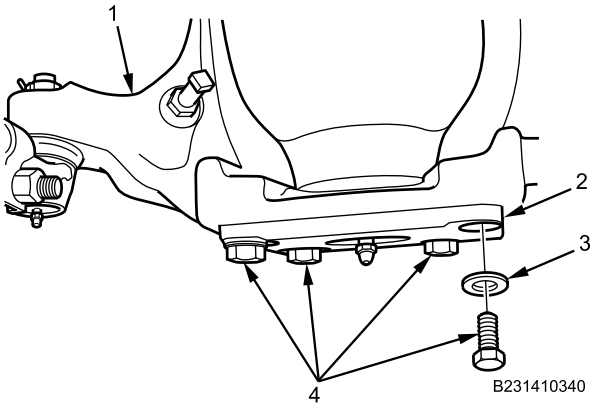

Figure 1. Steering Knuckle.

2. Support steering knuckle (Figure 2, Item 1) with floor jack (Figure 2, Item 2).

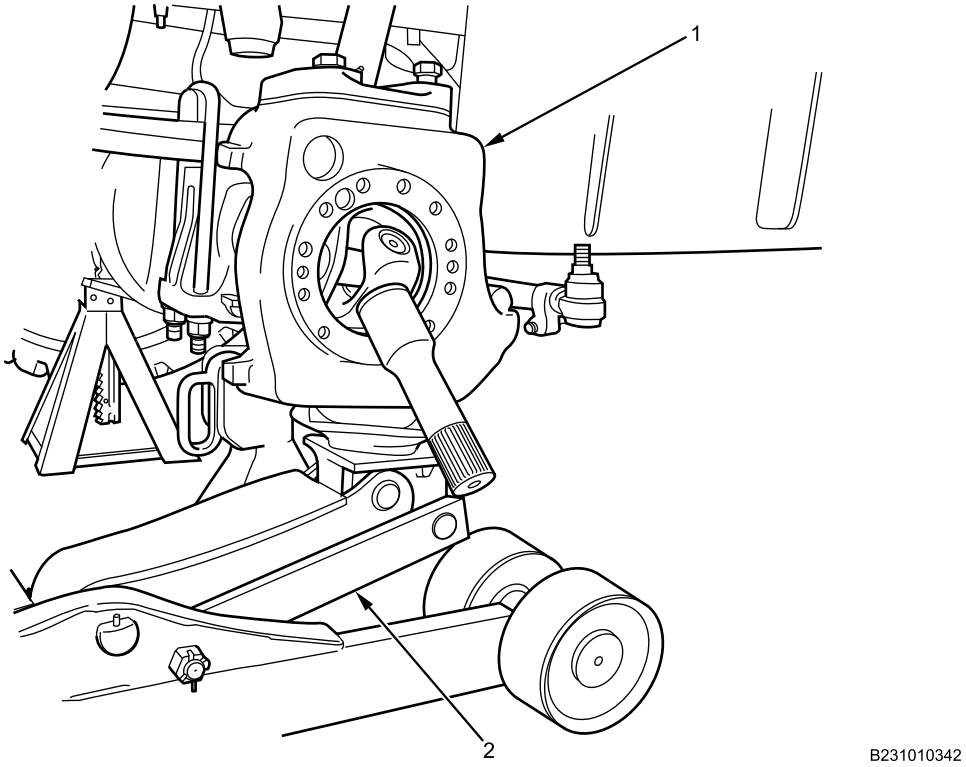

Figure 2. Steering Knuckle Supported by Floor Jack.

STEERING KNUCKLE AND KING PIN REMOVAL AND INSTALLATION - (CONTINUED)

3. Remove five bolts (Figure 3, Item 1), washers (Figure 3, Item 2), brake chamber mounting bracket (Figure 3, Item 7), steering arm (or upper king pin cap for right side) (Figure 3, Item 3), oil seal (Figure 3, Item 4), and shim (Figure 3, Item 5) from steering knuckle (Figure 3, Item 6). Discard oil seal.

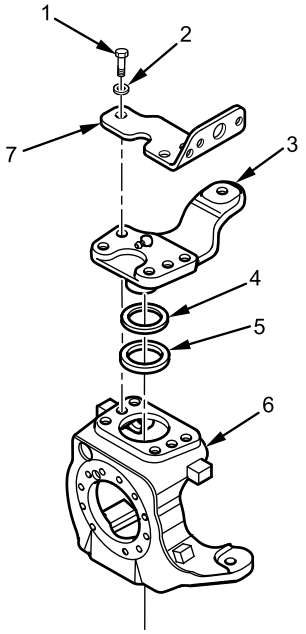

B231403776

Figure 3. Steering Knuckle.

4. Remove steering knuckle (Figure 3, Item 6) from axle assembly.

END OF TASK

STEERING KNUCKLE AND KING PIN REMOVAL AND INSTALLATION - (CONTINUED)

CLEANING

WARNING

Adhesives, solvents, and sealing compounds can burn easily, can give off harmful vapors, and are harmful to skin and clothing. Wear goggles and protective clothing. Keep away from open flame and use in well-ventilated area. If adhesive, solvent, or sealing compound get on skin or clothing, wash immediately with soap and water. Failure to comply may result in injury or death to personnel.

1. Using rags and brake cleaner, clean all dirt off thrust bearing (Figure 4, Item 11), lower steering knuckle cap (Figure 4, Item 10), steering arm (or upper king pin cap for right side) (Figure 4, Item 3), brake chamber mounting bracket (Figure 4, Item 12), steering knuckle (Figure 4, Item 6), shim (Figure 4, Item 5), grease fitting (Figure 4, Item 9), bolts (Figure 4, Item 1 and 8), and washers (Figure 4, Item 2 and 7).

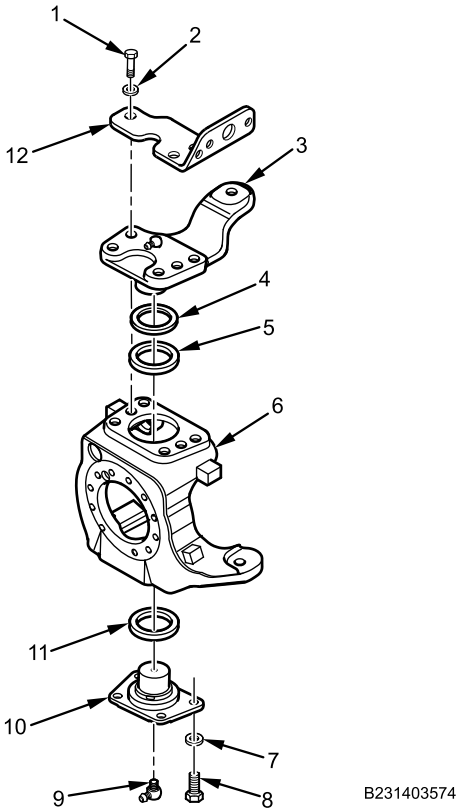

Figure 4. Cleaning Steering Knuckle.

2. Dry all parts with rags.

END OF TASK

STEERING KNUCKLE AND KING PIN REMOVAL AND INSTALLATION - (CONTINUED)

INSPECTION

1. Visually inspect upper and lower steering knuckle cap bearing surfaces (Figure 5, Item 3), and upper and lower king pins (Figure 5, Item 2) for scoring, galling, or displaced metal. Surfaces should be smooth and free from all defects. Replace as necessary.

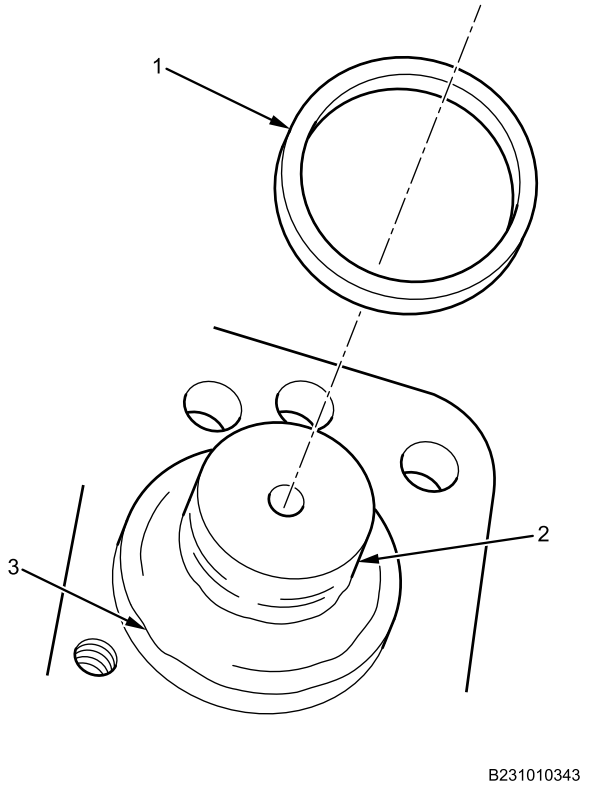

Figure 5. Inspecting Upper and Lower Steering Knuckle Caps.

2. Visually inspect thrust bearing (lower steering knuckle cap only) (Figure 5, Item 1) for scoring, galling, or displaced metal. Surfaces should be smooth and free from all defects. Replace as necessary.

STEERING KNUCKLE AND KING PIN REMOVAL AND INSTALLATION - (CONTINUED)

3. Visually inspect upper king pin bushing (Figure 6, Item 1) and lower king pin bushing (Figure 6, Item 2) for scoring, galling, or displaced metal. Bushings should not show uneven wear. Surface of bushing should not have smooth, worn surface. If bushing is worn and axle housing ends are damaged from king pin wearing into axle, replace axle assembly. If wear is indicated replace king pin bushings. Refer to Upper and Lower King Pin Bushing Removal and Installation (WP 0475).

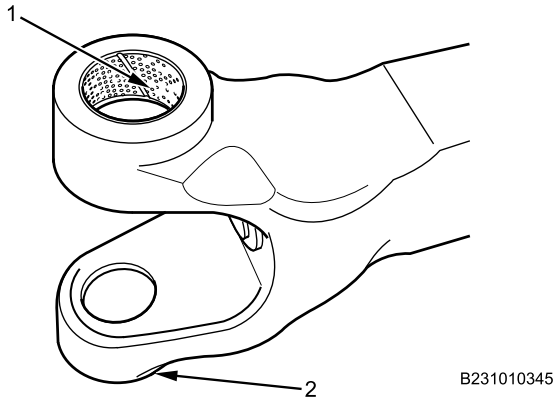

Figure 6. Inspecting King Pin Bushings.

4. Visually inspect upper (Figure 7, Item 1) and lower (Figure 7, Item 2) bearing surface of steering knuckle for scoring, galling, or displaced metal. Replace as necessary.

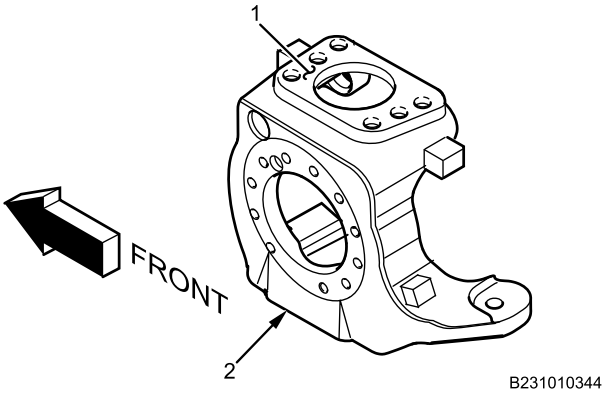

Figure 7. Inspecting Upper and Lower Bearing Surfaces of Steering Knuckle.

END OF TASK

STEERING KNUCKLE AND KING PIN REMOVAL AND INSTALLATION - (CONTINUED)

INSTALLATION

1. Position steering knuckle (Figure 8, Item 1) onto axle housing with floor jack (Figure 8, Item 2).

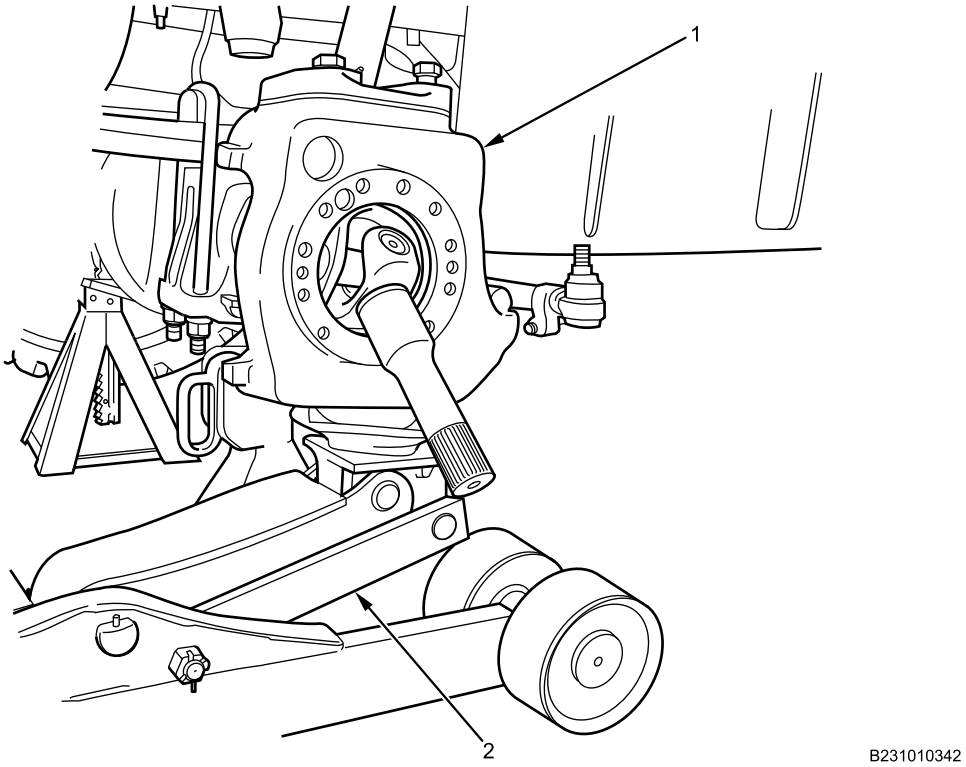

Figure 8. Steering Knuckle Supported by Floor Jack.

STEERING KNUCKLE AND KING PIN REMOVAL AND INSTALLATION - (CONTINUED)

NOTE

Use same thickness shim pack as removed with steering arm. Shim pack must contain minimum of three shims.

2. Install shims (Figure 9, Item 5) and new oil seal (Figure 9, Item 4) against base of steering arm (Figure 9, Item 3).

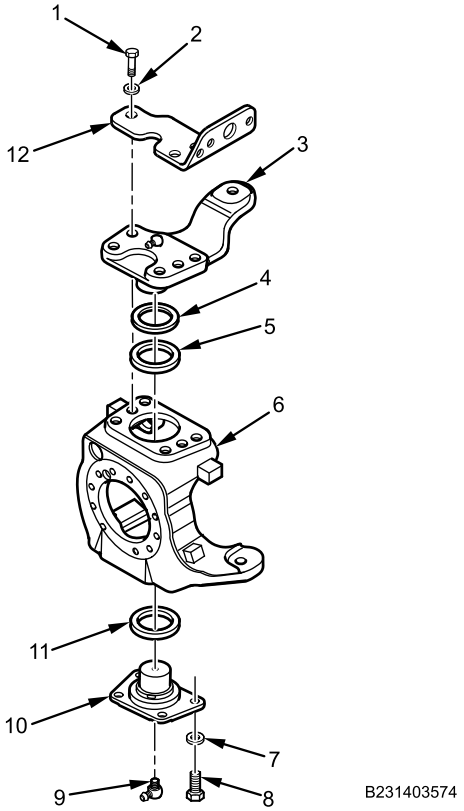

Figure 9. Steering Knuckle.

STEERING KNUCKLE AND KING PIN REMOVAL AND INSTALLATION - (CONTINUED)

3. Install steering arm (or upper king pin cap for right side) (Figure 9, Item 3) and brake chamber bracket (Figure 9, Item 12) on steering knuckle (Figure 9, Item 6) with five bolts (Figure 9, Item 1) and washers (Figure 9, Item 2). Do not torque bolts at this time.
4. Pack thrust bearing (Figure 9, Item 11) with grease and install bearing on lower steering knuckle cap (Figure 9, Item 10).
5. Remove floor jack.

WARNING

Thread sealing compound is harmful to skin and eyes. If thread sealing compound contacts eyes, rinse thoroughly and contact physician if irritation persists. If skin is contacted, wash thoroughly with soap and water. Failure to comply may result in serious injury to personnel.

6. Apply thread sealing compound to threads on four lower steering knuckle cap bolts (Figure 9, Item 8).
7. Install lower steering knuckle cap (Figure 9, Item 10) onto steering knuckle (Figure 9, Item 6) with four bolts (Figure 9, Item 8) and washers (Figure 9, Item 7). Torque bolts to 310-400 lb-ft (420-542 N•m).
8. Torque steering arm bolts (Figure 9, Item 1) to 500-600 lb-ft (678-881 N•m).
9. Remove lower steering knuckle cap grease fitting (Figure 9, Item 9).

STEERING KNUCKLE AND KING PIN REMOVAL AND INSTALLATION - (CONTINUED)

10. Secure dial indicator (Figure 10, Item 1) between axle housing (Figure 10, Item 5) and steering arm boss (Figure 10, Item 2) with pintle on dial indicator touching top of steering knuckle boss.

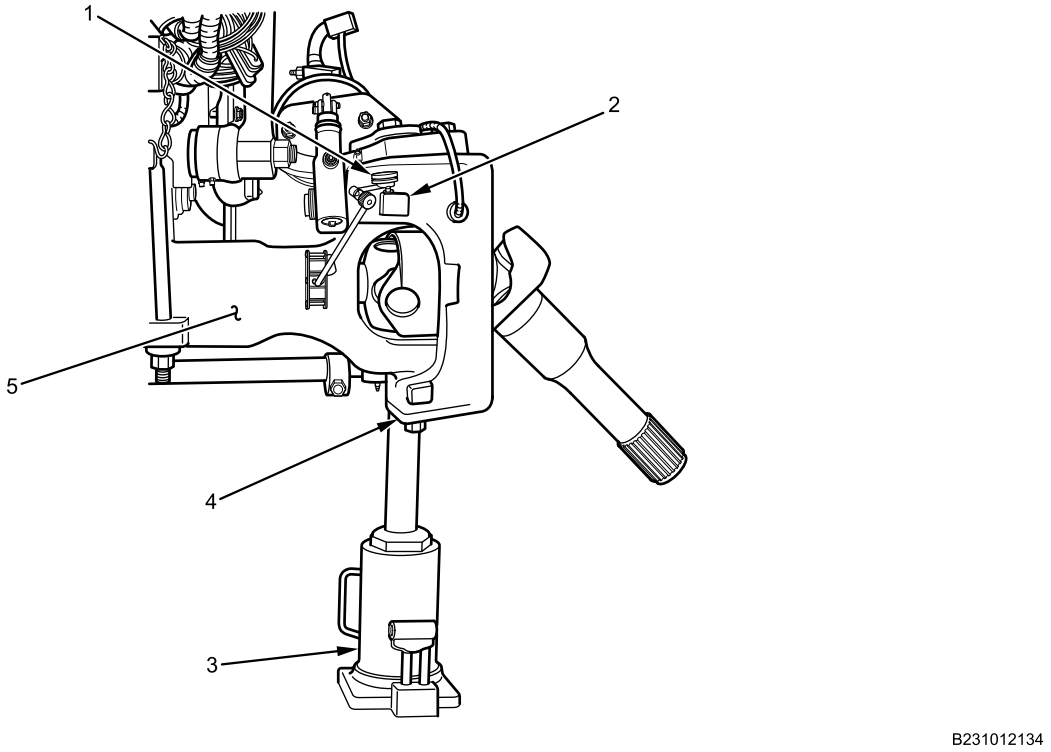

Figure 10. Steering Knuckle End Play.

11. Apply pressure on lower steering knuckle cap (Figure 10, Item 4) with hydraulic jack (Figure 10, Item 3) until axle begins to lift off jack stands. Set dial indicator (Figure 10, Item 1) to zero.

NOTE

If end play is too tight remove shims; if end play is too loose add shims.

Shims are added or removed from under steering arm on left side and king pin cap on right side.

If necessary to add or remove shims, only removal of upper steering arm or upper king pin cap is necessary. Refer to step 3 of Removal.

12. Release jack pressure and read end play on dial indicator (Figure 10, Item 1). Correct end play is 0.005-0.015 inch (0.127-0.381 mm). Remove or add shims to correct end play.
13. Install grease fitting (Figure 11, Item 2) on lower steering knuckle cap (Figure 11, Item 1).

STEERING KNUCKLE AND KING PIN REMOVAL AND INSTALLATION - (CONTINUED)

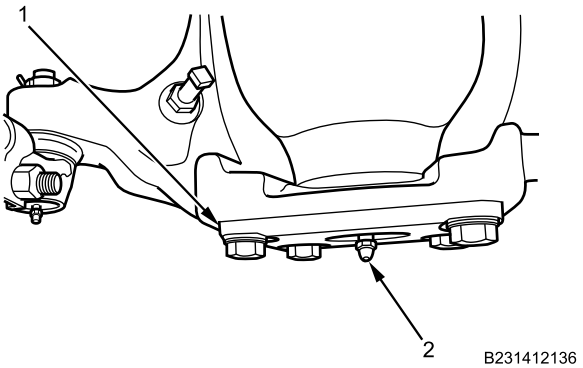

Figure 11. Lower Steering Knuckle Cap and Grease Fitting. Lower Shown; Upper Similar.

14. Apply grease to upper and lower grease fittings (Figure 11, Item 2) with grease gun.
15. Secure wire (Figure 12, Item 1) to tie rod arm of steering knuckle (Figure 12, Item 2). Attach dial scale (Figure 12, Item 3) to wire.

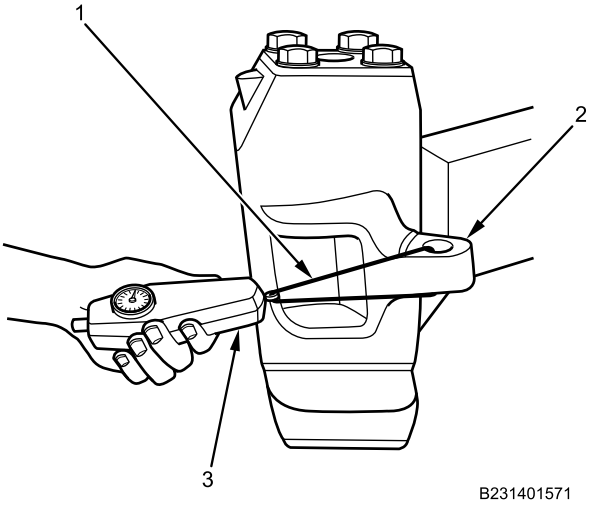

Figure 12. Steering Knuckle Bearing Preload.

NOTE

Knuckle bearing preload is measured while knuckle is in motion, not initial force required to move steering knuckle.

16. Pull dial scale (Figure 12, Item 3) while monitoring dial. Correct preload is 8-25 lb (3.6-11.3 kg). If knuckle bearing preload is not correct, repeat Removal, Inspection, and Installation procedures, and check for proper assembly.

END OF TASK

STEERING KNUCKLE AND KING PIN REMOVAL AND INSTALLATION - (CONTINUED)

FOLLOW-ON MAINTENANCE

1. Install tie rod (WP 0531).
2. Install steering drag link (required for left side steering knuckle removal only) (WP 0538).
3. Install brake chamber (WP 0514).
4. Install front brake spider and spindle assembly (WP 0489).
5. Remove wheel chocks (TM 9-2355-106-10).
6. Turn MAIN POWER switch on (TM 9-2355-106-10).
7. Start engine (TM 9-2355-106-10).
8. Turn steering wheel from lock to lock.
9. Test drive vehicle to verify proper steering operation (TM 9-2355-106-10).
10. Set parking brake (TM-9-2355-106-10).
11. Set transmission in NEUTRAL (N) (TM 9-2355-106-10).
12. Turn engine off (TM 9-2355-106-10).
13. Turn MAIN POWER switch off (TM 9-2355-106-10).

END OF TASK

END OF WORK PACKAGE

FIELD MAINTENANCE

REAR AXLE ASSEMBLY REMOVAL AND INSTALLATION

INITIAL SETUP:

Tools and Special Tools
General Mechanic's Tool Kit (GMTK) (WP 0795, Item 37)
Belly Armor Removal/Installer Kit (WP 0795, Item 16)
Wrench, torque, 90-600 lb-ft, 3/4-inch drive (WP 0795, Item 144)
Jackstand (10-ton), 19-28.5-inches (WP 0795, Item 62)
Jackstand, 10-ton, 30-52-inches (WP 0795, Item 63)
Jack, floor, 20-ton (WP 0795, Item 52)

Materials/Parts
Grease (WP 0794, Item 27)
Sealing compound (WP 0794, Item 44)
Locknut - (10) (WP 0796, Item 44)
Lockwasher - (8) (WP 0796, Item 117)
Cable lock strap - (12) (WP 0796, Item 124)

Personnel Required
Maintainer - (2)

References
TM 9-2355-106-10
TM 9-2355-106-23P
WP 0782

Equipment Condition
Parking brake set (TM 9-2355-106-10)
Transmission set in NEUTRAL (N) (TM 9-2355-106-10)
Engine off (TM 9-2355-106-10)
MAIN POWER switch off (TM 9-2355-106-10)
Wheels chocked (TM 9-2355-106-10)
Air tanks drained (TM 9-2355-106-10)
Rear brakes caged (TM 9-2355-106-10)
Prop shaft removed (WP 0468)
Muffler and shield removed (WP 0276)
S-camshaft tube support bracket removed (WP 0498)

WARNING

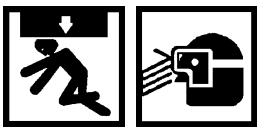

Before lifting vehicle off ground, make sure it is parked on level surface. Set parking brake and chock wheels. Use floor jack to lift vehicle. Jackstands and floor jack must be used on a stable surface capable of supporting the combined weight of the vehicle being lifted and the lifting equipment. Do not use jack alone to support vehicle. Never work under or near a vehicle supported only by jack or lifting device. Use rated jackstands under frame rails to properly support vehicle. Do not support vehicle under front and rear axles. Use additional jackstands as necessary to support vehicle components during removal and installation procedures. Failure to comply may result in damage to equipment and serious injury or death to personnel.

Do not operate vehicle with air pressure system loss. Vehicle has reduced or no braking capability and may not stop. Failure to comply may result in damage to equipment and serious injury or death to personnel.

Let air pressure build in both tanks to 100 psi (689 kPa) before releasing the parking brake. Low air pressure may affect vehicle braking capability. Failure to comply may result in injury or death to personnel.

REAR AXLE ASSEMBLY REMOVAL AND INSTALLATION - (CONTINUED)

NOTE

Perform all steps for left and right sides unless otherwise noted. Left side shown; right side similar.

REMOVAL

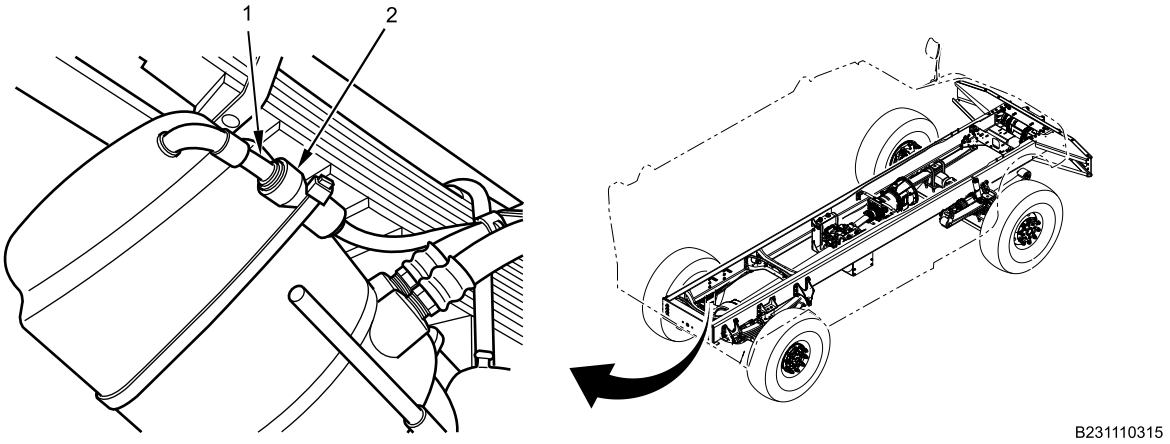

Figure 1. Air Chamber.

1. Disconnect air chamber nylon hose (Figure 1, Item 1) from air vent connector (Figure 1, Item 2).

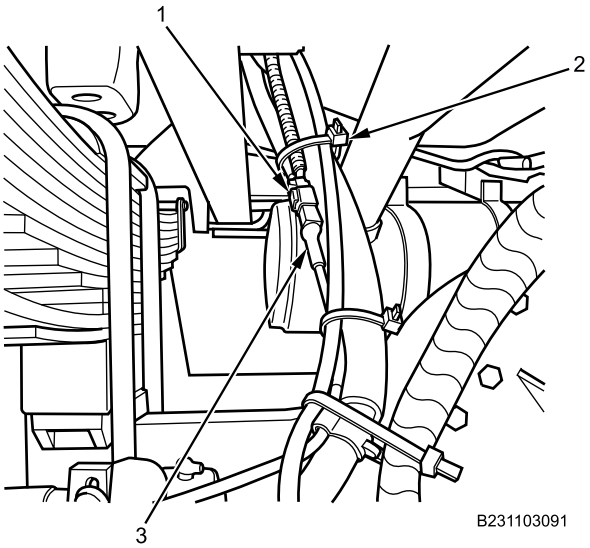

Figure 2. Electrical Connector.

2. Remove and discard cable lock straps (Figure 2, Item 2) as needed.
3. Disconnect electrical connector (Figure 2, Item 3) from wiring harness (Figure 2, Item 1).

REAR AXLE ASSEMBLY REMOVAL AND INSTALLATION - (CONTINUED)

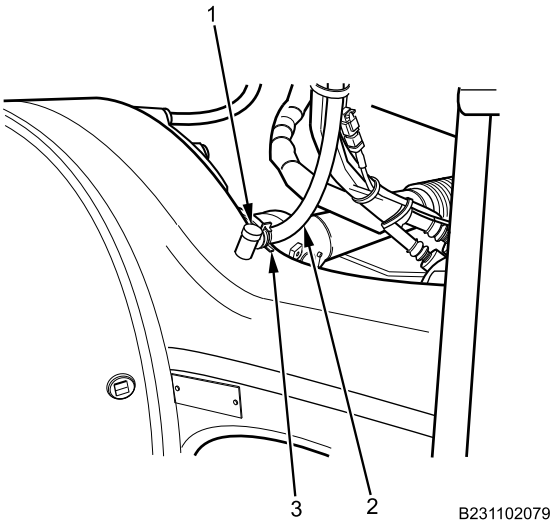

Figure 3. Air Vent Hose.

NOTE

Perform following step on right side only.

4. Remove spring clip (Figure 3, Item 3) and vent hose (Figure 3, Item 2) from vent (Figure 3, Item 1).

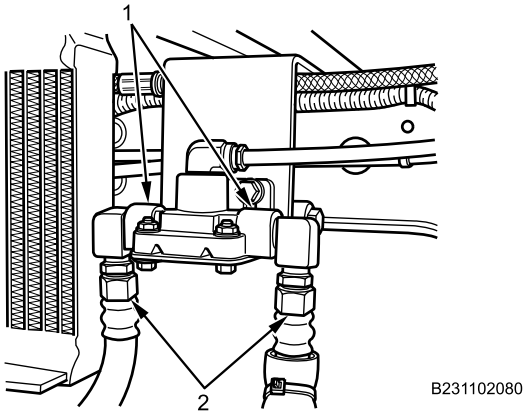

Figure 4. Inner Air Line Hoses.

NOTE

Perform following step on right side only.

5. Remove two inner air line hoses (Figure 4, Item 2) from air line connector (Figure 4, Item 1).

REAR AXLE ASSEMBLY REMOVAL AND INSTALLATION - (CONTINUED)

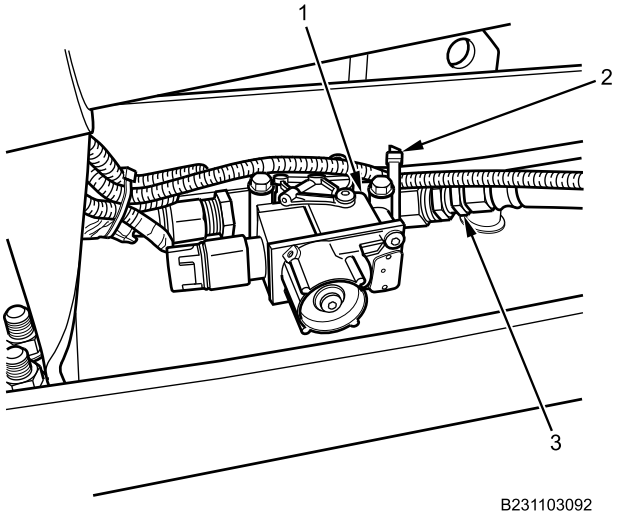

Figure 5. Modulator Valve.

6. Remove and discard cable lock straps (Figure 5, Item 2) as needed.
7. Remove outer air line hose (Figure 5, Item 3) from modulator valve (Figure 5, Item 1).

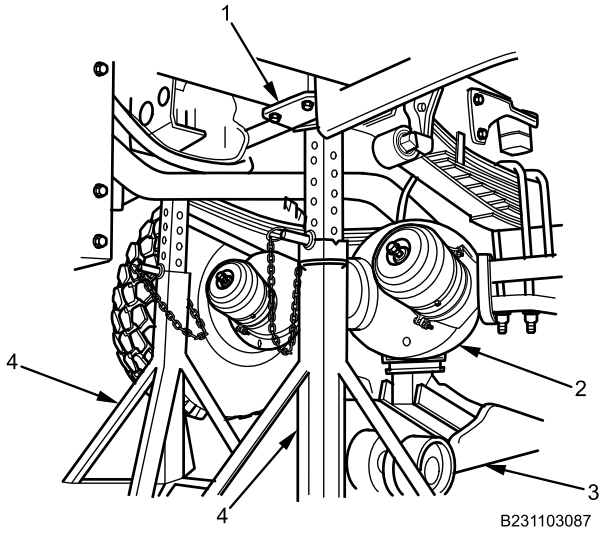

Figure 6. 20-Ton Floor Jack.

NOTE

Height for vehicle support stands is 41-42 inches.

8. Position 20-ton floor jack (Figure 6, Item 3) squarely under rear axle assembly (Figure 6, Item 2).
9. Using 20-ton floor jack (Figure 6, Item 3), lift vehicle from rear axle assembly (Figure 6, Item 2), and place two 10-ton vehicle support stands (Figure 6, Item 4) under frame rails (Figure 6, Item 1) in front of rear axle assembly.

REAR AXLE ASSEMBLY REMOVAL AND INSTALLATION - (CONTINUED)

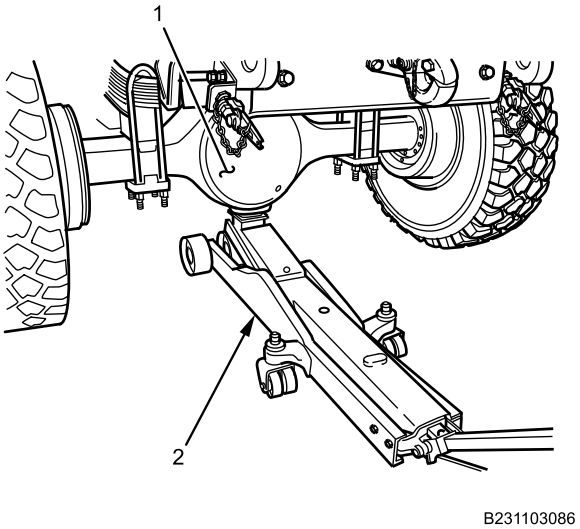

Figure 7. 20-Ton Floor Jack.

NOTE

Allow rear axle assembly to relax from rear springs before installing 10-ton jackstands.

10. Using 20-ton floor jack (Figure 7, Item 2), slowly lower rear axle assembly (Figure 7, Item 1) until rear axle hangs from rear springs.

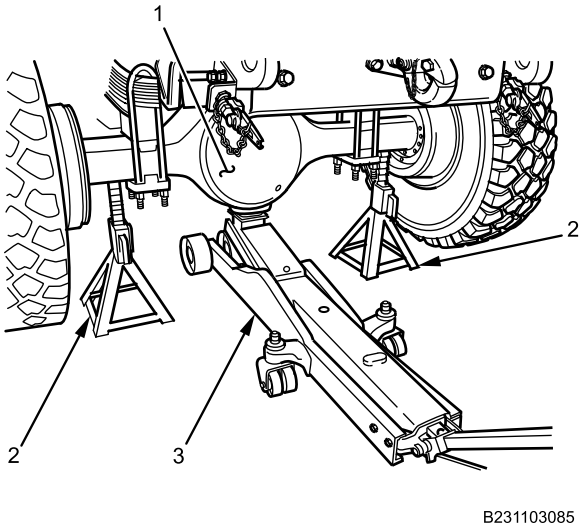

Figure 8. 10-Ton Jackstands.

11. Using 20-ton floor jack (Figure 8, Item 3), lift rear axle assembly (Figure 8, Item 1) 1-2 inches, if necessary, and place two 10-ton jackstands (Figure 8, Item 2) under rear axle assembly.
12. Using 20-ton floor jack (Figure 8, Item 3), lower rear axle assembly (Figure 8, Item 1) onto 10-ton jackstands (Figure 8, Item 2).

REAR AXLE ASSEMBLY REMOVAL AND INSTALLATION - (CONTINUED)

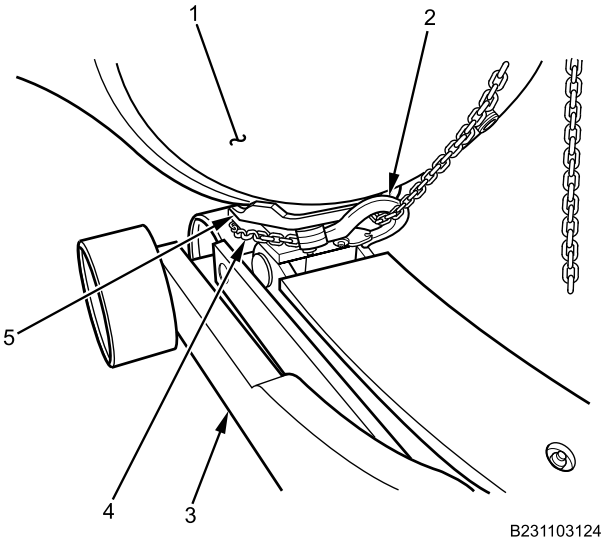

Figure 9. 20-Ton Floor Jack.

WARNING

Rear axle assembly must be secured to floor jack before removal from vehicle. Failure to comply may result in damage to equipment and serious injury or death to personnel.

13. Position 20-ton floor jack (Figure 9, Item 3) squarely under rear axle assembly (Figure 9, Item 1).
14. Using 20 ton-floor jack (Figure 9, Item 3), lift and support rear axle assembly (Figure 9, Item 1).
15. Position hoist lever chain (Figure 9, Item 4) around 20-ton floor jack lift plate (Figure 9, Item 5), and attach hook (Figure 9, Item 2) to chain, with opening facing downward.

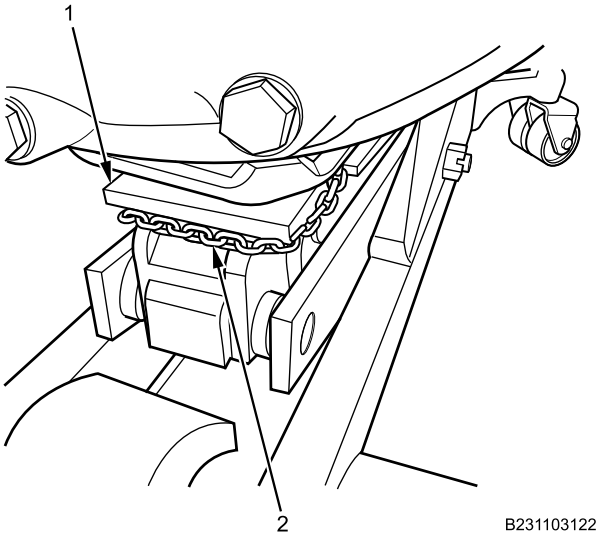

Figure 10. Hoist Lever Chain.

16. Position hoist lever chain (Figure 10, Item 2) under front section of floor jack lift plate bracket (Figure 10, Item 1).

REAR AXLE ASSEMBLY REMOVAL AND INSTALLATION - (CONTINUED)

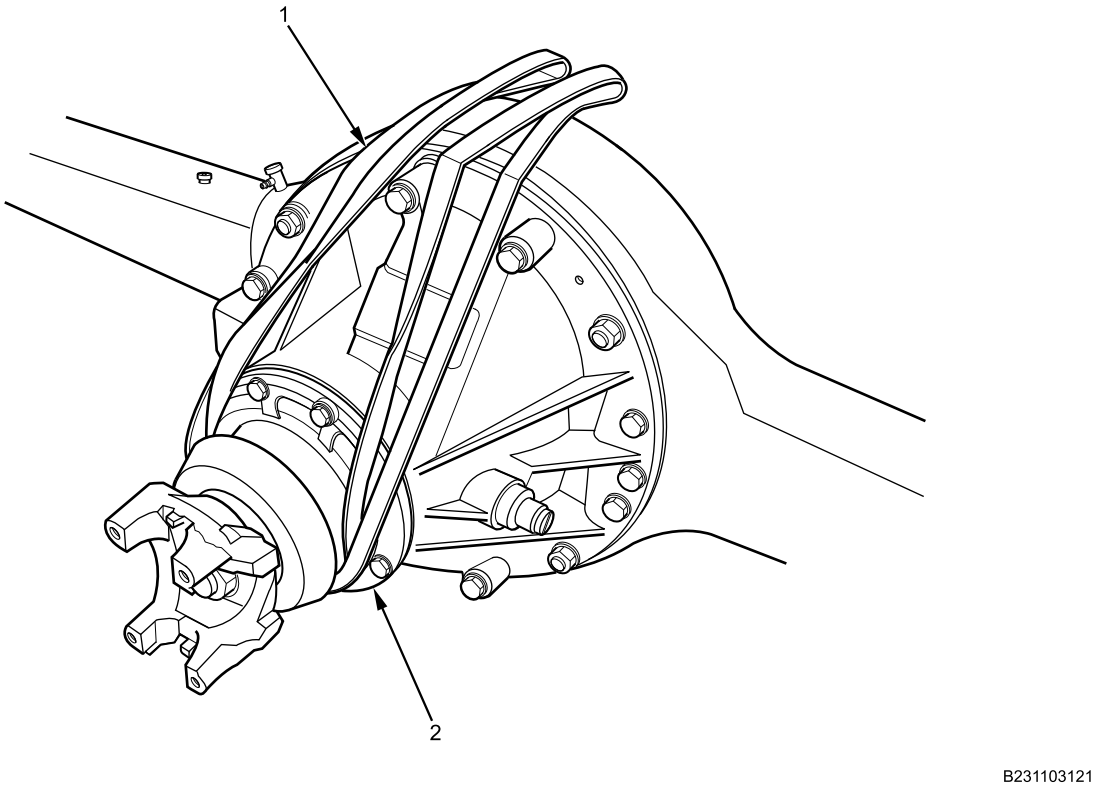

Figure 11. Strap.

17. Position strap (Figure 11, Item 1) around rear yoke (Figure 11, Item 2) as shown.

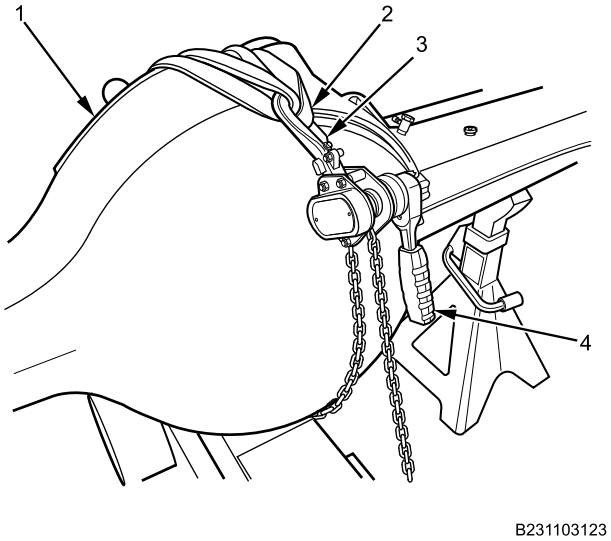

Figure 12. Hoist Lever.

18. Attach hoist lever hook (Figure 12, Item 3) to strap (Figure 12, Item 2).
19. Using hoist lever (Figure 12, Item 4), tighten strap (Figure 12, Item 2) and hoist lever chain to secure to rear axle assembly (Figure 12, Item 1) on 20-ton floor jack.

REAR AXLE ASSEMBLY REMOVAL AND INSTALLATION - (CONTINUED)

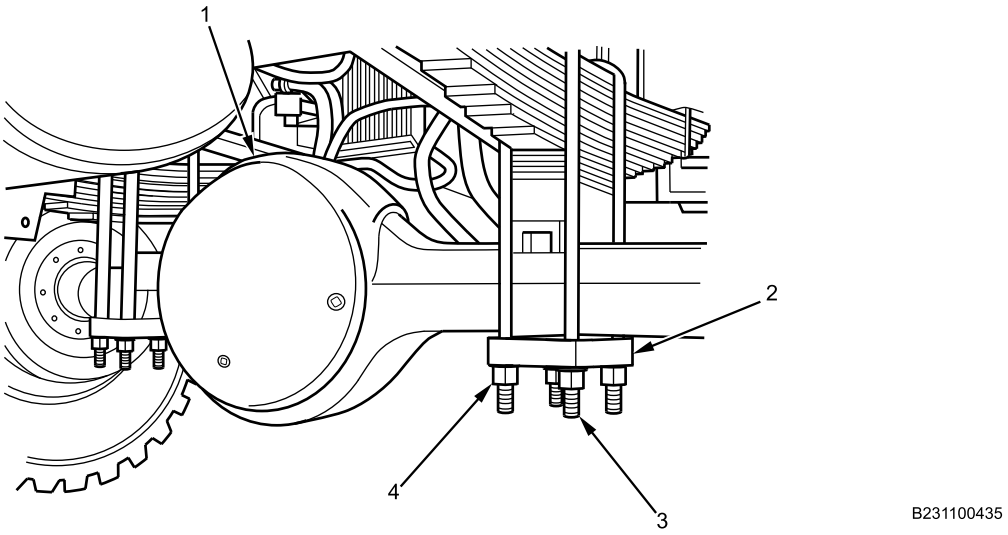

Figure 13. Rear Axle Assembly.

20. Remove four locknuts (Figure 13, Item 4), four washers, block (Figure 13, Item 2), and two spring U-bolts (Figure 13, Item 3) from rear axle assembly (Figure 13, Item 1). Discard locknuts and washers.

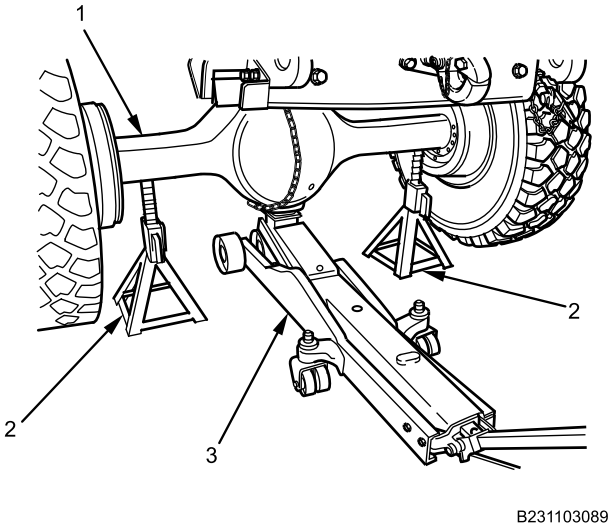

Figure 14. 10-Ton Jackstand Removal.

21. Using 20-ton floor jack (Figure 14, Item 3), lift rear axle assembly (Figure 14, Item 1) and remove both 10-ton jackstands (Figure 14, Item 2).

REAR AXLE ASSEMBLY REMOVAL AND INSTALLATION - (CONTINUED)

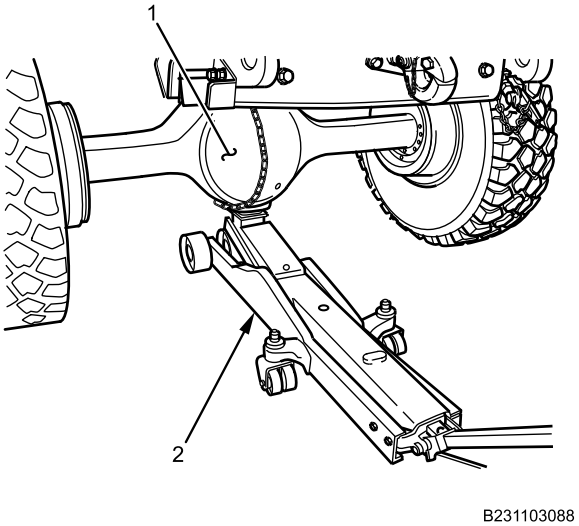

Figure 15. Rear Axle Assembly Removal.

NOTE

Maintain pressure on rear axle assembly with floor jack after rear tires are on ground.

22. Using 20-ton floor jack (Figure 15, Item 2), slowly lower rear axle assembly (Figure 15, Item 1) until rear tires are completely on ground.
23. Using two assistants, roll out rear axle assembly (Figure 15, Item 1) from vehicle on tires, maintaining pressure on rear axle assembly with 20-ton floor jack (Figure 15, Item 2).

REAR AXLE ASSEMBLY REMOVAL AND INSTALLATION - (CONTINUED)

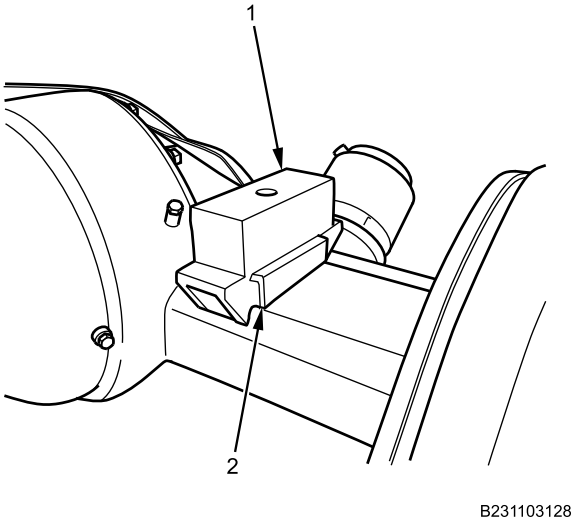

Figure 16. Block and Wedge.

24. Lift off block (Figure 16, Item 1) from wedge (Figure 16, Item 2) on rear axle assembly.

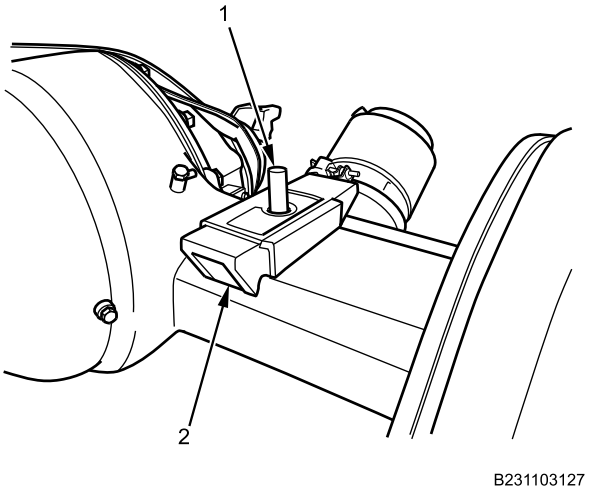

Figure 17. Wedge and Pin.

25. Remove wedge (Figure 17, Item 2) and pin (Figure 17, Item 1) from rear axle assembly.

END OF TASK

REAR AXLE ASSEMBLY REMOVAL AND INSTALLATION - (CONTINUED)

INSTALLATION

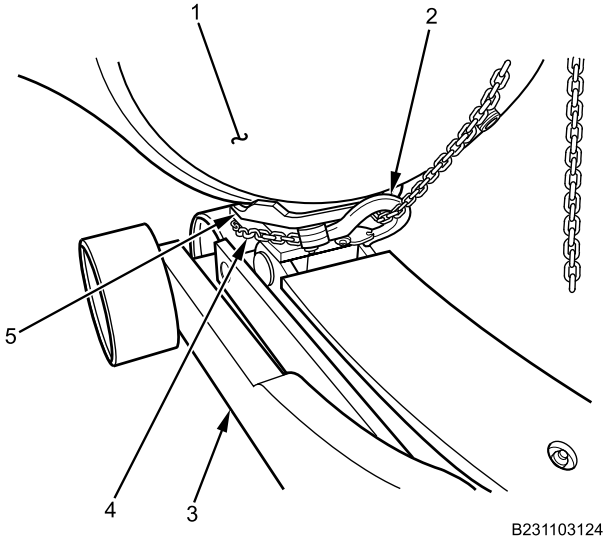

Figure 18. 20-Ton Floor Jack.

WARNING

Rear axle assembly must be secured to floor jack before installation on vehicle. Failure to comply may result in damage to equipment and serious injury or death to personnel.

1. Position 20-ton floor jack (Figure 18, Item 3) squarely under rear axle assembly (Figure 18, Item 1).
2. Using 20 ton-floor jack (Figure 18, Item 3), lift and support rear axle assembly(Figure 18, Item 1).
3. Position hoist lever chain (Figure 18, Item 4) around 20-ton floor jack lift plate (Figure 18, Item 5), and attach hook (Figure 18, Item 2) to chain, with opening facing downward.

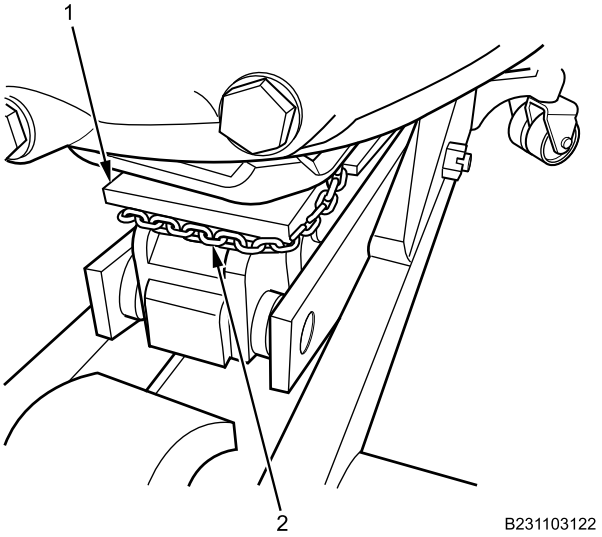

Figure 19. Hoist Lever Chain.

4. Position hoist lever chain (Figure 19, Item 2) under front section of floor jack lift plate bracket (Figure 19, Item 1).

REAR AXLE ASSEMBLY REMOVAL AND INSTALLATION - (CONTINUED)

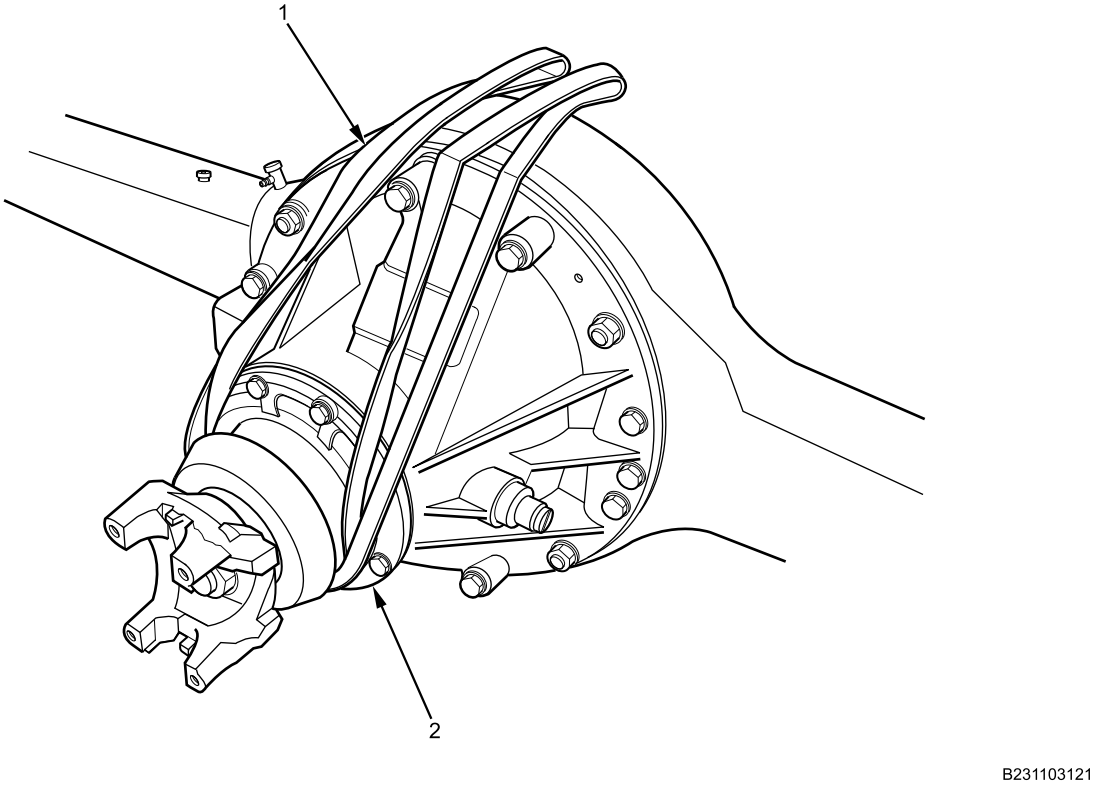

Figure 20. Strap.

5. Position strap (Figure 20, Item 1) around rear yoke (Figure 20, Item 2) as shown.

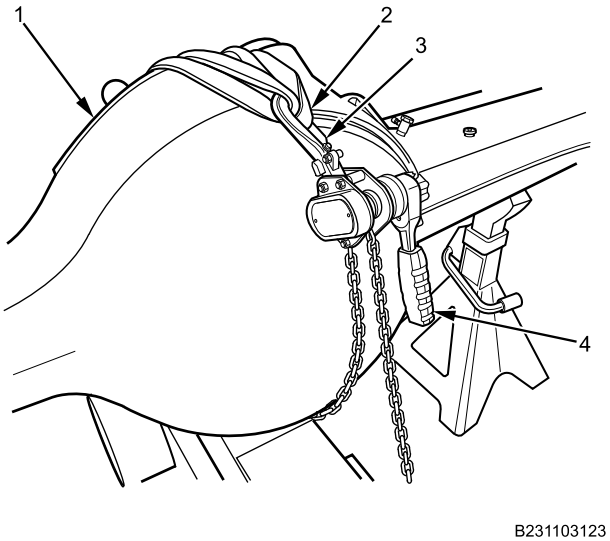

Figure 21. Hoist Lever.

6. Attach hoist lever hook (Figure 21, Item 3) to strap (Figure 21, Item 2).
7. Using hoist lever (Figure 21, Item 4), tighten strap (Figure 21, Item 2) and hoist lever chain to secure to rear axle assembly (Figure 21, Item 1) to 20-ton floor jack.

REAR AXLE ASSEMBLY REMOVAL AND INSTALLATION - (CONTINUED)

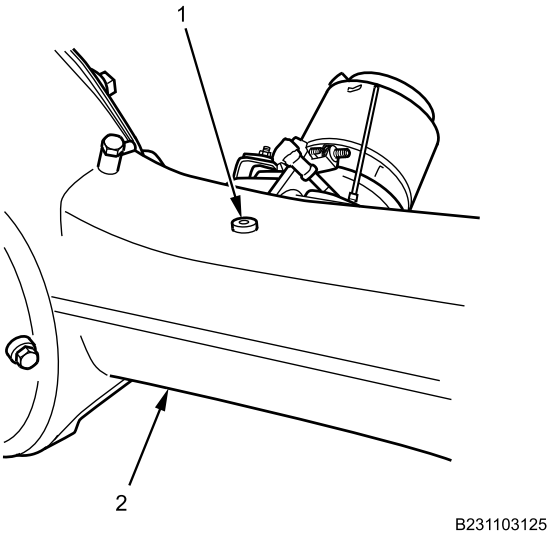

Figure 22. Guide Pin.

8. Locate wedge guide pin (Figure 22, Item 1) on rear axle assembly (Figure 22, Item 2).

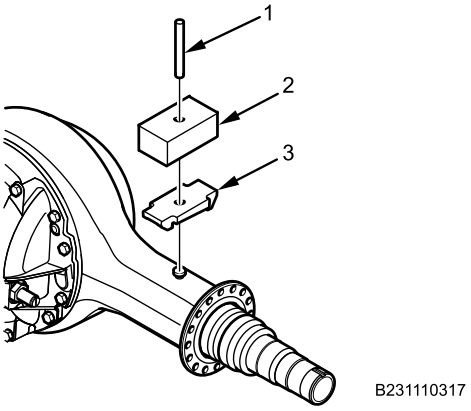

Figure 23. Wedge.

9. Install wedge (Figure 23, Item 3) on wedge guide pin.
10. Install pin (Figure 23, Item 1) on wedge (Figure 23, Item 3).
11. Install block (Figure 23, Item 2) on pin (Figure 23, Item 1) and wedge (Figure 23, Item 3).

REAR AXLE ASSEMBLY REMOVAL AND INSTALLATION - (CONTINUED)

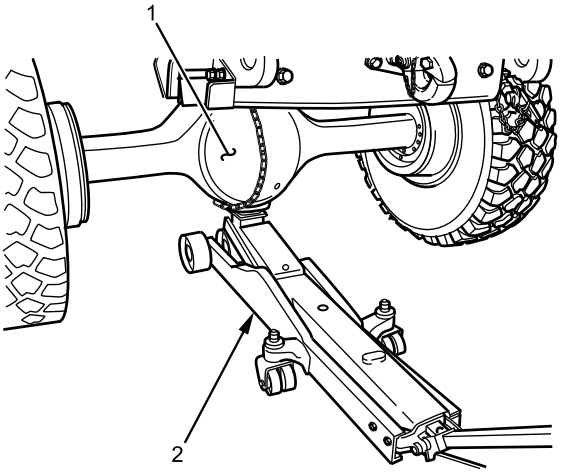

Figure 24. Rear Axle Assembly Installation.

12. Using two assistants, roll rear axle assembly (Figure 24, Item 1) under vehicle on tires, maintaining pressure on rear axle assembly with 20-ton floor jack (Figure 24, Item 2)

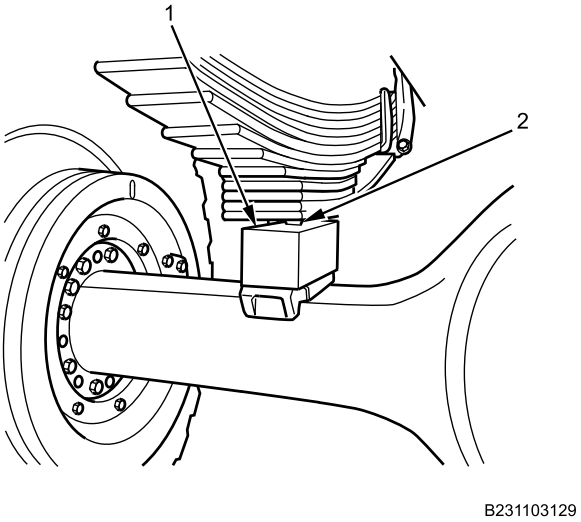

Figure 25. Spring Pin.

13. Using 20-ton floor jack, lift rear axle assembly into position, guiding spring pin (Figure 25, Item 2) on block (Figure 25, Item 1).

REAR AXLE ASSEMBLY REMOVAL AND INSTALLATION - (CONTINUED)

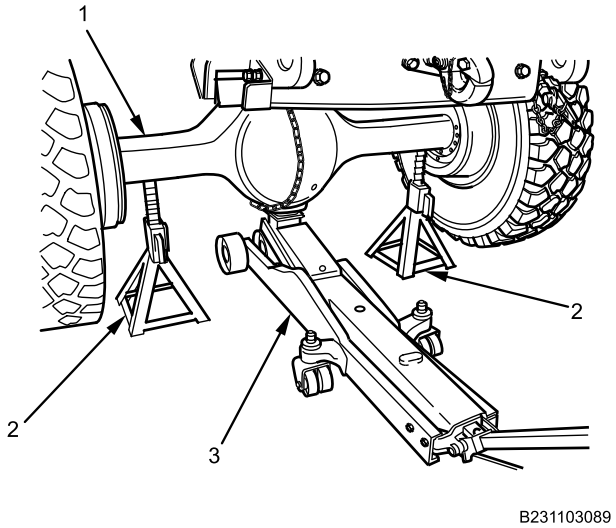

Figure 26. 10-Ton Jackstands.

14. Using 20-ton floor jack (Figure 26, Item 3), lift rear axle assembly (Figure 26, Item 1) 1-2 inches, if necessary, and place two 10-ton jackstands (Figure 26, Item 2) under rear axle assembly.
15. Using 20-ton floor jack (Figure 26, Item 3), lower rear axle assembly (Figure 26, Item 1) onto 10-ton jackstands (Figure 26, Item 2).

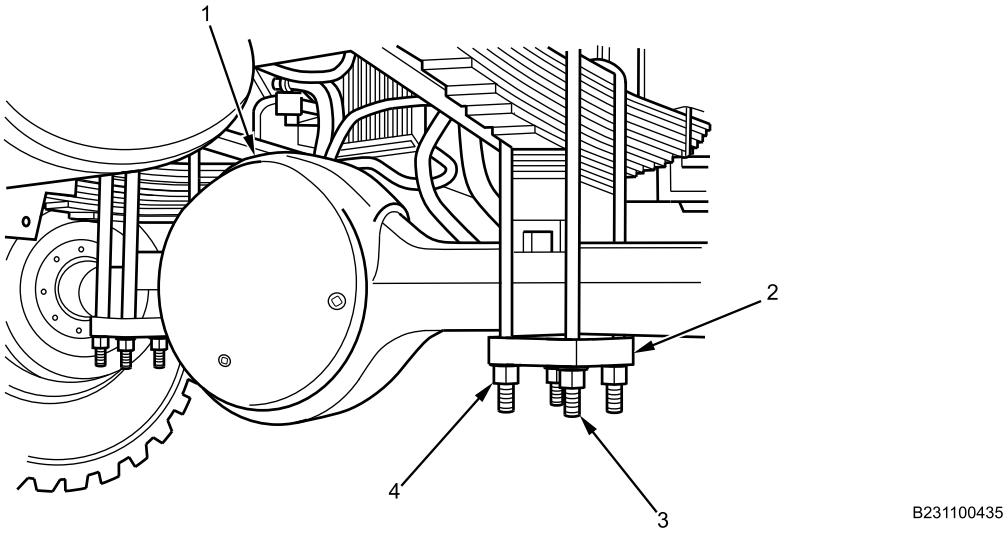

Figure 27. Rear Axle Assembly.

16. Install two U-spring bolts (Figure 27, Item 3) on rear axle assembly (Figure 27, Item 1) with block (Figure 27, Item 2), four new washers, and four new locknuts (Figure 27, Item 4). Using criss-cross pattern, torque locknuts to 15 lb-ft (20 N•m).
17. Using criss-cross pattern, retorque locknuts to 100 lb-ft (136 N•m).
18. Using criss-cross pattern, retorque locknuts to 200 lb-ft (271 N•m).
19. Using criss-cross pattern, retorque locknuts to 300 lb-ft (407 N•m).
20. Using criss-cross pattern, retorque locknuts to 370-400 lb-ft (502-542 N•m).

REAR AXLE ASSEMBLY REMOVAL AND INSTALLATION - (CONTINUED)

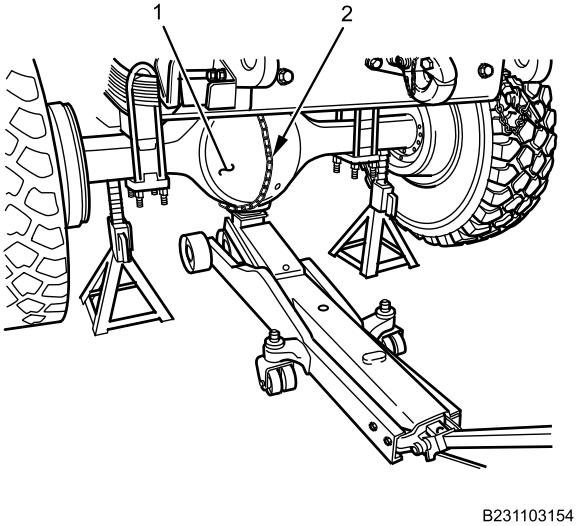

Figure 28. Hoist Lever.

21. Remove hoist lever, chain (Figure 28, Item 2), and strap from rear axle assembly (Figure 28, Item 1).

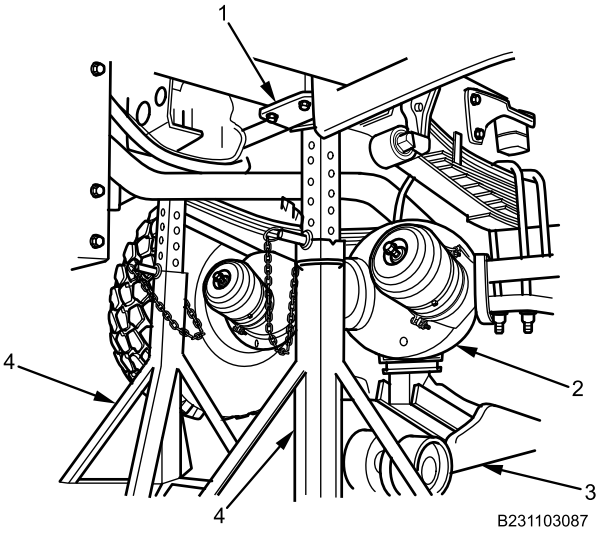

Figure 29. 10-Ton Vehicle Support Stand.

22. Using 20-ton floor jack (Figure 29, Item 3), lift vehicle from rear axle assembly (Figure 29, Item 2) until 10-ton vehicle support stands (Figure 29, Item 4) are not contacting frame rails (Figure 29, Item 1).
23. Remove 10-ton vehicle support stands (Figure 29, Item 4) from frame rails (Figure 29, Item 1).

REAR AXLE ASSEMBLY REMOVAL AND INSTALLATION - (CONTINUED)

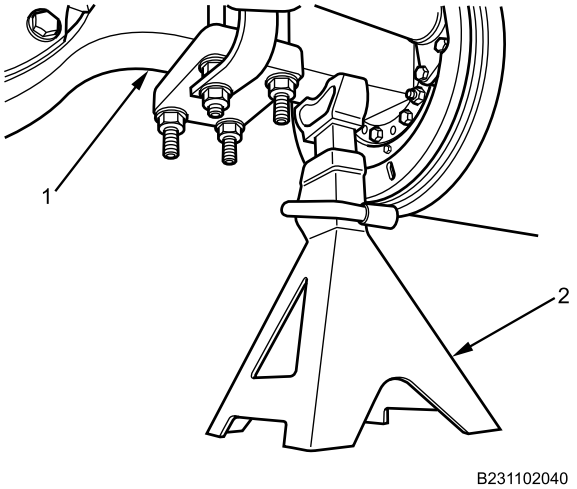

Figure 30. Jackstand.

24. Remove 10-ton jackstands (Figure 30, Item 2) from rear axle assembly (Figure 30, Item 1).

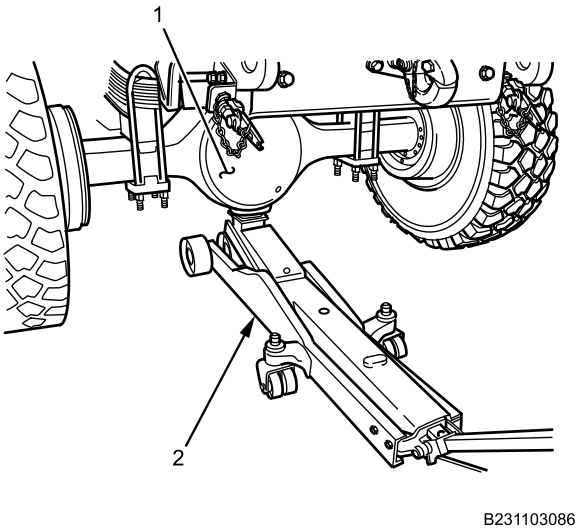

Figure 31. 20-Ton Floor Jack.

25. Using 20-ton floor jack (Figure 31, Item 2) slowly lower vehicle from rear axle assembly (Figure 31, Item 1) until rear tires are completely on ground.

REAR AXLE ASSEMBLY REMOVAL AND INSTALLATION - (CONTINUED)

WARNING

Thread sealing compound is harmful to skin and eyes. If thread sealing compound contacts eyes, rinse thoroughly and contact physician if irritation persists. If skin is contacted, wash thoroughly with soap and water. Failure to comply may result in serious injury to personnel.

CAUTION

Do not allow thread sealing compound into ABS modulator valve. Failure to comply may result in damage to equipment.

26. Apply thread sealing compound on outer air line hose threads.

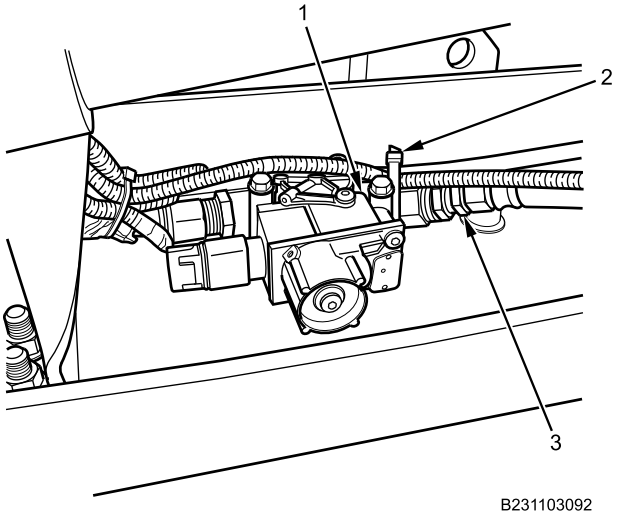

Figure 32. Modulator Valve.

27. Install outer air line hose (Figure 32, Item 3) into modulator valve (Figure 32, Item 1). Tighten securely.
28. Install new cable straps (Figure 32, Item 2) as needed.

REAR AXLE ASSEMBLY REMOVAL AND INSTALLATION - (CONTINUED)

WARNING

Thread sealing compound is harmful to skin and eyes. If thread sealing compound contacts eyes, rinse thoroughly and contact physician if irritation persists. If skin is contacted, wash thoroughly with soap and water. Failure to comply may result in serious injury to personnel.

CAUTION

Do not allow thread sealing compound into ABS modulator valve. Failure to comply may result in damage to equipment.

29. Apply thread sealing compound on inner air line hose threads.

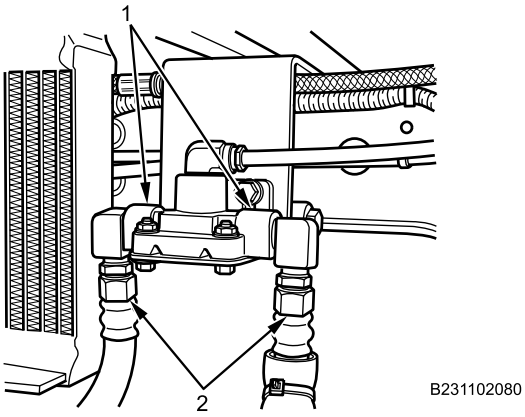

Figure 33. Inner Air Line Hoses.

30. Install two inner air line hoses (Figure 33, Item 2) into air line hose connector (Figure 33, Item 1). Tighten securely.

REAR AXLE ASSEMBLY REMOVAL AND INSTALLATION - (CONTINUED)

NOTE

Perform following step on right side only.

31. Install vent hose (Figure 34, Item 2) onto vent (Figure 34, Item 1) with spring clip (Figure 34, Item 3).

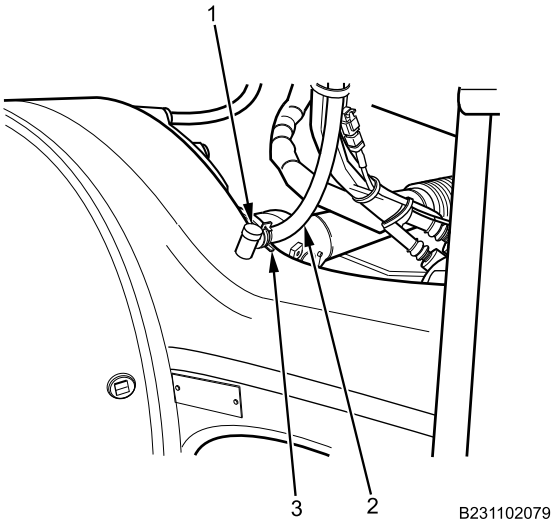

Figure 34. Air Vent Hose.

REAR AXLE ASSEMBLY REMOVAL AND INSTALLATION - (CONTINUED)

WARNING

Dielectric grease is harmful to skin and eyes. If grease contacts eyes, rinse thoroughly and contact physician if irritation persists. If skin is contacted, wash thoroughly with soap and water. Failure to comply may result in serious injury to personnel.

32. Apply dielectric grease in electrical connector (Figure 35, Item 3) and connect onto wiring harness (Figure 35, Item 1).

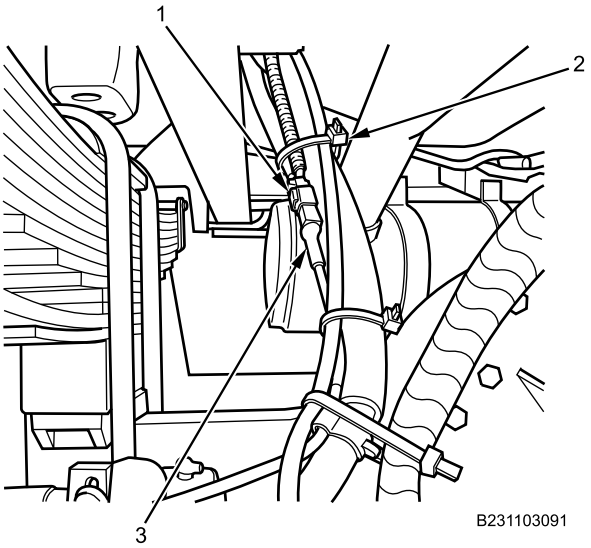

Figure 35. Electrical Connector.

33. Install new cable straps (Figure 35, Item 2) as needed.

REAR AXLE ASSEMBLY REMOVAL AND INSTALLATION - (CONTINUED)

34. Connect air chamber nylon hose (Figure 36, Item 1) into air vent connector (Figure 36, Item 2).

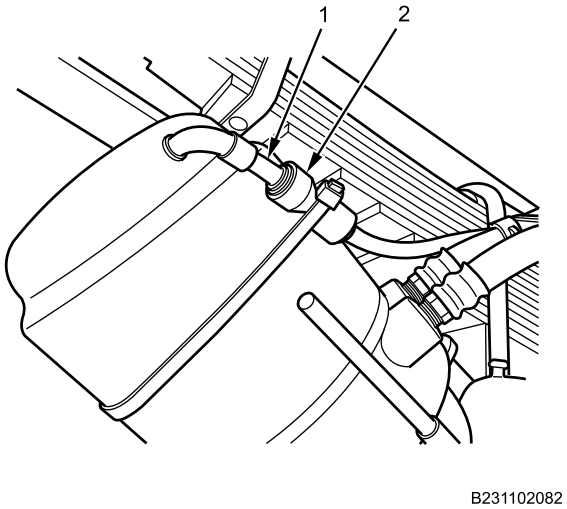

Figure 36. Air Chamber.

END OF TASK

FOLLOW-ON MAINTENANCE

1. Install S-camshaft tube support bracket (WP 0498).
2. Install muffler and shield (WP 0276).
3. Install prop shaft (WP 0468).
4. Check rear axle outer hub drain and fill as needed (WP 0481).
5. Check rear axle differential and fill as needed (WP 0479).
6. Uncage rear brakes (TM 9-2355-106-10).
7. Turn MAIN POWER switch on (TM 9-2355-106-10).
8. Start engine and allow air brake system pressure to build to normal range (TM 9-2355-106-10).
9. Check for air line leaks.
10. Remove wheel chocks (TM 9-2355-106-10).
11. Test-drive vehicle 1-2 miles (1.6-3.2 km) at 25 mph (40 kmh) or less and check for proper vehicle operation (TM 9-2355-106-10).
12. Set parking brake (TM 9-2355-106-10).
13. Set transmission in NEUTRAL (N) (TM 9-2355-106-10).
14. Turn engine off (TM 9-2355-106-10).
15. Turn MAIN POWER switch off (TM 9-2355-106-10).
16. Install wheel chocks (TM 9-2355-106-10).
17. Recheck gear oil level (TM 9-2355-106-10).
18. Remove wheel chocks (TM 9-2355-106-10).

END OF TASK

END OF WORK PACKAGE

FIELD MAINTENANCE

REAR AXLE DIFFERENTIAL DRAIN/FILL PROCEDURE

INITIAL SETUP:

Tools and Special Tools
General Mechanic's Tool Kit (GMTK) (WP 0795, Item 37)
Torque wrench, 3/8-inch drive (20-100 lb-ft) (WP 0795, Item 141)
Pan, drain, 5-gal. capacity (WP 0795, Item 75)

Materials/Parts
Gloves (WP 0794, Item 18)
Goggles, industrial (WP 0794, Item 20)
Rags (WP 0794, Item 39)
Lubricating oil (WP 0794, Item 29)

References
TM 9-2355-106-10
TM 9-2355-106-23P
WP 0782

Equipment Condition
Parking brake set (TM 9-2355-106-10)
Transmission set in NEUTRAL (N) (TM 9-2355-106-10)
Engine off (TM 9-2355-106-10)
MAIN POWER switch off (TM 9-2355-106-10)
Wheels chocked (TM 9-2355-106-10)

WARNING

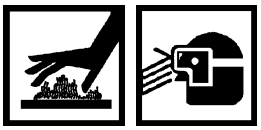

Use care when working with hot axle differential case and differential fluid. Wear goggles, work gloves, and long sleeves for protection. Avoid contact with hot differential oil or sump when draining oil. If oil temperature is above 220°F (104°C), allow to cool before draining from axle. Failure to comply may result in serious injury or death to personnel.

CAUTION

Do not operate engine with differential case oil drained from rear axle system. Failure to comply may result in severe damage to rear axle.

REAR AXLE DIFFERENTIAL DRAIN/FILL PROCEDURE - (CONTINUED)

DRAIN

1. Position drain pan under rear axle differential magnetic drain plug (Figure 1, Item 2).

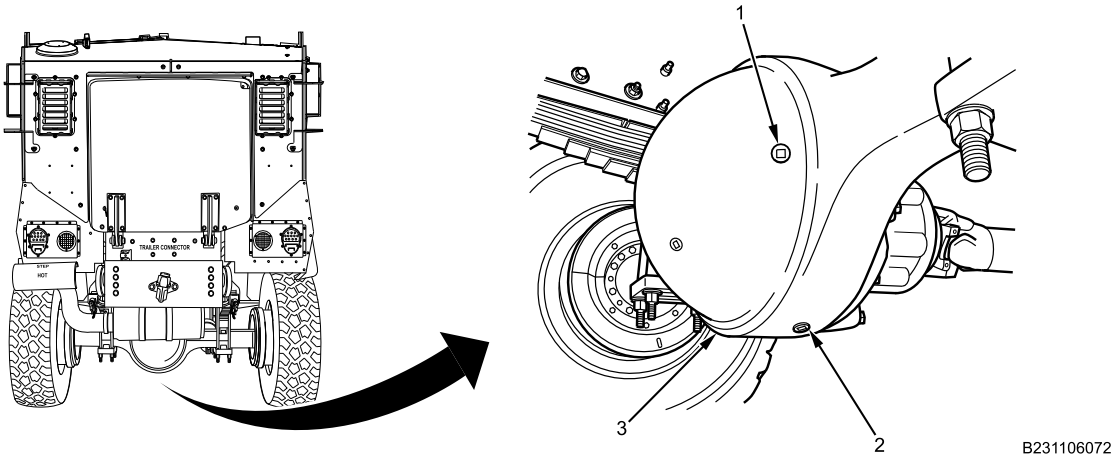

Figure 1. Rear Axle Differential.

2. Remove magnetic drain plug (Figure 1, Item 2) and drain gear oil from rear axle differential (Figure 1, Item 3).
3. Remove fill plug (Figure 1, Item 1) from rear axle differential (Figure 1, Item 3).

END OF TASK

FILL

1. Install magnetic drain plug (Figure 2, Item 2) into rear axle differential (Figure 2, Item 3). Torque to 35-50 lb-ft (48-68 N•m).

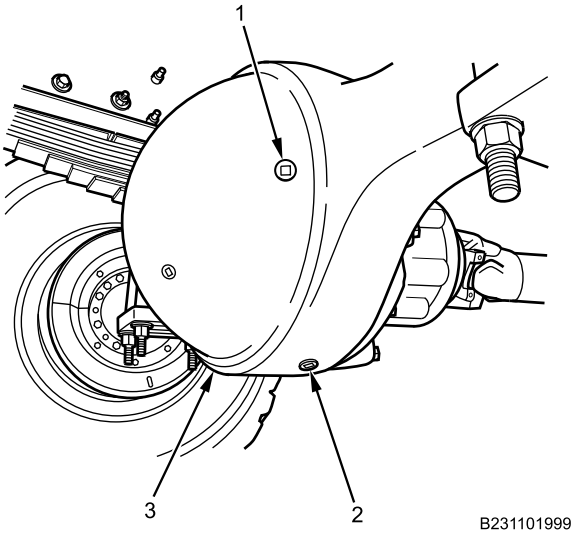

Figure 2. Rear Axle Differential.

2. Fill rear axle differential (Figure 2, Item 3) with gear oil to bottom of fill plug hole.
3. Install fill plug (Figure 2, Item 1) into rear axle differential (Figure 2, Item 3). Torque to 35-50 lb-ft (48-68 N•m).
4. Remove drain pan.

REAR AXLE DIFFERENTIAL DRAIN/FILL PROCEDURE - (CONTINUED)

5. Clean up all fluid spills with rags.

END OF TASK

FOLLOW-ON MAINTENANCE

1. Check for leaks.
2. Remove wheel chocks (TM 9-2355-106-10).
3. Turn MAIN POWER switch on (TM 9-2355-106-10).
4. Start engine; run to operating temperature (TM 9-2355-106-10).
5. Road test 1-2 miles (1.6-3.2 km) at 25 mph (40 km/h) or less.
6. Set parking brake (TM 9-2355-106-10).
7. Set transmission in NEUTRAL (N) (TM 9-2355-106-10).
8. Turn engine off (TM 9-2355-106-10).
9. Turn MAIN POWER switch off (TM 9-2355-106-10).
10. Install wheel chocks (TM 9-2355-106-10).
11. Recheck gear oil level (TM 9-2355-106-10).
12. Remove wheel chocks (TM 9-2355-106-10).

END OF TASK

END OF WORK PACKAGE

FIELD MAINTENANCE

REAR HUB ASSEMBLY BEARING AND BEARING CUP REMOVAL AND INSTALLATION

INITIAL SETUP:

Tools and Special Tools
General Mechanic's Tool Kit (GMTK) (WP 0795, Item 37)
Pan, drain, 5-gal. capacity (WP 0795, Item 75)

Materials/Parts
Lubricating oil (WP 0794, Item 28)
Seal (WP 0796, Item 49)

References
TM 9-2355-106-10
TM 9-2355-106-23P
WP 0786
WP 0782

Equipment Condition
Parking brake set (TM 9-2355-106-10)
Transmission set in NEUTRAL (N) (TM 9-2355-106-10)
Engine off (TM 9-2355-106-10)
MAIN POWER switch off (TM 9-2355-106-10)
Wheels chocked (TM 9-2355-106-10)
Rear brake drum and hub assembly removed (WP 0494)

REMOVAL

NOTE

Left shown; right similar.

Bearing cups can be damaged during removal. Inspect outer and inner bearing cups while still in hub for corrosion, wear, or damage. Remove as required for replacement.

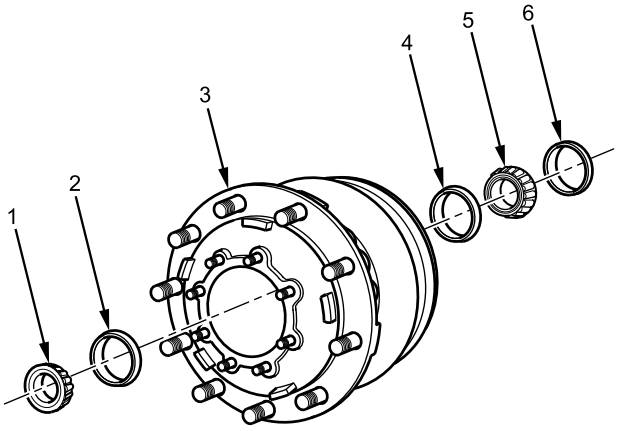

Figure 1. Rear Hub Assembly.

1. Using hammer and brass punch, remove outer bearing cup (Figure 1, Item 2) from rear hub assembly (Figure 1, Item 3).
2. Using hammer and brass punch, remove inner bearing cup (Figure 1, Item 4), inner bearing (Figure 1, Item 5), and seal (Figure 1, Item 6) from rear hub assembly (Figure 1, Item 3). Discard seal (Figure 1, Item 6).

END OF TASK

REAR HUB ASSEMBLY BEARING AND BEARING CUP REMOVAL AND INSTALLATION - (CONTINUED)

CLEANING

1. Clean bearings and bearing cups with degreaser. Dry with clean rags.

END OF TASK

INSPECTION

1. Inspect bearing and bearing cups for corrosion, wear, or damage.

END OF TASK

INSTALLATION

1. Using hammer and brass punch, install outer bearing cup (Figure 2, Item 2) and inner bearing cup (Figure 2, Item 4) into rear hub assembly (Figure 2, Item 3).

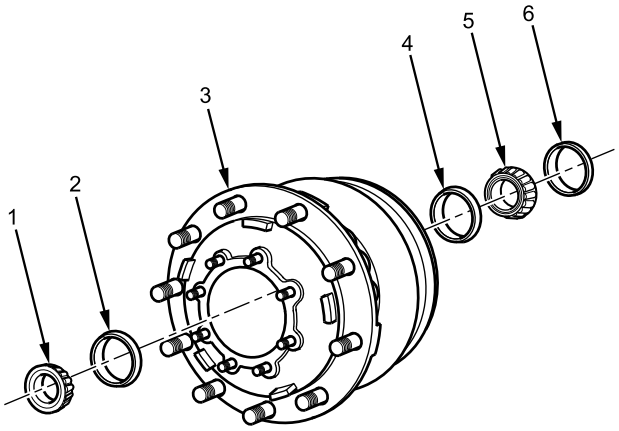

B231102187

Figure 2. Rear Hub Assembly.

2. Lubricate bearing prior to installation.
3. Install inner bearing (Figure 2, Item 5) into rear hub assembly (Figure 2, Item 3).
4. Lightly lubricate seal prior to installation.
5. Install new seal (Figure 2, Item 6) into rear hub assembly (Figure 2, Item 3).

END OF TASK

FOLLOW-ON MAINTENANCE

1. Install rear brake drum and hub assembly (WP 0494).
2. Remove wheel chocks (TM 9-2355-106-10).

END OF TASK

END OF WORK PACKAGE

FIELD MAINTENANCE

REAR AXLE OUTER HUB ASSEMBLY DRAIN/FILL PROCEDURE

INITIAL SETUP:

Tools and Special Tools
General Mechanic's Tool Kit (GMTK) (WP 0795, Item 37)
Pan, drain, 5-gal. capacity (WP 0795, Item 75)

Materials/Parts
Lubricating oil (WP 0794, Item 29)

References
TM 9-2355-106-10
TM 9-2355-106-23P
WP 0786
WP 0782

Equipment Condition
Parking brake set (TM 9-2355-106-10)
Transmission set in NEUTRAL (N) (TM 9-2355-106-10)
Engine off (TM 9-2355-106-10)
MAIN POWER switch off (TM 9-2355-106-10)
Wheels chocked (TM 9-2355-106-10)
Rear wheel and tire removed (WP 0530)

DRAIN

1. Position drain pan under rear axle hub assembly.

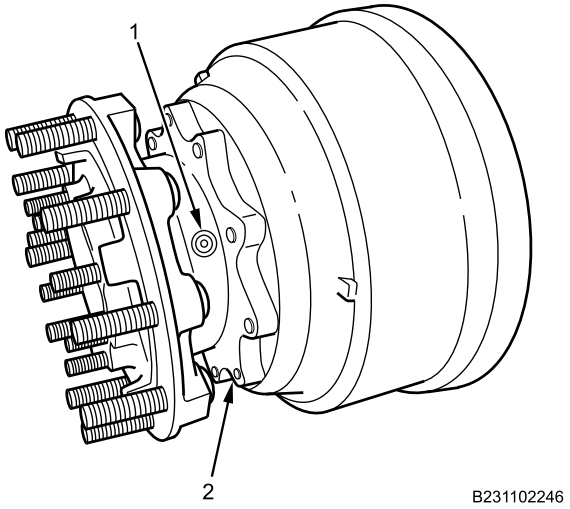

Figure 1. Drain/Fill Plug.

2. Remove drain/fill plug (Figure 1, Item 1) and drain gear oil from rear axle outer hub assembly (Figure 1, Item 2).

END OF TASK

REAR AXLE OUTER HUB ASSEMBLY DRAIN/FILL PROCEDURE - (CONTINUED)

FILL

1. Add one quart of gear oil to rear axle outer hub assembly.

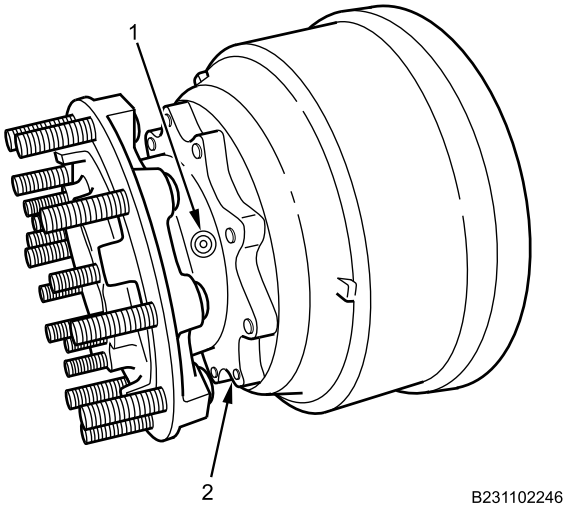

Figure 2. Rear Axle Outer Hub Plug.

2. Install drain/fill plug (Figure 2, Item 1) into rear axle outer hub assembly (Figure 2, Item 2). Tighten and secure.
3. Remove fill plug (Figure 3, Item 1) from rear axle differential (Figure 3, Item 2).

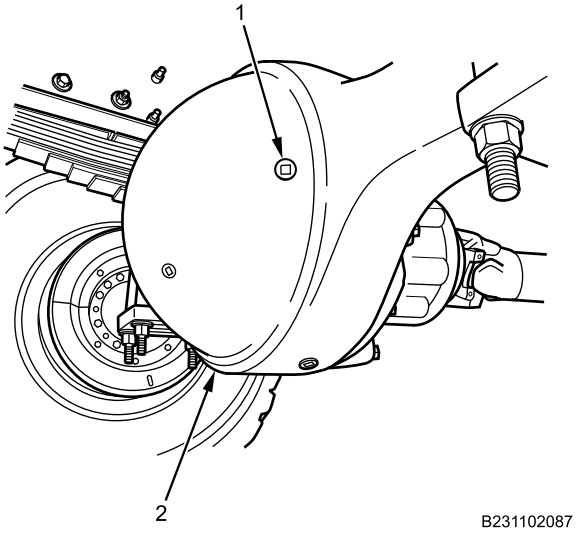

Figure 3. Rear Axle Fill Plug.

4. Check gear oil level in rear axle differential (Figure 3, Item 2).
5. Add gear oil if needed to bottom of fill plug (Figure 3, Item 1).
6. Install fill plug (Figure 3, Item 1) into rear axle differential (Figure 3, Item 2). Tighten and secure.
7. Remove drain pan.

END OF TASK

REAR AXLE OUTER HUB ASSEMBLY DRAIN/FILL PROCEDURE - (CONTINUED)

FOLLOW-ON MAINTENANCE

1. Install rear wheel and tire (WP 0530).
2. Remove wheel chocks (TM 9-2355-106-10).

END OF TASK

END OF WORK PACKAGE

FIELD MAINTENANCE

REAR AXLE SHAFT AND GASKET REMOVAL AND INSTALLATION

INITIAL SETUP:

Tools and Special Tools
General Mechanic's Tool Kit (GMTK) (WP 0795, Item 37)
Hammer, sledge, 8 lb (WP 0795, Item 46)
Torque wrench, 50-250 lb-ft, ½-in drive (WP 0795, Item 143)
Goggles, industrial (WP 0794, Item 18)
Pan, drain, 5-gal. capacity (WP 0795, Item 75)
Socket, deep well, ½-inch drive, 6 pt, 15/16 inch (WP 0795, Item 98)

Materials/Parts
Gasket (WP 0796, Item 122)
Locknut - (8) (WP 0796, Item 170)

References
TM 9-2355-106-10
TM 9-2355-106-23P
WP 0786
WP 0782

Equipment Condition
Parking brake set (TM 9-2355-106-10)
Transmission set in NEUTRAL (N) (TM 9-2355-106-10)
Engine off (TM 9-2355-106-10)
MAIN POWER switch off (TM 9-2355-106-10)
Wheels chocked (TM 9-2355-106-10)
Rear wheel and tire removed (WP 0530)
Rear axle hub drained (WP 0481)

WARNING

Always wear safety goggles when using sledge hammer. Do not strike the round driving lugs on the flange of an axle shaft. Pieces can break off and cause serious personal injury. Failure to comply may result in damage to equipment and serious injury or death to personnel.

NOTE

Left side shown; right side similar.

REAR AXLE SHAFT AND GASKET REMOVAL AND INSTALLATION - (CONTINUED)

REMOVAL

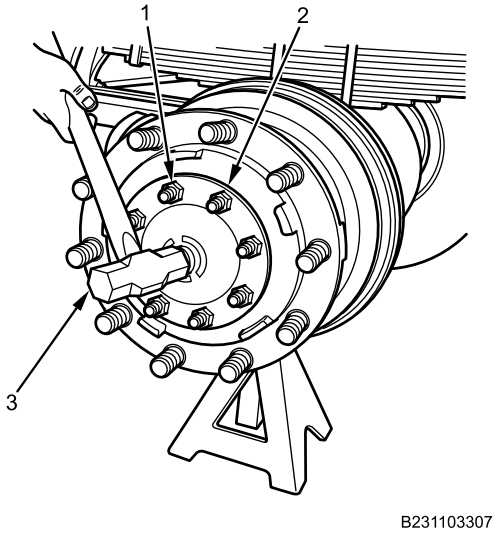

Figure 1. Rear Axle Shaft.

1. Position drain pan under hub assembly.
2. Remove eight locknuts (Figure 1, Item 1) from rear axle shaft (Figure 1, Item 2). Discard locknuts.

NOTE

Several strikes may be needed to loosen rear axle shaft.

3. Using sledge hammer (Figure 1, Item 3), strike center of rear axle shaft to loosen rear axle shaft from hub assembly.

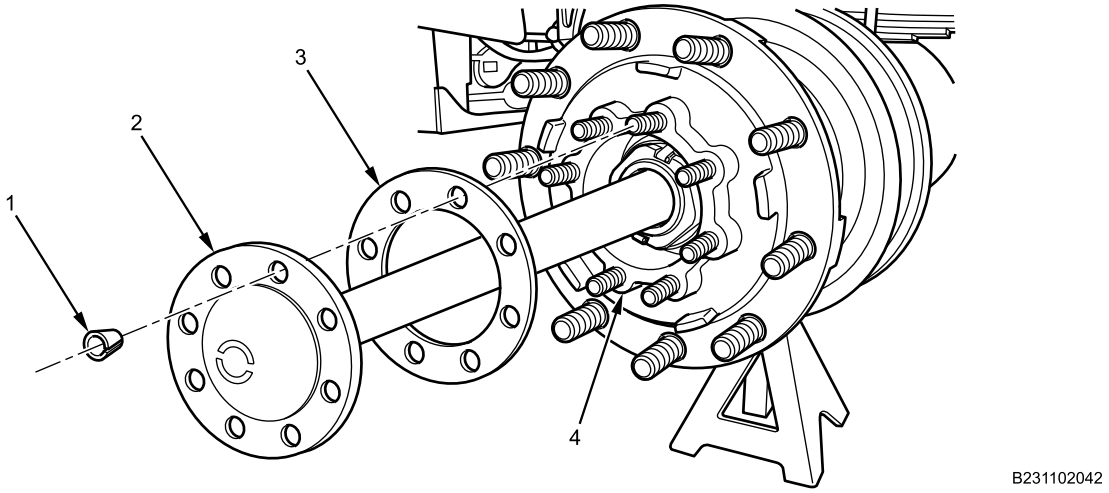

Figure 2. Rear Axle Shaft and Gasket.

4. Insert flat screwdriver into slot on dowel bushings (Figure 2, Item 1) to loosen, and remove eight dowel bushings.
5. Remove rear axle shaft (Figure 2, Item 2) and gasket (Figure 2, Item 3) from hub assembly (Figure 2, Item 4). Discard gasket.

END OF TASK

REAR AXLE SHAFT AND GASKET REMOVAL AND INSTALLATION - (CONTINUED)

INSTALLATION

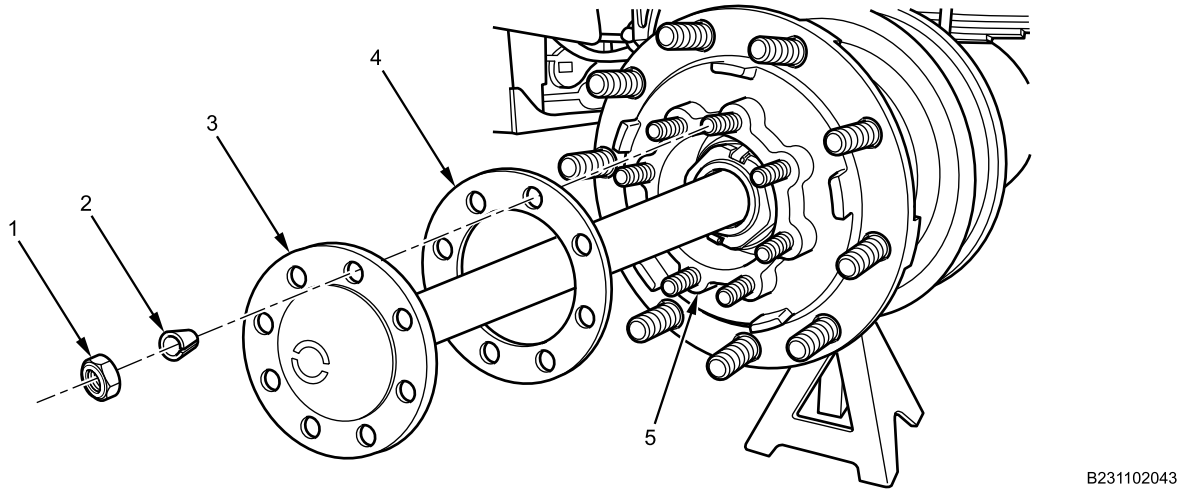

Figure 3. Rear Axle Shaft and Gasket.

1. Clean gasket mating surfaces from rear axle shaft (Figure 3, Item 3) and hub assembly (Figure 3, Item 5).

NOTE

Rear axle shaft and gasket must fit flat against the hub assembly.

2. Install new gasket (Figure 3, Item 4), rear axle shaft (Figure 3, Item 3), and eight dowel bushings (Figure 3, Item 2) on hub assembly (Figure 3, Item 5) with eight new locknuts (Figure 3, Item 1). Torque to 150-230 lb-ft (203-312 N•m).
3. Remove drain pan.

END OF TASK

FOLLOW-ON MAINTENANCE

1. Fill rear axle differential gear oil level (WP 0481).
2. Install rear wheel and tire (WP 0530).
3. Remove wheel chocks (TM 9-2355-106-10).

END OF TASK

END OF WORK PACKAGE

FIELD MAINTENANCE

FRONT AXLE ANTILOCK BRAKE SYSTEM (ABS) TONE RING REMOVAL AND INSTALLATION

INITIAL SETUP:

Tools and Special Tools
General Mechanic's Tool Kit (GMTK) (WP 0795, Item 37)
Hammer, hand, soft face, dead blow, 10 oz (WP 0795, Item 44)

Materials/Parts
Goggles, industrial (WP 0794, Item 20)

References
TM 9-2355-106-10
TM 9-2355-106-23P
WP 0782

Equipment Condition
Parking brake set (TM 9-2355-106-10)
Transmission set in NEUTRAL (N) (TM 9-2355-106-10)
Engine off (TM 9-2355-106-10)
MAIN POWER switch off (TM 9-2355-106-10)
Wheels chocked (TM 9-2355-106-10)
Front wheel and tire assembly removed (WP 0530)
Front wheel hub removed (WP 0471)

WARNING

Do not hit steel parts with a steel hammer. Do not remove wheel studs by twisting. Do not pry off parts with sharp tools. To loosen drive flange from the hub, hit flange with a soft mallet. Use a torque wrench to tighten or loosen adjusting nuts. Failure to comply may result in damage to equipment and serious injury or death to personnel.

CAUTION

Use caution to prevent damage to inner hub seal during tone wheel removal and installation.

NOTE

There are left and right ABS tone rings. This procedure covers left; right similar.

FRONT AXLE ANTILOCK BRAKE SYSTEM (ABS) TONE RING REMOVAL AND INSTALLATION - (CONTINUED)

REMOVAL

1. Drive ABS tone ring (Figure 1, Item 1) off hub (Figure 1, Item 2) using brass punch.

END OF TASK

INSTALLATION

CAUTION

Protect ABS tone ring teeth with wood blocks when installing. Damage to teeth can create an error signal during ABS operation.

1. Using dead blow hammer and block of wood, drive ABS tone ring (Figure 1, Item 1) on hub (Figure 1, Item 2). Ensure tone ring is seated squarely on hub.

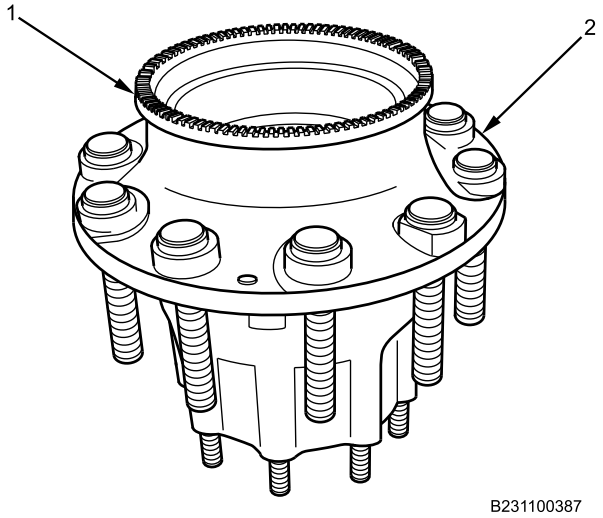

Figure 1. Tone Ring and Hub.

END OF TASK

FOLLOW-ON MAINTENANCE

1. Install front wheel hub (WP 0471).
2. Install front wheel and tire assembly (WP 0530).
3. Remove wheel chocks (TM 9-2355-106-10).

END OF TASK

END OF WORK PACKAGE

FIELD MAINTENANCE

BRAKE ADJUSTMENT PROCEDURES

INITIAL SETUP:

Tools and Special Tools
General Mechanic's Tool Kit (GMTK) (WP 0795, Item 37)

Personnel Required
Maintainer - (2)

References
TM 9-2355-106-10
TM 9-2355-106-23P
WP 0782

Equipment Condition
Parking brake set (TM 9-2355-106-10)
Transmission set in NEUTRAL (N) (TM 9-2355-106-10)
Engine off (TM 9-2355-106-10)
MAIN POWER switch off (TM 9-2355-106-10)
Wheels chocked (TM 9-2355-106-10)
Air tanks drained (TM 9-2355-106-10)
Rear brakes caged (TM 9-2355-106-10)

WARNING

Before working on air brake system or any auxiliary pressurized system, make sure air pressure has been drained from all reservoirs. Failure to comply may result in serious injury or death to personnel.

NOTE

When performing brake maintenance, perform both free stroke adjustment and air chamber pushrod travel adjustment.

There are three types of slack adjusters: one with two clevis pins and two with one clevis pin.

Free stroke sets clearance between brake shoes and drum.

Pull pawls are spring loaded. The pull pawl will re-engage automatically when released.

BRAKE ADJUSTMENT PROCEDURES - (CONTINUED)

FREE STROKE ADJUSTMENT OF FRONT AND REAR SLACK ADJUSTERS WITH TWO CLEVIS PINS

CAUTION

Disengage pull pawl before rotating the manual adjusting nut to avoid damage to the pull pawl teeth.

NOTE

Front slacker adjuster shown; rear slacker adjuster pull pawl located in different position on slack adjuster.

1. Pull and hold pull pawl (Figure 1, Item 3) from slack adjuster (Figure 1, Item 2) at least 1/32 inch (0.8 mm) to disengage teeth.

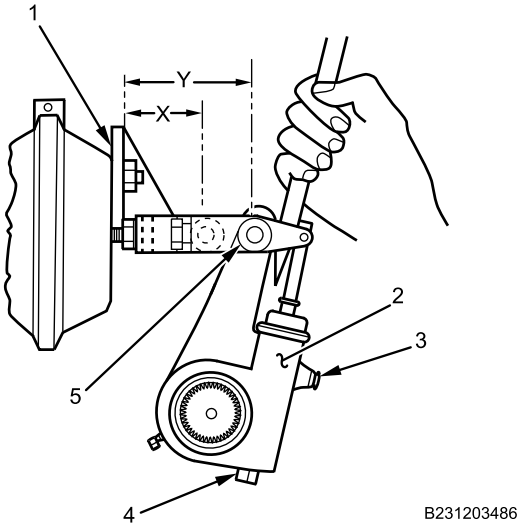

Figure 1. Two-Pin Slack Adjuster.

2. Turn adjusting nut (Figure 1, Item 4) counterclockwise until resistance is felt when brake shoes contact brake drum. Back off adjusting nut (Figure 1, Item 4) clockwise 1/2 turn.
3. Measure distance X (Figure 1) from front of air chamber bracket (Figure 1, Item 1) to center of large clevis pin (Figure 1, Item 5). This measurement is X.
4. Using pry bar, apply pressure to slack adjuster (Figure 1, Item 2) until brake shoes are against brake drum.
5. Measure distance Y (Figure 1) from front of air chamber bracket (Figure 1, Item 1) to center of large clevis pin (Figure 1, Item 5). This measurement is Y.
6. Subtract X from Y to obtain free stroke measurement. Free stroke specification is 1/2–5/8 inch (12.7–15.9 mm).

CAUTION

Free stroke specification must be met or damage to brake components can result.

7. If free stroke specification is not met, continue to turn adjusting nut (Figure 1, Item 4) as needed until within specification.

END OF TASK

BRAKE ADJUSTMENT PROCEDURES - (CONTINUED)

FREE STROKE ADJUSTMENT OF FRONT SLACK ADJUSTER WITH ONE CLEVIS PIN

1. Loosen control arm nut (Figure 2, Item 4) on slack adjuster (Figure 2, Item 2).

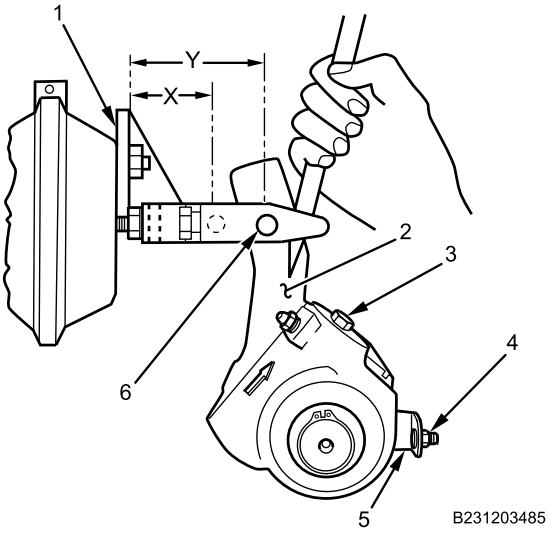

Figure 2. One-Pin Slack Adjuster.

2. Rotate control arm (Figure 2, Item 5) towards front axle until control arm (Figure 2, Item 5) comes to complete stop.
3. Tighten and secure control arm nut (Figure 2, Item 4).

NOTE

Minimum of 13 lb-ft (18 N•m) is necessary to overcome the internal clutch when turning manual adjusting nut counterclockwise. Ratcheting sound will occur when turning manual adjusting nut counterclockwise.

4. Turn adjusting nut (Figure 2, Item 3) clockwise until brake shoes contact brake drum. Back off adjusting nut (Figure 2, Item 3) counterclockwise 1/2 turn.
5. Measure distance X (Figure 2) from front of air chamber bracket (Figure 2, Item 1) to center of clevis pin (Figure 2, Item 6). This measurement is X.
6. Using pry bar, apply pressure to slack adjuster (Figure 2, Item 2) until brake shoes are against brake drum.
7. Measure distance Y (Figure 2) from front of air chamber bracket (Figure 2, Item 1) to center of clevis pin (Figure 2, Item 6). This measurement is Y.
8. Subtract X from Y to obtain free stroke measurement. Free stroke specification is 1/2–5/8 inch (12.7–15.9 mm).

CAUTION

Free stroke specification must be met or damage to brake components can result.

9. If free stroke specification is not met, continue to turn adjusting nut (Figure 2, Item 3) as needed until within specification.

END OF TASK

BRAKE ADJUSTMENT PROCEDURES - (CONTINUED)

FREE STROKE ADJUSTMENT OF REAR SLACK ADJUSTER WITH ONE CLEVIS PIN

1. Loosen control arm nut (Figure 3, Item 7) on slack adjuster (Figure 3, Item 3).

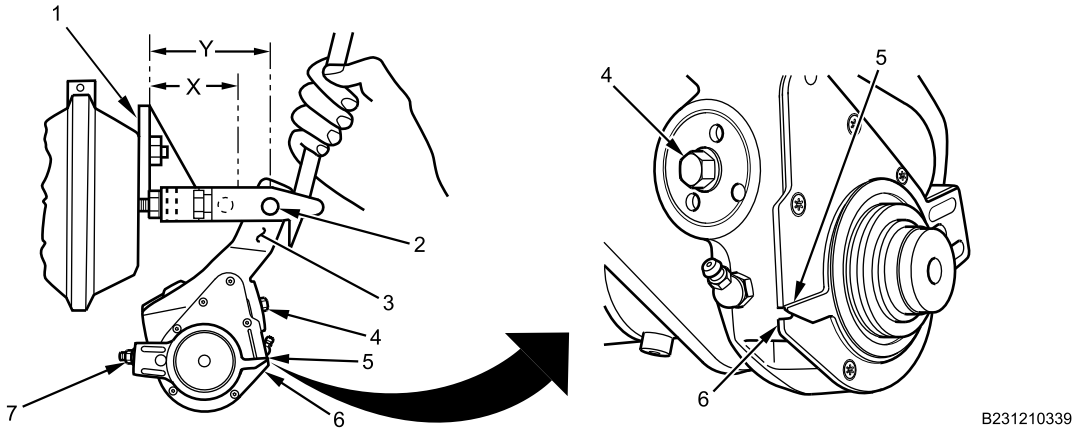

Figure 3. One-Pin Slack Adjuster.

2. Align installation indicator (Figure 3, Item 5) with slot (Figure 3, Item 6).
3. Tighten and secure control arm nut (Figure 3, Item 7).

NOTE

Minimum of 13 lb-ft (18 N•m) is necessary to overcome the internal clutch when turning manual adjusting nut counterclockwise. Ratcheting sound will occur when turning manual adjusting nut counterclockwise.

4. Turn adjusting nut (Figure 3, Item 4) clockwise until brake shoes contact brake drum. Back off adjusting nut (Figure 3, Item 4) counterclockwise 1/2 turn.
5. Measure distance X (Figure 3) from front of air chamber bracket (Figure 3, Item 1) to center of clevis pin (Figure 3, Item 2). This measurement is X.
6. Using pry bar, apply pressure to slack adjuster (Figure 3, Item 3) until brake shoes are against brake drum.
7. Measure distance Y (Figure 3) from front of air chamber bracket (Figure 3, Item 1) to center of clevis pin (Figure 3, Item 2). This measurement is Y.
8. Subtract X from Y to obtain free stroke measurement. Free stroke specification is 1/2–5/8 inch (12.7–15.9 mm).

CAUTION

Free stroke specification must be met or damage to brake components can result.

9. If free stroke specification is not met, continue to turn adjusting nut (Figure 3, Item 4) as needed until within specification.

END OF TASK

BRAKE ADJUSTMENT PROCEDURES - (CONTINUED)

PUSHROD TRAVEL ADJUSTMENT OF FRONT AND REAR SLACK ADJUSTERS WITH TWO CLEVIS PINS

1. Uncage rear brakes (TM 9-2355-106-10).
2. Turn MAIN POWER switch on (TM 9-2355-106-10).
3. Start engine and allow air brake system pressure to build to 100 psi (689 kPa) in air tanks (TM 9-2355-106-10).
4. Turn engine off (TM 9-2355-106-10).
5. With brakes released, mark pushrod where it exits air chamber. This point is X (Figure 4).

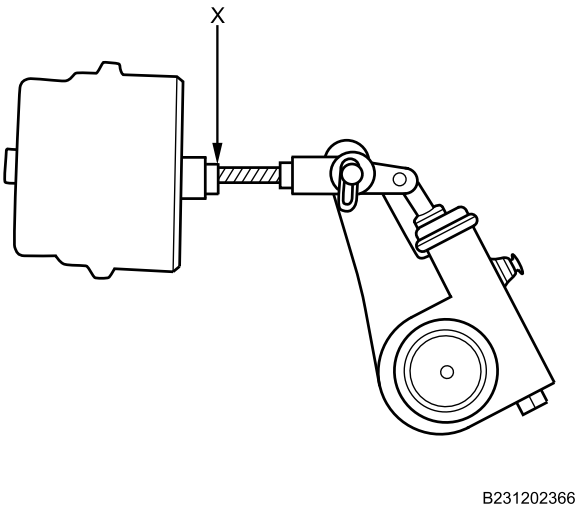

Figure 4. Pushrod.

6. Have assistant apply brake pedal. Mark pushrod where it exits air chamber. This point is Y (Figure 5).

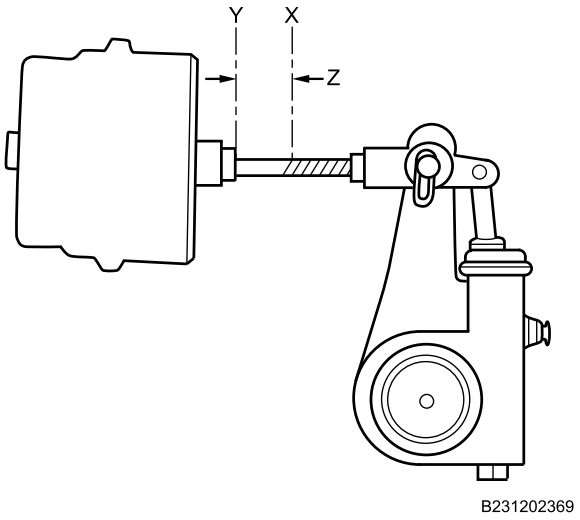

Figure 5. Pushrod Travel.

7. Measure distance between X and Y to obtain Z (Figure 5). This is the pushrod travel measurement. Pushrod travel specification is 2.5 inches (63.5 mm) maximum.
8. If pushrod travel specification is not met, replace slack adjuster.

END OF TASK

BRAKE ADJUSTMENT PROCEDURES - (CONTINUED)

PUSHROD TRAVEL ADJUSTMENT OF FRONT AND REAR SLACK ADJUSTERS WITH ONE CLEVIS PIN

NOTE

Front shown; rear similar.

1. Uncage rear brakes (TM 9-2355-106-10).
2. Turn MAIN POWER switch on (TM 9-2355-106-10).
3. Start engine and allow air brake system pressure to build to 100 psi (689 kPa) in air tanks (TM 9-2355-106-10).
4. Turn engine off (TM 9-2355-106-10).
5. MAIN POWER switch off (TM 9-23555-106-10).
6. With brakes released, mark pushrod where it exits air chamber. This point is X (Figure 6).

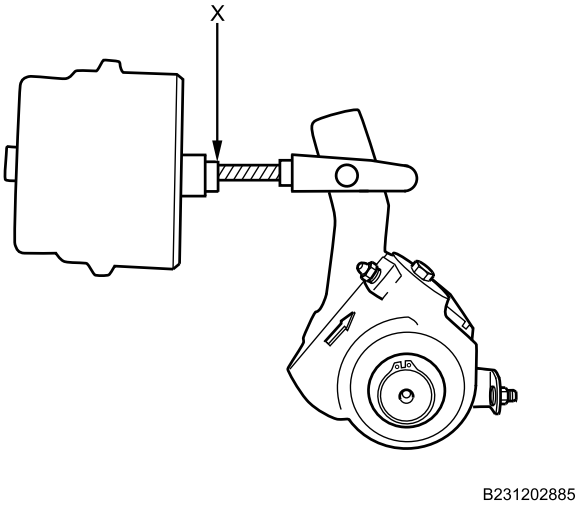

Figure 6. Pushrod.

7. Have assistant apply brake pedal. Mark pushrod where it exits air chamber. This point is Y (Figure 7).

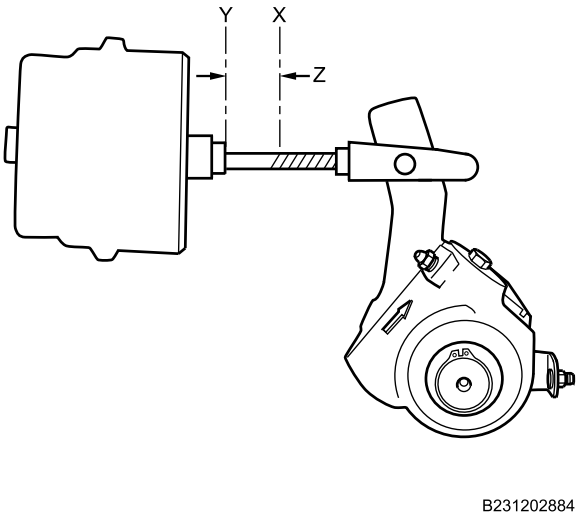

Figure 7. Pushrod Travel.

8. Measure distance between X and Y to obtain Z (Figure 7). This is the pushrod travel measurement. Pushrod travel specification is 2.5 inches (63.5 mm) maximum.

BRAKE ADJUSTMENT PROCEDURES - (CONTINUED)

9. If pushrod travel specification is not met, replace slack adjuster.

END OF TASK

FOLLOW-ON MAINTENANCE

1. Turn MAIN POWER switch on (TM 9-2355-106-10).
2. Start engine and allow air brake system pressure to build to normal range (TM 9-2355-106-10).
3. Release parking brake (TM 9-2355-106-10).
4. Test drive to verify proper brake operation (TM 9-2355-106-10).
5. Set parking brake (TM 9-2355-106-10).
6. Turn engine off (TM 9-2355-106-10).
7. Turn MAIN POWER switch off (TM 9-2355-106-10).
8. Remove wheel chocks (TM 9-2355-106-10).

END OF TASK

END OF WORK PACKAGE

FIELD MAINTENANCE

FRONT BRAKE DUST SHIELD REMOVAL AND INSTALLATION

INITIAL SETUP:

Tools and Special Tools
General Mechanic's Tool Kit, (GMTK) (WP 0795, Item 37)

Materials/Parts
Goggles, industrial (WP 0794, Item 20)
Gloves (WP 0794, Item 18)
Faceshield, industrial (WP 0794, Item 16)
Compound (WP 0794, Item 13)
Bolt - (5) (WP 0796, Item 163)

References
TM 9-2355-106-10
TM 9-2355-106-23P
WP 0782

Equipment Condition
Parking brake set (TM 9-2355-106-10)
Transmission set in NEUTRAL (N) (TM 9-2355-106-10)
Engine off (TM 9-2355-106-10)
MAIN POWER switch off (TM 9-2355-106-10)
Wheels chocked (TM 9-2355-106-10)
Front wheel and tire removed (WP 0530)
Front brake drum removed (WP 0487)
Front wheel hub removed (WP 0471)
Front brake shoes removed (WP 0486)

NOTE

Left shown; right similar.

REMOVAL

1. Remove five bolts (Figure 1, Item 3), upper dust shield (Figure 1, Item 2), and lower dust shield (Figure 1, Item 1) from brake spider assembly (Figure 1, Item 4). Discard bolts (Figure 1, Item 3).

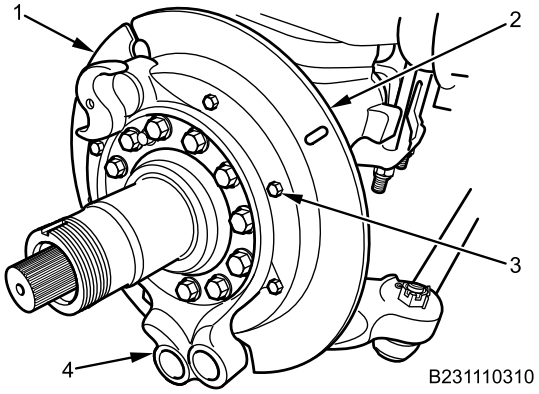

Figure 1. Dust Shield.

END OF TASK

FRONT BRAKE DUST SHIELD REMOVAL AND INSTALLATION - (CONTINUED)

INSTALLATION

WARNING

Corrosion preventive compound is toxic. Use only in well-ventilated area. Use approved respirator with dual organic vapor/mist and particulate cartridge. Do not get in eyes; wear chemical safety goggles and full-face shield when using. Avoid contact with skin and wear rubber or plastic, solvent-resistant gloves. In case of contact, remove contaminated clothing and immediately wash area with soap and water. If compound contacts eyes, flush eyes with large amounts of water for at least 15 minutes and get immediate medical attention. If swallowed, do not induce vomiting; contact a physician immediately. Failure to comply may result in serious injury or death to personnel.

1. Apply corrosion preventive compound on five new dust shield bolt threads.

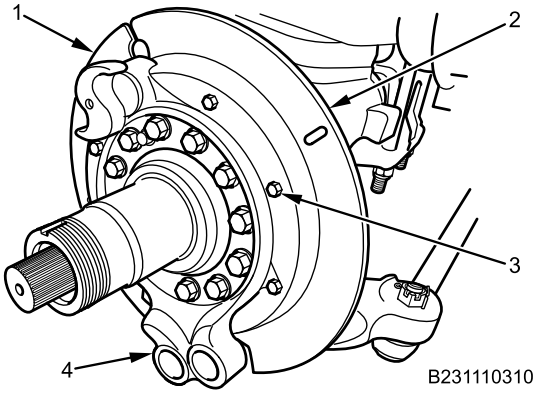

Figure 2. Dust Shield.

2. Install lower dust shield (Figure 2, Item 1) and upper dust shield (Figure 2, Item 2) on brake spider assembly (Figure 2, Item 4) with five new bolts (Figure 2, Item 3). Tighten securely.

END OF TASK

FOLLOW-ON MAINTENANCE

1. Install front brake shoes (WP 0486).
2. Install front wheel hub (WP 0471).
3. Install front brake drum (WP 0487).
4. Install front wheel and tire (WP 0530).
5. Remove wheel chocks (TM 9-2355-106-10).

END OF TASK

END OF WORK PACKAGE

FIELD MAINTENANCE

FRONT BRAKE SHOES REMOVAL AND INSTALLATION

INITIAL SETUP:

Tools and Special Tools
General Mechanic's Tool Kit (GMTK) (WP 0795, Item 37)

Materials/Parts
Grease (WP 0794, Item 23)
Cleaner (WP 0794, Item 9)
Brake spring (WP 0796, Item 109)
Brake spring - (2) (WP 0796, Item 107)

Personnel Required
Maintainer (2)

References
TM 9-2355-106-10
TM 9-2355-106-23P
WP 0782

Equipment Condition
Parking brake set (TM 9-2355-106-10)
Transmission set in NEUTRAL (N)(TM 9-2355-106-10)
Engine off (TM 9-2355-106-10)
MAIN POWER switch off (TM 9-2355-106-10)
Wheels chocked (TM 9-2355-106-10)
Air tanks drained (TM 9-2355-106-10)
Front wheel and tire removed (WP 0530)
Brake shoes retracted (WP 0484)
Front brake drum removed (WP 0487)
Front wheel hub removed (WP 0471)

WARNING

Before working on air brake system or any auxiliary pressurized system, make sure air pressure has been drained from all reservoirs. Failure to comply may result in serious injury or death to personnel.

Do not allow grease or oil to contact brake linings. Linings can absorb grease and oil, causing early glazing and reduced braking action. Failure to comply may result in serious injury or death to personnel.

NOTE

Left side shown; right side similar.

FRONT BRAKE SHOES REMOVAL AND INSTALLATION - (CONTINUED)

REMOVAL

NOTE

Note location and orientation of brake shoes and springs for installation.

1. Lift up on upper brake shoe (Figure 1, Item 3), and remove roller (Figure 1, Item 2) and roller retainer from brake S-camshaft.

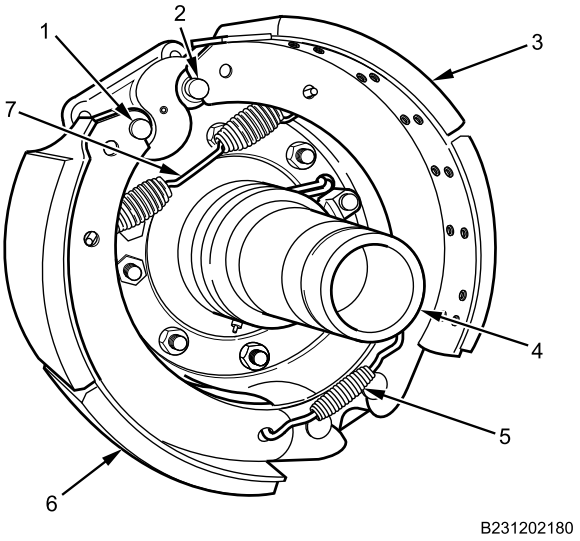

Figure 1. Front Brake Shoes.

2. Push down on lower brake shoe (Figure 1, Item 6), and remove roller (Figure 1, Item 1) and roller retainer from brake S-camshaft.
3. Remove return spring (Figure 1, Item 7), two retaining springs (Figure 1, Item 5), upper brake shoe (Figure 1, Item 3), and lower brake shoe (Figure 1, Item 6) from front wheel hub (Figure 1, Item 4). Discard return spring and retaining springs.
4. Remove two anchor pins (Figure 2, Item 2) from spider assembly (Figure 2, Item 1).

FRONT BRAKE SHOES REMOVAL AND INSTALLATION - (CONTINUED)

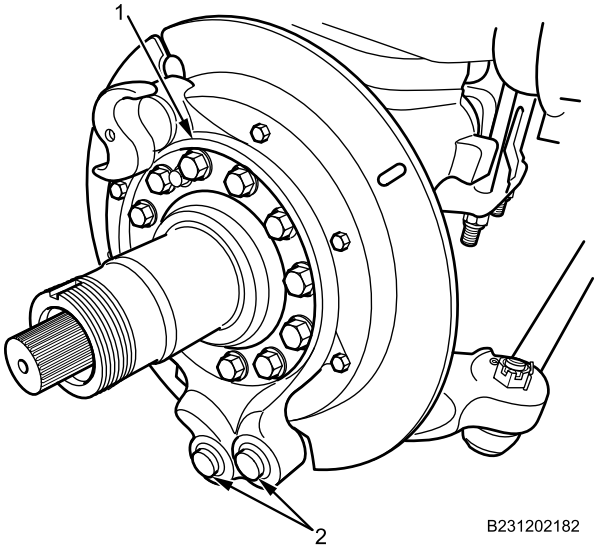

Figure 2. Anchor Pin.

END OF TASK

FRONT BRAKE SHOES REMOVAL AND INSTALLATION - (CONTINUED)

INSTALLATION

WARNING

Silicone grease is harmful to skin and eyes. If silicone grease contacts eyes, rinse thoroughly and contact physician if irritation persists. If skin is contacted, wash thoroughly with soap and water. Failure to comply may result in serious injury to personnel.

1. Apply silicone grease inside two anchor pin bushings.

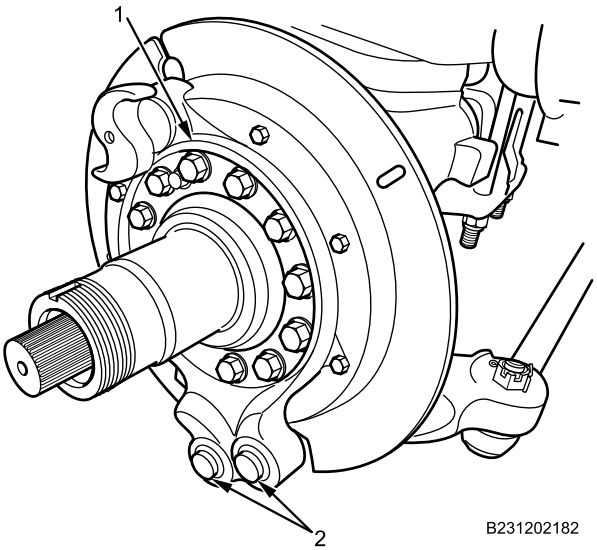

Figure 3. Anchor Pin.

2. Install two anchor pins (Figure 3, Item 2) into spider assembly (Figure 3, Item 1).

NOTE

Do not apply silicone grease where rollers contact brake S-camshaft.

3. Apply silicone grease only where brake shoes contact rollers (Figure 4, Item 1 and 2).

FRONT BRAKE SHOES REMOVAL AND INSTALLATION - (CONTINUED)

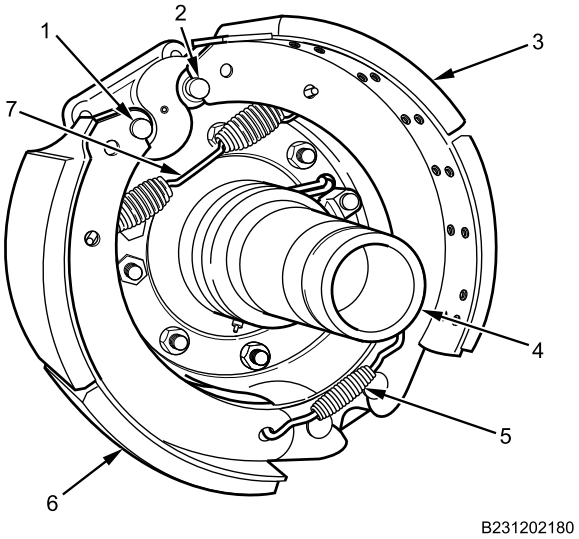

Figure 4. Brake Shoes.

4. Install upper brake shoe (Figure 4, Item 3) and lower brake shoe (Figure 4, Item 6) on front wheel hub (Figure 4, Item 4) with new return spring (Figure 4, Item 7) and two new retaining springs (Figure 4, Item 5).
5. With assistant, lift upper brake shoe (Figure 4, Item 3), and install roller (Figure 4, Item 2) and roller retainer on brake S-camshaft.
6. Push down on lower brake shoe (Figure 4, Item 6), and install roller (Figure 4, Item 1) and roller retainer on brake S-camshaft.

END OF TASK

FOLLOW-ON MAINTENANCE

1. Install front wheel hub (WP 0471).
2. Install front brake drum (WP 0487).
3. Adjust brake shoes (WP 0484).
4. Install front wheel and tire (WP 0530).
5. Turn MAIN POWER switch on (TM 9-2355-106-10).
6. Start engine and allow air brake system pressure to build to normal range.
7. Checks for leaks.
8. Turn engine off (TM 9-2355-106-10).
9. Turn MAIN POWER switch off (TM 9-2355-106-10).
10. Remove wheel chocks (TM 9-2355-106-10).

END OF TASK

END OF WORK PACKAGE

FIELD MAINTENANCE

FRONT BRAKE DRUM REMOVAL AND INSTALLATION

INITIAL SETUP:

Tools and Special Tools
General Mechanic's Tool Kit (GMTK) (WP 0795, Item 37)
Hammer, hand, soft face, dead blow, 52 oz (WP 0795, Item 45)

Personnel Required
Maintainer - (2)

References
TM 9-2355-106-10
TM 9-2355-106-23P
WP 0782

Equipment Condition
Parking brake set (TM 9-2355-106-10)
Transmission set in NEUTRAL (N) (TM 9-2355-106-10)
Engine off (TM 9-2355-106-10)
MAIN POWER switch off (TM 9-2355-106-10)
Wheels chocked (TM 9-2355-106-10)
Front wheel and tire removed (WP 0530)

REMOVAL

NOTE

Left side shown; right side similar.

Several strikes may be needed to loosen front brake drum.

NOTE

1. Strike front brake drum (Figure 1, Item 1) with dead blow hammer to loosen from hub assembly (Figure 1, Item 2).
2. With assistant, remove front brake drum (Figure 1, Item 1) from hub assembly (Figure 1, Item 2).

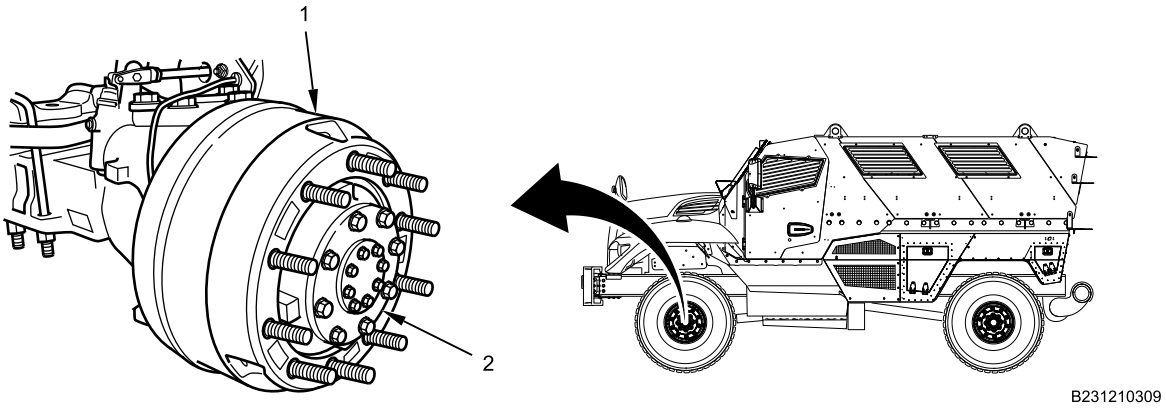

Figure 1. Front Brake Drum.

END OF TASK

FRONT BRAKE DRUM REMOVAL AND INSTALLATION - (CONTINUED)

INSTALLATION

1. With assistant, install front brake drum (Figure 2, Item 1) on hub assembly (Figure 2, Item 2).

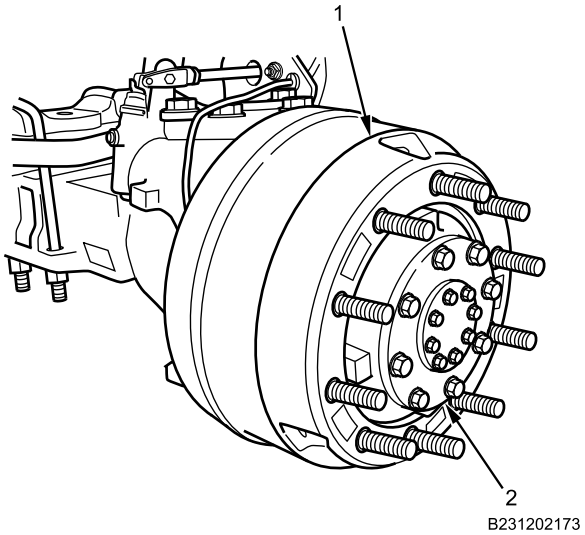

Figure 2. Front Brake Drum.

END OF TASK

FOLLOW-ON MAINTENANCE

1. Install front wheel and tire (WP 0530).
2. Remove wheel chocks (TM 9-2355-106-10).

END OF TASK

END OF WORK PACKAGE

FIELD MAINTENANCE

FRONT BRAKE S-CAMSHAFT REMOVAL AND INSTALLATION

INITIAL SETUP:

Tools and Special Tools
General Mechanic's Tool Kit (GMTK) (WP 0795, Item 37)
Grease gun, pneumatic (WP 0795, Item 41)
Dial indicator set (WP 0795, Item 27)
Pliers, Snapring Tool kit (WP 0795, Item 92)

Materials/Parts
Grease (WP 0794, Item 21)
Washer, shim - (2) (WP 0796, Item 42)

References
TM 9-2355-106-10
TM 9-2355-106-23P
WP 0782

Equipment Condition
Parking brake set (TM 9-2355-106-10)
Transmission set in NEUTRAL (N) (TM 9-2355-106-10)
Engine off (TM 9-2355-106-10)
MAIN POWER switch off (TM 9-2355-106-10)
Wheels chocked (TM 9-2355-106-10)
Air tanks drained (TM 9-2355-106-10)
Front wheel and tire removed (WP 0530)
Front drum removed (WP 0487)
Front wheel hub removed (WP 0471)
Front brake shoes removed (WP 0486)
Front brake dust shield removed (WP 0485)

NOTE

Left side shown; right side similar.

Note location and number of washers for installation.

REMOVAL

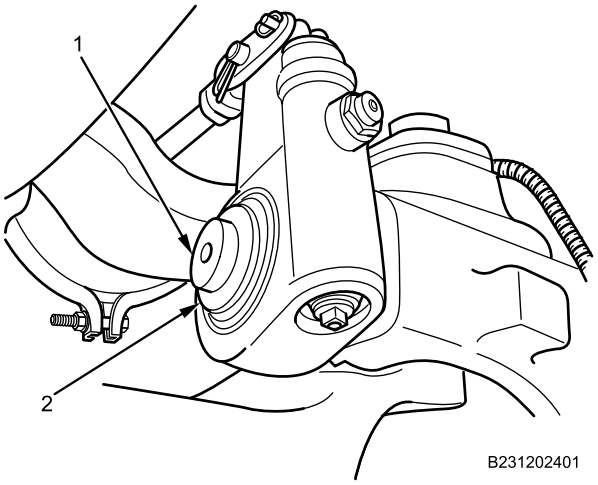

Figure 1. Snapring Removal.

1. Remove snapring (Figure 1, Item 2) and washers from brake S-camshaft (Figure 1, Item 1). Discard washers.

FRONT BRAKE S-CAMSHAFT REMOVAL AND INSTALLATION - (CONTINUED)

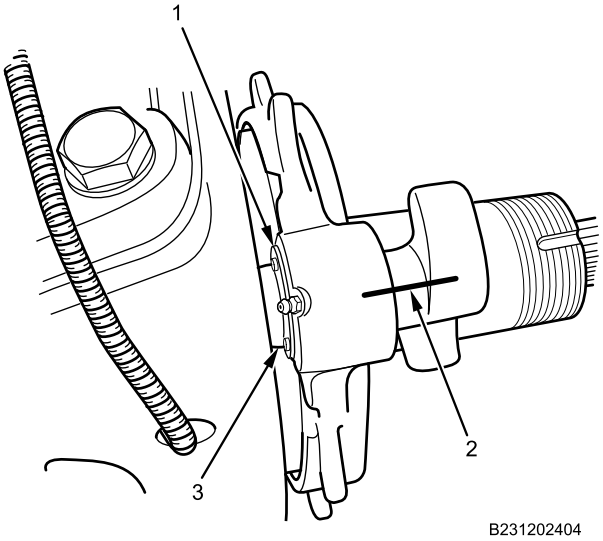

Figure 2. Horizontal Line.

2. Scribe horizontal line (Figure 2, Item 2) on brake S-camshaft (Figure 2, Item 3) and spider assembly.
3. Remove snapring (Figure 2, Item 1) from brake S-camshaft (Figure 2, Item 3).

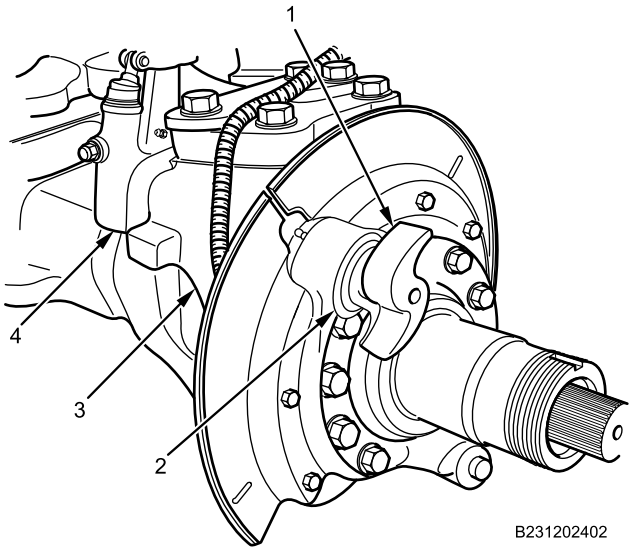

Figure 3. Brake S-Camshaft.

4. Remove brake S-camshaft (Figure 3, Item 1) and three washers from slack adjuster assembly (Figure 3, Item 4), steering knuckle (Figure 3, Item 3), and spider assembly (Figure 3, Item 2).

END OF TASK

FRONT BRAKE S-CAMSHAFT REMOVAL AND INSTALLATION - (CONTINUED)

INSTALLATION

1. Install brake S-camshaft (Figure 3, Item 1) and washer into spider assembly (Figure 3, Item 2).
2. Install washer onto brake S-camshaft in between spider assembly (Figure 3, Item 2) and steering knuckle (Figure 3, Item 3), and continue pushing brake S-camshaft through steering knuckle.
3. Install washer onto brake S-camshaft in between steering knuckle (Figure 3, Item 3) and slack adjuster (Figure 3, Item 4), and continue pushing brake S-camshaft through slack adjuster.
4. Align brake S-camshaft and spider assembly, using scribed horizontal line (Figure 2, Item 2).
5. Secure brake S-camshaft (Figure 2, Item 3) with snapring (Figure 2, Item 1).

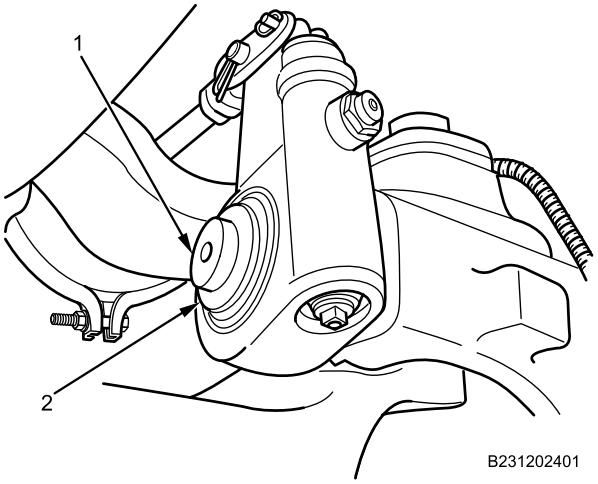

Figure 4. Snapring Installation.

6. Check end play between brake S-camshaft (Figure 4, Item 1) and slack adjuster assembly with dial indicator. Desired end play is 0.000-0.060 in. (0.00-1.5 mm).
7. Install new washers as necessary onto brake S-camshaft (Figure 4, Item 1), and secure slack adjuster assembly with snapring (Figure 4, Item 2).
8. Grease brake S-camshaft outer grease fitting (Figure 5, Item 1).

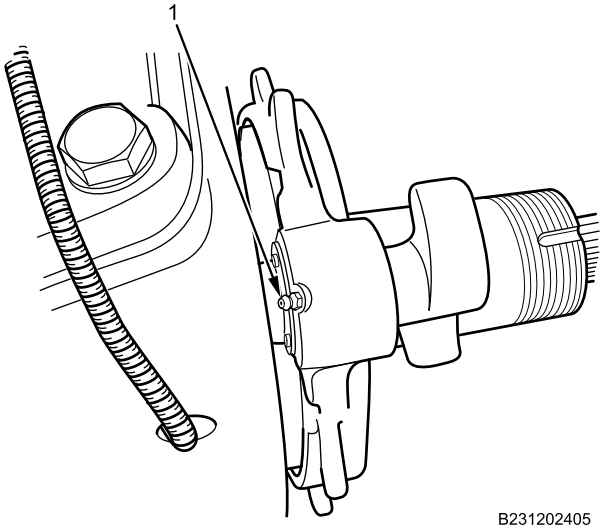

Figure 5. Outer Grease Fitting.

FRONT BRAKE S-CAMSHAFT REMOVAL AND INSTALLATION - (CONTINUED)

9. Grease brake S-camshaft inner grease fitting (Figure 6, Item 1).

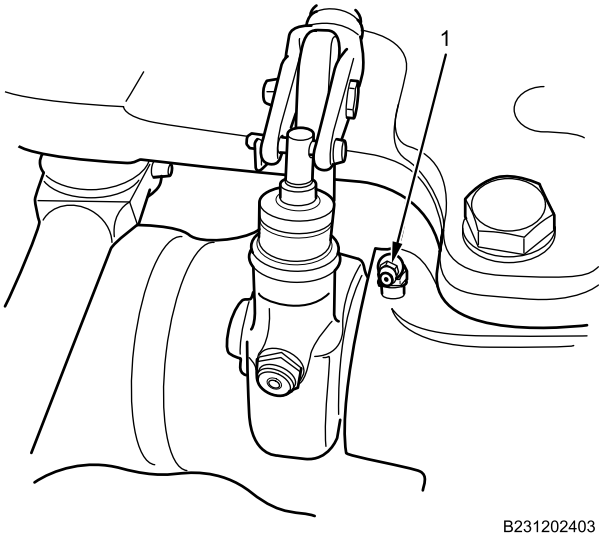

Figure 6. Inner Grease Fitting.

END OF TASK

FOLLOW-ON MAINTENANCE

1. Install front brake dust shield (WP 0485).
2. Install front brake shoes (WP 0486).
3. Install front wheel hub (WP 0471).
4. Install front brake drum (WP 0487).
5. Adjust brake shoes (WP 0484).
6. Install front wheel and tire (WP 0530).
7. Turn MAIN POWER switch on (TM 9-2355-106-10).
8. Start engine and allow air brake system pressure to build to normal range (TM 9-2355-106-10).
9. Verify proper brake operation.
10. Check for leaks.
11. Turn engine off (TM 9-2355-106-10).
12. Turn MAIN POWER switch off (TM 9-2355-106-10).
13. Remove wheel chocks (TM 9-2355-106-10).

END OF TASK

END OF WORK PACKAGE

FIELD MAINTENANCE

FRONT BRAKE SPIDER AND SPINDLE ASSEMBLY REMOVAL AND INSTALLATION

INITIAL SETUP:

Tools and Special Tools
General Mechanic's Tool Kit (GMTK) (WP 0795, Item 37)
Seal Driver Tool Kit, Arvin-Meritor No. 4454 (WP 0795, Item 89)
Master puller set (WP 0795, Item 78)
Wrench, torque, 90-600 lb-ft, 3/4-inch drive (WP 0795, Item 144)

Materials/Parts
Compound (WP 0794, Item 13)
Gloves (WP 0794, Item 18)
Grease (WP 0794, Item 21)
Bushing (WP 0796, Item 39)
Bushing - (2) (WP 0796, Item 38)
Seal - (2) (WP 0796, Item 115)
Bushing - (2) (WP 0796, Item 40)
Seal - (2) (WP 0796, Item 1)

Personnel Required
Maintainer - (2)

References
TM 9-2355-106-10
TM 9-2355-106-23P
WP 0782

Equipment Condition
Parking brake set (TM 9-2355-106-10)
Transmission set in NEUTRAL (N) (TM 9-2355-106-10)
Engine off (TM 9-2355-106-10)
MAIN POWER switch off (TM 9-2355-106-10)
Wheels chocked (TM 9-2355-106-10)
Air tanks drained (TM 9-2355-106-10)
Front Antilock Brake System (ABS) sensor removed (WP 0425)
Front wheel hub removed (WP 0471)
Front brake shoes removed (WP 0486)
Front brake S-camshaft removed (WP 0488)

REMOVAL

NOTE

Left side shown; right side similar. Note orientation of bolts for installation.

FRONT BRAKE SPIDER AND SPINDLE ASSEMBLY REMOVAL AND INSTALLATION - (CONTINUED)

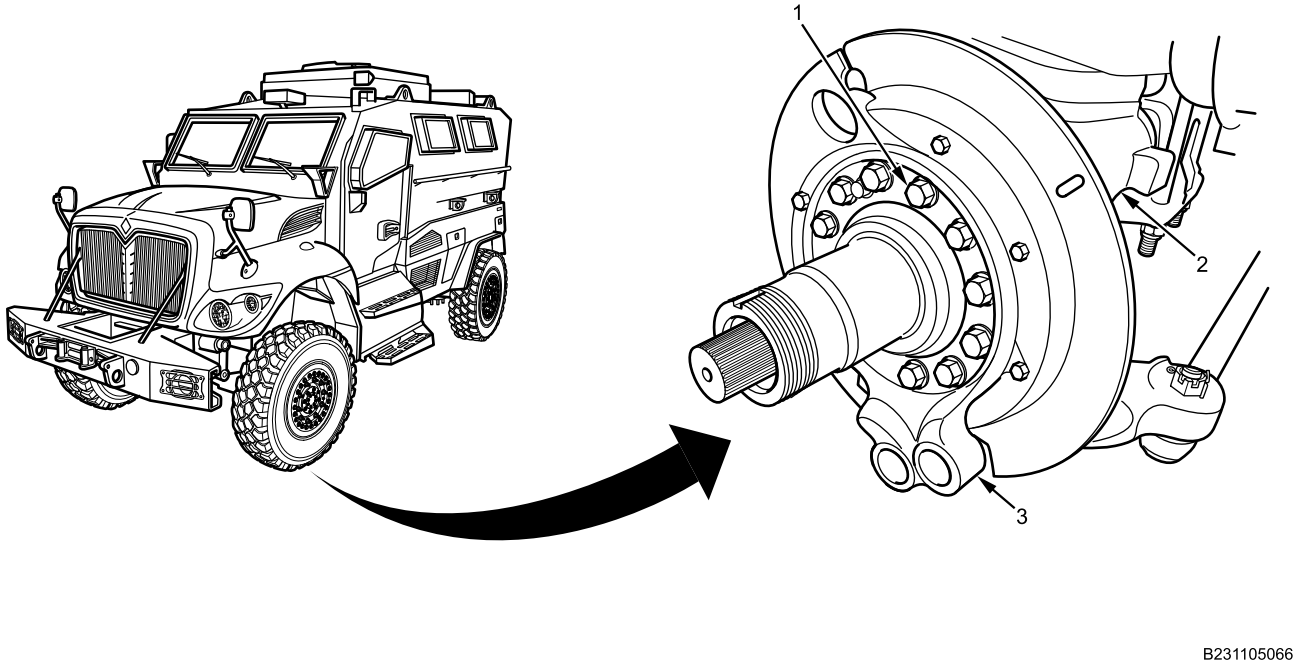

Figure 1. Front Brake Spider Assembly Removal.

1. Remove 12 bolts (Figure 1, Item 1), 12 washers, and front brake spider assembly (Figure 1, Item 3) from knuckle (Figure 1, Item 2).

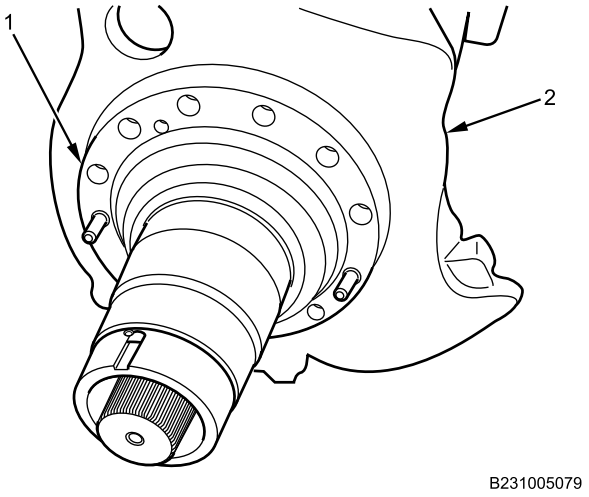

Figure 2. Spindle Assembly Removal.

2. Remove spindle (Figure 2, Item 1) from knuckle (Figure 2, Item 2).

END OF TASK

FRONT BRAKE SPIDER AND SPINDLE ASSEMBLY REMOVAL AND INSTALLATION - (CONTINUED)

FRONT BRAKE SPIDER DISASSEMBLY

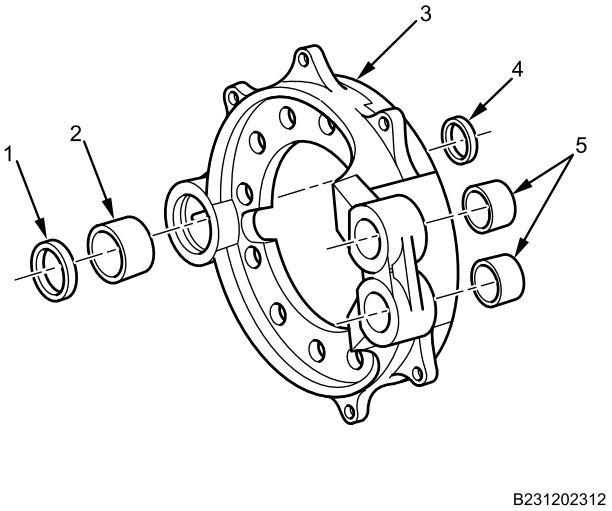

Figure 3. Remove Seals and Bushings.

1. Using seal removal tool, remove two camshaft seals (Figure 3, Item 1 and 4) from front brake spider assembly (Figure 3, Item 3). Discard seals.
2. Using bushing puller tool, remove two anchor pin bushings (Figure 3, Item 5) and camshaft bushing (Figure 3, Item 2) from front brake spider assembly (Figure 3, Item 3). Discard bushings.

END OF TASK

FRONT BRAKE SPIDER AND SPINDLE ASSEMBLY REMOVAL AND INSTALLATION - (CONTINUED)

SPINDLE DISASSEMBLY

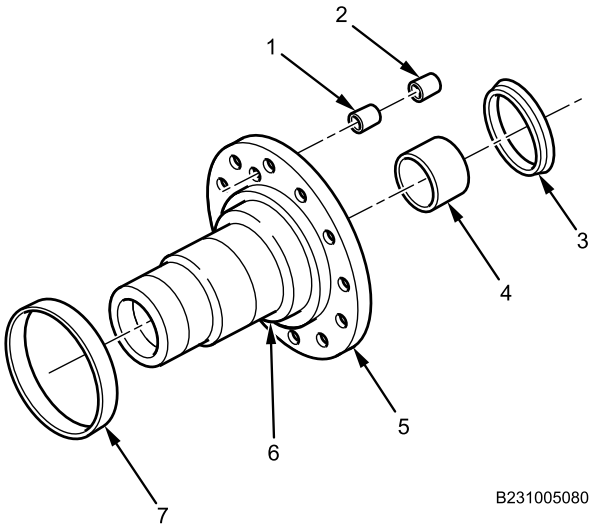

Figure 4. Spindle and ABS Sensor Sleeve and Clip.

1. Remove ABS sensor steel sleeve (Figure 4, Item 2) and clip (Figure 4, Item 1) from spindle (Figure 4, Item 5).
2. Remove spindle oil seal sleeve (Figure 4, Item 7) from spindle shoulder (Figure 4, Item 6).
3. Remove grease seal (Figure 4, Item 3) and axle bushing (Figure 4, Item 4) from spindle (Figure 4, Item 5). Discard seal and axle bushing.

END OF TASK

FRONT BRAKE SPIDER ASSEMBLY

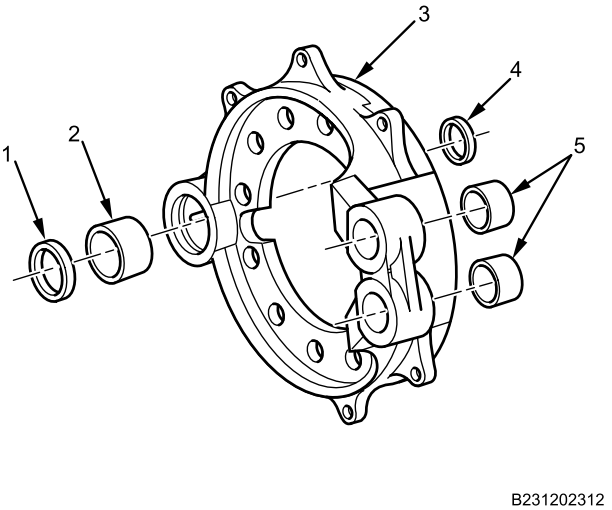

Figure 5. Install Seals and Bushings.

1. Grease two new anchor pin bushings (Figure 5, Item 5).
2. Using seal driver tool, install two new anchor pin bushings (Figure 5, Item 5) into front brake spider assembly (Figure 5, Item 3).

FRONT BRAKE SPIDER AND SPINDLE ASSEMBLY REMOVAL AND INSTALLATION - (CONTINUED)

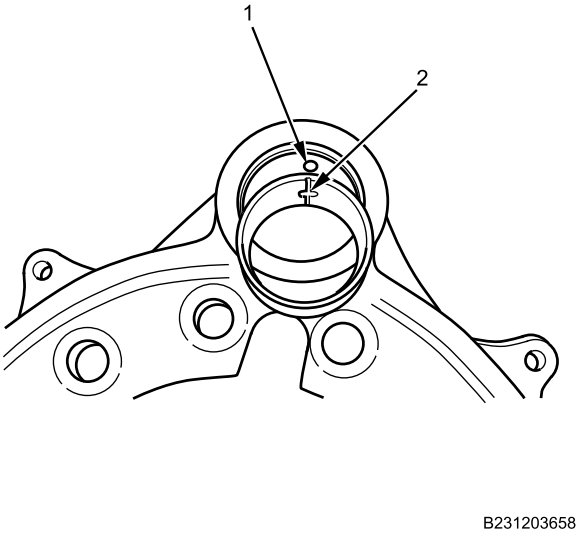

Figure 6. Camshaft Bushings Alignment.

3. Align one of the lubrication holes in the bushing (Figure 6, Item 2) with the lubrication hole on the brake spider (Figure 6, Item 1).
4. Grease camshaft bushing (Figure 6, Item 2).
5. Grease two new camshaft seals (Figure 5, Item 1 and 4).
6. Using seal driver tool, install two new camshaft seals (Figure 5, Item 1 and 4) into front brake spider assembly (Figure 5, Item 3).

END OF TASK

FRONT BRAKE SPIDER AND SPINDLE ASSEMBLY REMOVAL AND INSTALLATION - (CONTINUED)

SPINDLE ASSEMBLY

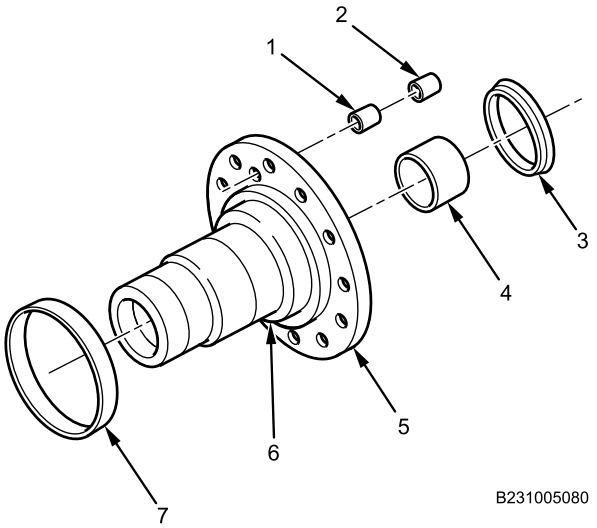

Figure 7. Spindle and ABS Sensor Sleeve and Clip.

1. Install spindle oil seal sleeve (Figure 7, Item 7) on spindle (Figure 7, Item 5). Oil seal sleeve should be 15/16 inch (23.8 mm) below inner bearing shoulder (Figure 7, Item 6) on spindle (Figure 7, Item 5).
2. Install ABS sensor steel sleeve (Figure 7, Item 2) and clip (Figure 7, Item 1) in spindle (Figure 7, Item 5).
3. Install new axle bushing (Figure 7, Item 4) and new grease seal (Figure 7, Item 3) in spindle (Figure 7, Item 5).
4. Fill axle bushing (Figure 7, Item 4) and grease seal (Figure 7, Item 3) with grease.

END OF TASK

FRONT BRAKE SPIDER AND SPINDLE ASSEMBLY REMOVAL AND INSTALLATION - (CONTINUED)

INSTALLATION

WARNING

Corrosion preventive compound is toxic. Use only in well-ventilated area. Do not get in eyes; wear chemical safety goggles and full-face shield when using. Avoid contact with skin and wear rubber or plastic, solvent-resistant gloves. In case of contact, remove contaminated clothing and immediately wash area with soap and water. If compound contacts eyes, flush eyes with large amounts of water for at least 15 minutes and get immediate medical attention. If swallowed, do not induce vomiting; contact a physician immediately. Failure to comply may result in serious injury or death to personnel.

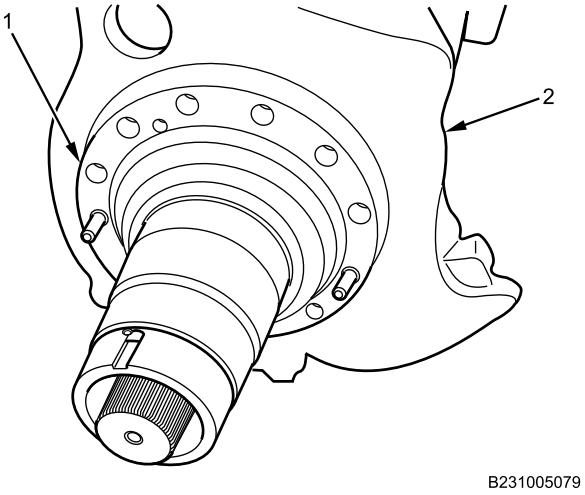

Figure 8. Spindle Assembly Installation.

1. Install spindle (Figure 8, Item 1) on knuckle (Figure 8, Item 2) with keyway slot toward top.

FRONT BRAKE SPIDER AND SPINDLE ASSEMBLY REMOVAL AND INSTALLATION - (CONTINUED)

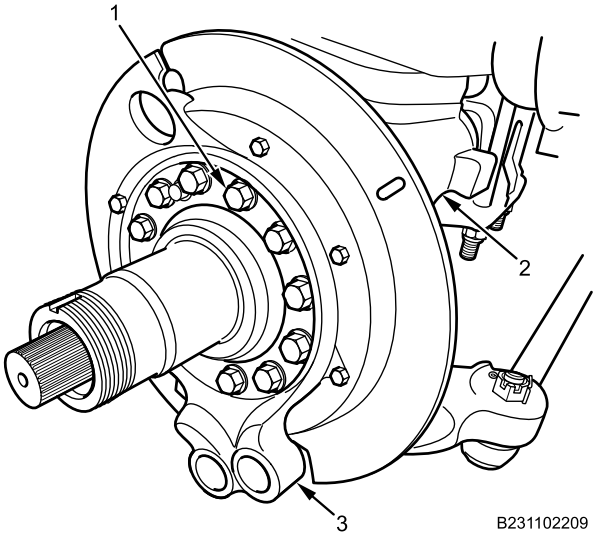

Figure 9. Front Brake Spider Assembly Installation.

2. Apply corrosion preventive compound on 12 front brake spider assembly bolt threads.
3. Install front brake spider assembly (Figure 9, Item 3) on knuckle (Figure 9, Item 2) with 12 bolts (Figure 9, Item 1) and 12 washers. Torque bolts to 180-230 lb-ft (244-312 N•m).

END OF TASK

FOLLOW-ON MAINTENANCE

1. Install front brake S-camshaft (WP 0488).
2. Install front ABS sensor (WP 0425).
3. Install front brake shoes (WP 0486).
4. Install front wheel hub (WP 0471).
5. Turn MAIN POWER switch on (TM 9-2355-106-10).
6. Start engine and allow air brake system pressure to build to normal range (TM 9-2355-106-10).
7. Checks for leaks (TM 9-2355-106-10).
8. Turn engine off (TM 9-2355-106-10).
9. Turn MAIN POWER switch off (TM 9-2355-106-10).
10. Remove wheel chocks (TM 9-2355-106-10).

END OF TASK

END OF WORK PACKAGE

FIELD MAINTENANCE

FRONT SLACK ADJUSTER ASSEMBLY REMOVAL AND INSTALLATION

INITIAL SETUP:

Tools and Special Tools
General Mechanic's Tool Kit (GMTK) (WP 0795, Item 37)
Grease gun (WP 0795, Item 41)
Dial indicator set (WP 0795, Item 27)
Snapring pliers (WP 0795, Item 92)

Materials/Parts
Grease (WP 0794, Item 21)
Clip - (2) (WP 0796, Item 106)
Washer - (2) (WP 0796, Item 42)

References
TM 9-2355-106-10
TM 9-2355-106-23P
WP 0782

Equipment Condition
Parking brake set (TM 9-2355-106-10)
Transmission set in NEUTRAL (N) (TM 9-2355-106-10)
Engine off (TM 9-2355-106-10)
MAIN POWER switch off (TM 9-2355-106-10)
Wheels chocked (TM 9-2355-106-10)
Air tanks drained (TM 9-2355-106-10)

WARNING

Air drain valves are under pressure. Wear protective goggles and do not place face in front of air drain valves while draining air reservoirs. Open air drain valves slowly to release air pressure gradually. Failure to comply may result in serious injury or death to personnel.

Do not disconnect any air line or fitting until system pressure has been relieved. Hoses may whip and injure personnel, and air under pressure can penetrate skin. Failure to comply may result in serious injury or death to personnel.

Do not operate vehicle with air pressure system loss. Vehicle has reduced or no braking capability and may not stop. Failure to comply may result in damage to equipment and serious injury or death to personnel.

Let air pressure build in both tanks to 100 psi (689 kPa) before releasing the parking brake. Low air pressure may affect vehicle braking capability. Failure to comply may result in injury or death to personnel.

FRONT SLACK ADJUSTER ASSEMBLY REMOVAL AND INSTALLATION - (CONTINUED)

NOTE

Left shown; right similar.

There are two types of slack adjusters: one with two clevis pins and one with one clevis pin.

REMOVAL OF SLACK ADJUSTER WITH TWO CLEVIS PINS

1. Remove small clevis pin (Figure 1, Item 4) and clip (Figure 1, Item 1) from slack adjuster assembly (Figure 1, Item 5). Discard clip.

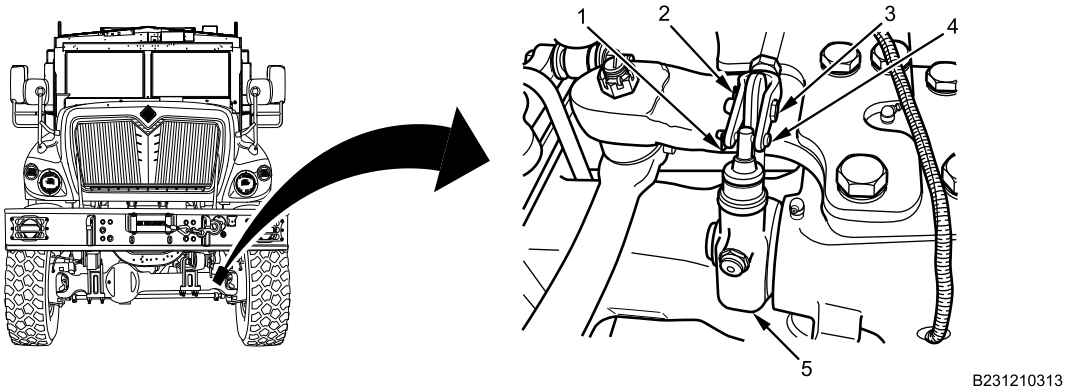

Figure 1. Two-Pin Slack Adjuster Removal.

2. Remove large clevis pin (Figure 1, Item 3) and clip (Figure 1, Item 2) from slack adjuster assembly (Figure 1, Item 5). Discard clip.
3. Remove snapring (Figure 2, Item 5) and washers from brake S-camshaft (Figure 2, Item 1).

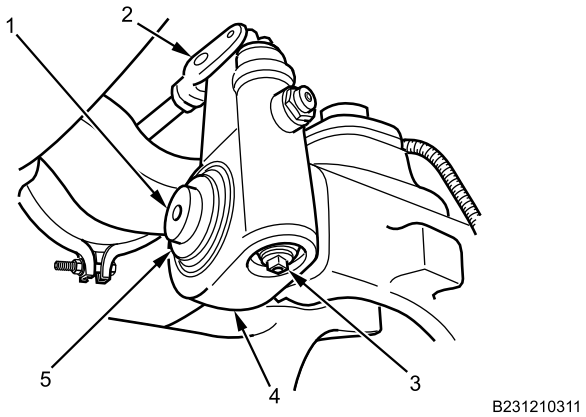

Figure 2. Snapring Removal.

4. Rotate manual adjusting nut (Figure 2, Item 3) counterclockwise until slack adjuster clears clevis rod (Figure 2, Item 2).
5. Remove slack adjuster assembly (Figure 2, Item 4) from brake S-camshaft (Figure 2, Item 1).

END OF TASK

FRONT SLACK ADJUSTER ASSEMBLY REMOVAL AND INSTALLATION - (CONTINUED)

REMOVAL OF SLACK ADJUSTER WITH ONE CLEVIS PIN

1. Remove clevis pin (Figure 3, Item 2) and clip (Figure 3, Item 1) from slack adjuster assembly (Figure 3, Item 3). Discard clip.

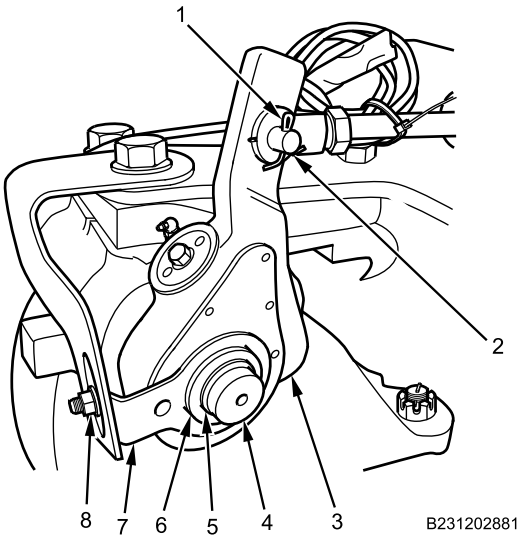

Figure 3. One-Pin Slack Adjuster Removal.

2. Remove snapring (Figure 3, Item 5) and washers (Figure 3, Item 6) from brake S-camshaft (Figure 3, Item 4).
3. Remove nut (Figure 3, Item 8) from slack adjuster control arm (Figure 3, Item 7).
4. Remove slack adjuster assembly (Figure 3, Item 3) from brake S-camshaft (Figure 3, Item 4).

END OF TASK

FRONT SLACK ADJUSTER ASSEMBLY REMOVAL AND INSTALLATION - (CONTINUED)

INSTALLATION OF SLACK ADJUSTER WITH TWO CLEVIS PINS

1. Install slack adjuster assembly (Figure 4, Item 5) and washers onto brake S-camshaft (Figure 4, Item 1) and secure with snapring (Figure 4, Item 6).

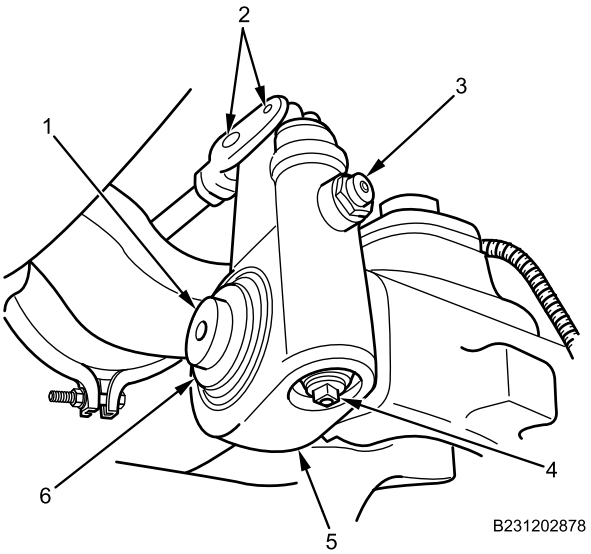

Figure 4. Two-Pin Slack Adjuster Installation.

2. Check end play between brake S-camshaft (Figure 4, Item 1) and slack adjuster assembly (Figure 4, Item 5) with dial indicator. Desired end play is 0.000-0.060 in. (0.00-1.5 mm).
3. If end play is not within specifications, remove snapring and install washers as necessary onto brake S-camshaft (Figure 4, Item 1). Secure slack adjuster assembly (Figure 4, Item 5) with snapring (Figure 4, Item 6). Repeat steps 2 and 3 as necessary.

CAUTION

Disengage pull pawl before rotating the manual adjusting nut, to avoid damage to the pull pawl teeth.

NOTE

Pull pawls are spring loaded. The pull pawl will re-engage automatically when released.

4. Disengage pull pawl (Figure 4, Item 3) by lifting up from slack adjuster (Figure 4, Item 5).

NOTE

Do not pull air chamber rod out to meet brake adjuster.

5. Rotate manual adjusting nut (Figure 4, Item 4) clockwise until clevis pin holes (Figure 4, Item 2) line up with slack adjuster clevis pin holes.
6. Install large clevis pin (Figure 5, Item 3) and new clip (Figure 5, Item 2) on slack adjuster assembly (Figure 5, Item 5).

FRONT SLACK ADJUSTER ASSEMBLY REMOVAL AND INSTALLATION - (CONTINUED)

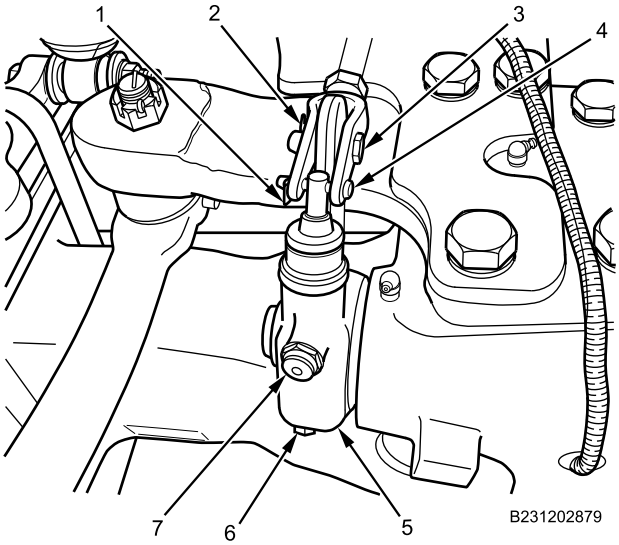

Figure 5. Clevis Pins Installation.

7. Install small clevis pin (Figure 5, Item 4) and new clip (Figure 5, Item 1) on slack adjuster assembly (Figure 5, Item 5).
8. Turn manual adjusting nut (Figure 5, Item 6) clockwise until brake shoes contact brake drum. Back off adjusting nut counterclockwise 1/2 turn from brake drum.
9. Grease slack adjuster grease fitting (Figure 6, Item 1).

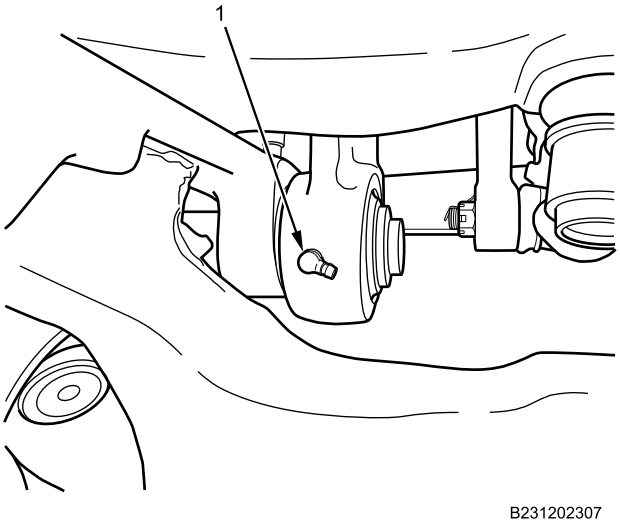

Figure 6. Grease Fitting.

END OF TASK

FRONT SLACK ADJUSTER ASSEMBLY REMOVAL AND INSTALLATION - (CONTINUED)

INSTALLATION OF SLACK ADJUSTER WITH ONE CLEVIS PIN

CAUTION

Do not use air tools on manual adjusting nut, as internal damage to slack adjuster will occur.

NOTE

Do not pull air chamber rod out to meet brake adjuster.

1. Install slack adjuster assembly (Figure 7, Item 4) onto brake S-camshaft (Figure 7, Item 5) and secure with snapring (Figure 7, Item 6).

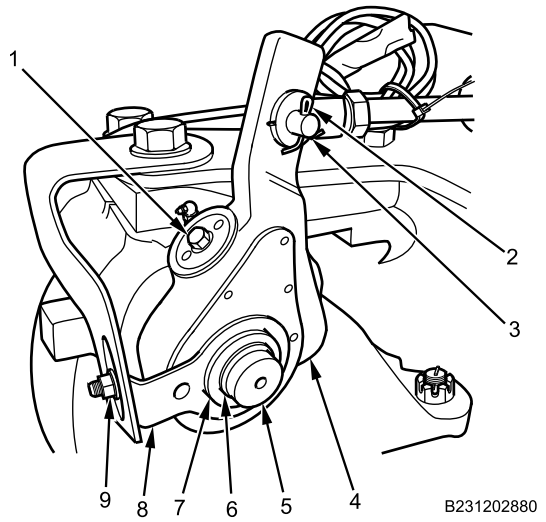

Figure 7. One-Pin Slack Adjuster Installation.

2. Check end play between brake S-camshaft (Figure 7, Item 5) and slack adjuster assembly (Figure 7, Item 4) with dial indicator. Desired end play is 0.000-0.060 in. (0.00-1.5 mm).
3. If end play is not within specifications, remove snapring and install washers (Figure 7, Item 7) as necessary onto brake S-camshaft (Figure 7, Item 5). Secure slack adjuster assembly (Figure 7, Item 4) with snapring (Figure 7, Item 6). Repeat steps 2 and 3 as necessary.
4. Rotate manual adjusting nut (Figure 7, Item 1) clockwise until clevis pin (Figure 7, Item 3) lines up with slack adjuster clevis pin hole.
5. Install clevis pin (Figure 7, Item 3) and new clip (Figure 7, Item 2) on slack adjuster assembly (Figure 7, Item 4).
6. Install nut (Figure 7, Item 9) on slack adjuster control arm (Figure 7, Item 8). Do not tighten.
7. Rotate control arm (Figure 7, Item 8) towards front axle until control arm comes to complete stop.
8. Tighten and secure control arm nut (Figure 7, Item 9).

NOTE

Minimum of 13 lb-ft (18 N•m) is necessary to overcome the internal clutch when turning manual adjusting nut counterclockwise. Ratcheting sound will occur when turning manual adjusting nut counterclockwise.

9. Turn adjusting nut clockwise until brake shoes contact brake drum. Back off adjusting nut counterclockwise 1/2 turn from brake drum.
10. Grease slack adjuster grease fitting (Figure 8, Item 1).

FRONT SLACK ADJUSTER ASSEMBLY REMOVAL AND INSTALLATION - (CONTINUED)

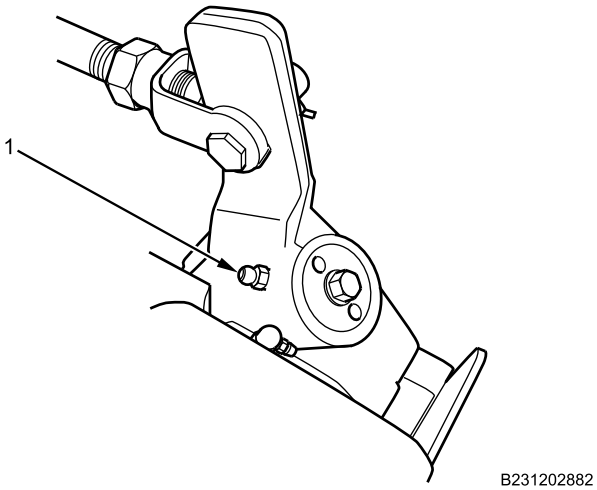

Figure 8. Grease Fitting.

END OF TASK

FOLLOW-ON MAINTENANCE

1. Adjust front brake shoes (WP 0484).
2. Turn MAIN POWER switch on (TM 9-2355-106-10).
3. Start engine and allow air brake system pressure to build to normal range (TM 9-2355-106-10).
4. Verify proper brake operation.
5. Check for leaks.
6. Turn engine off (TM 9-2355-106-10).
7. Turn MAIN POWER switch off (TM 9-2355-106-10).
8. Remove wheel chocks (TM 9-2355-106-10).

END OF TASK

END OF WORK PACKAGE

FIELD MAINTENANCE

REAR ANTILOCK BRAKE SYSTEM (ABS) SENSOR REMOVAL AND INSTALLATION

INITIAL SETUP:

Tools and Special Tools
General Mechanic's Tool Kit (GMTK) (WP 0795, Item 37)

Materials/Parts
Cleaner (WP 0794, Item 9)
Grease (WP 0794, Item 23)
Grease (WP 0794, Item 22)
ABS sensor clip (WP 0796, Item 2)
Cable lock strap - (4) (WP 0796, Item 124)

References
TM 9-2355-106-10
TM 9-2355-106-23P
WP 0782

Equipment Condition
Parking brake set (TM 9-2355-106-10)
Transmission set in NEUTRAL (N) (TM 9-2355-106-10)
Engine off (TM 9-2355-106-10)
MAIN POWER switch off (TM 9-2355-106-10)
Wheels chocked (TM 9-2355-106-10)
Rear wheel and tire removed (WP 0530)
Rear brake drum and hub removed (WP 0494)

NOTE

Note routing of ABS harness cable and location of cable lock straps prior to removal to aid in installation.

Right side shown, left side similar.

REMOVAL

1. Disconnect ABS electrical sensor connector (Figure 1, Item 2) from wiring harness (Figure 1, Item 1).

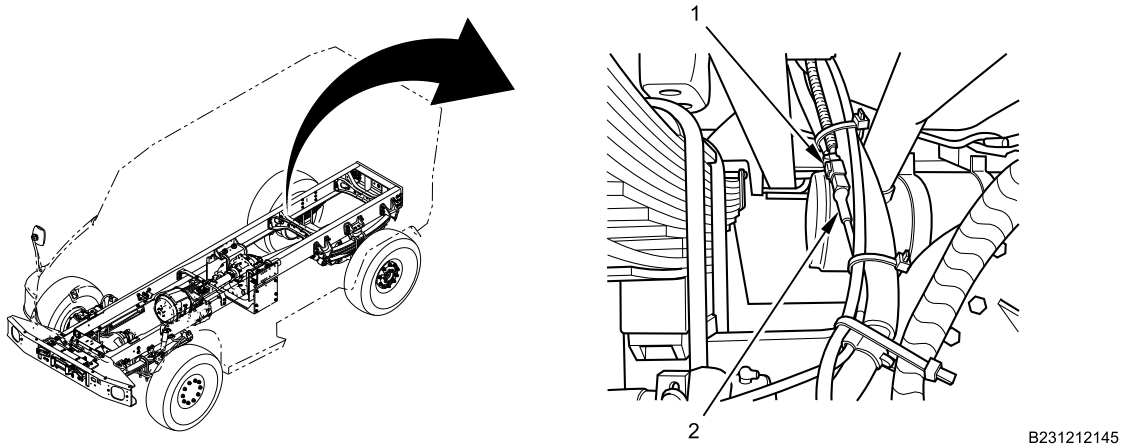

Figure 1. ABS Electrical Connector.

REAR ANTILOCK BRAKE SYSTEM (ABS) SENSOR REMOVAL AND INSTALLATION - (CONTINUED)

NOTE

Do not strike sensor when removing from housing block.

2. Remove cable lock straps (Figure 2, Item 3) as necessary. Discard cable lock straps.

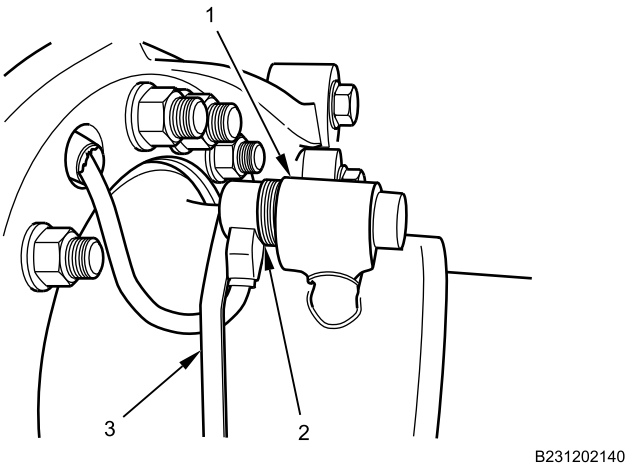

Figure 2. ABS Sensor.

3. Remove ABS sensor (Figure 2, Item 2) from housing block (Figure 2, Item 1).
4. Remove ABS sensor clip from housing block (Figure 2, Item 1). Discard sensor clip.
5. Hold brake chamber band clamp nut (Figure 3, Item 2) and remove ABS sensor wire bracket nut (Figure 3, Item 3).

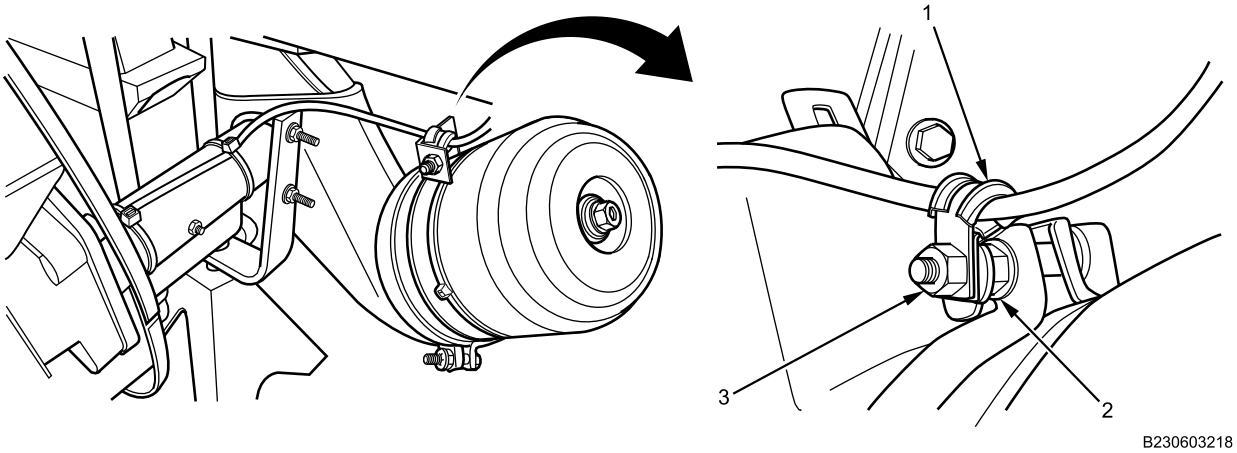

Figure 3. ABS Sensor Wire Bracket Nut.

6. Remove ABS sensor wire bracket (Figure 3, Item 1) from brake chamber.

END OF TASK

REAR ANTILOCK BRAKE SYSTEM (ABS) SENSOR REMOVAL AND INSTALLATION - (CONTINUED)

INSTALLATION

WARNING

Silicone grease is harmful to skin and eyes. If silicone grease contacts eyes, rinse thoroughly and contact physician if irritation persists. If skin is contacted, wash thoroughly with soap and water. Failure to comply may result in serious injury to personnel.

1. Clean and dry ABS sensor housing block (Figure 4, Item 1).

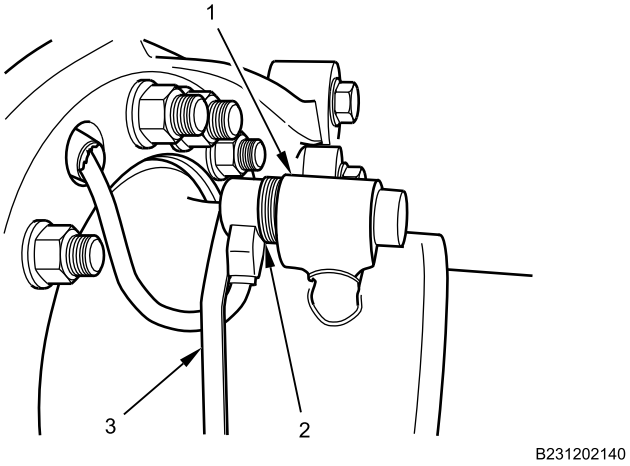

Figure 4. ABS Sensor.

2. Apply silicone grease on ABS sensor (Figure 4, Item 2), ABS new sensor clip, and in housing block (Figure 4, Item 1).
3. Install ABS sensor clip into housing block (Figure 4, Item 1), with retaining tabs toward inside of housing block.

NOTE

ABS sensor will self-adjust during first wheel rotation with hub and brake drum installed.

4. Install ABS sensor (Figure 4, Item 2) flush against inside surface of housing block (Figure 4, Item 1).
5. Install new cable lock straps (Figure 4, Item 3).

REAR ANTILOCK BRAKE SYSTEM (ABS) SENSOR REMOVAL AND INSTALLATION - (CONTINUED)

6. Install nut (Figure 5, Item 4) securing ABS sensor wire retaining bracket (Figure 5, Item 3) to brake chamber.

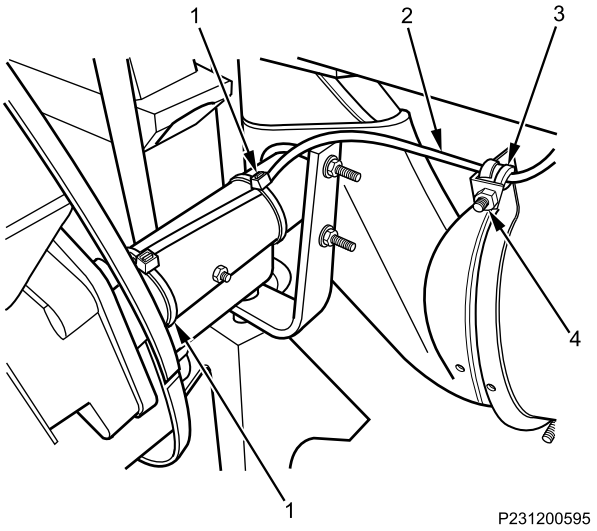

Figure 5. ABS Sensor Wire Bracket.

7. Install new cable lock straps (Figure 5, Item 1) to secure ABS wire (Figure 5, Item 2).

WARNING

Dielectric grease is harmful to skin and eyes. If grease contacts eyes, rinse thoroughly and contact physician if irritation persists. If skin is contacted, wash thoroughly with soap and water. Failure to comply may result in serious injury to personnel.

REAR ANTILOCK BRAKE SYSTEM (ABS) SENSOR REMOVAL AND INSTALLATION - (CONTINUED)

8. Apply dielectric grease in ABS electrical sensor connector (Figure 6, Item 2) and connect onto wiring harness (Figure 6, Item 1).

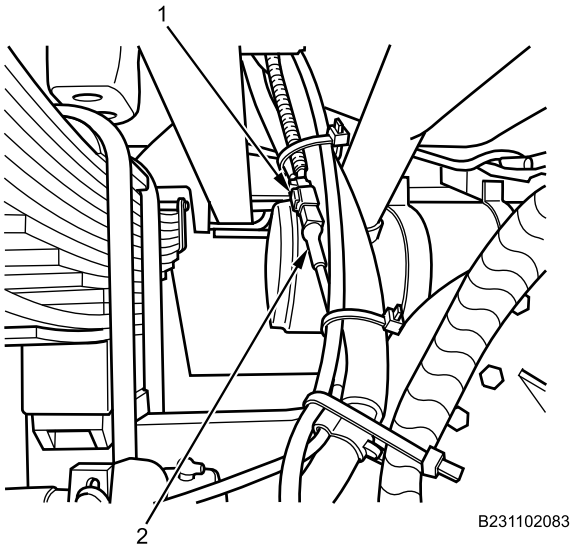

Figure 6. ABS Electrical Connector.

END OF TASK

FOLLOW-ON MAINTENANCE

1. Install rear brake drum and hub (WP 0494).
2. Install rear wheel and tire (WP 0530).
3. Turn MAIN POWER switch on (TM 9-2355-106-10).
4. Start engine and allow air brake system pressure to build to normal range (TM 9-2355-106-10).
5. Remove wheel chocks (TM 9-2355-106-10).
6. Test drive to verify proper brake operation (TM 9-2355-106-10).
7. Set parking brake (TM 9-2355-106-10).
8. Set transmission set in NEUTRAL (N) (TM 9-2355-106-10).
9. Turn engine off (TM 9-2355-106-10).
10. Turn MAIN POWER switch off (TM 9-2355-106-10).

END OF TASK

END OF WORK PACKAGE

FIELD MAINTENANCE

REAR BRAKE DUST SHIELD REMOVAL AND INSTALLATION

INITIAL SETUP:

Tools and Special Tools
General Mechanic's Tool Kit (GMTK) (WP 0795, Item 37)

Materials/Parts
Bolt - (6) (WP 0796, Item 163)
Compound (WP 0794, Item 13)
Faceshield, industrial (WP 0794, Item 16)
Gloves (WP 0794, Item 18)
Goggles, industrial (WP 0794, Item 20)

References
TM 9-2355-106-10
TM 9-2355-106-23P
WP 0782

Equipment Condition
Parking brake set (TM 9-2355-106-10)
Transmission set in NEUTRAL (N) (TM 9-2355-106-10)
Engine off (TM 9-2355-106-10)
MAIN POWER switch off (TM 9-2355-106-10)
Wheels chocked (TM 9-2355-106-10)

NOTE

Right shown; left similar.

REMOVAL

1. Remove six bolts (Figure 1, Item 1), upper dust shield (Figure 1, Item 2), and lower dust shield (Figure 1, Item 3) from brake spider assembly (Figure 1, Item 4). Discard bolts.

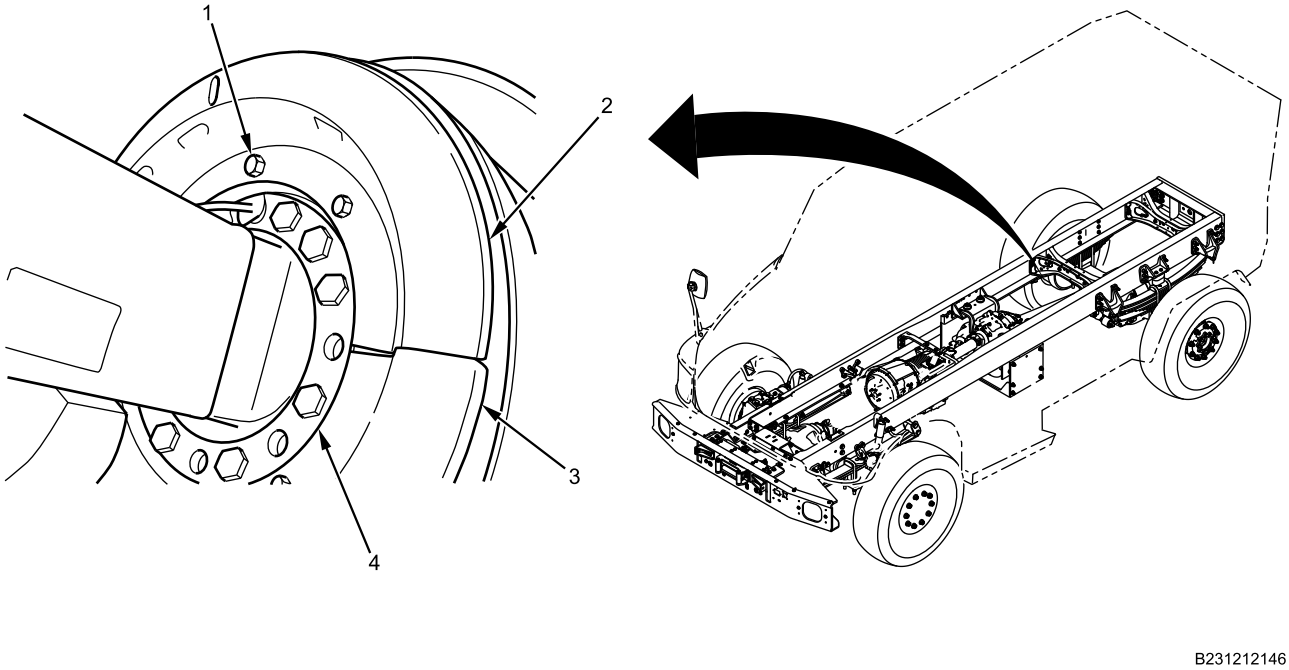

Figure 1. Dust Shield.

END OF TASK

REAR BRAKE DUST SHIELD REMOVAL AND INSTALLATION - (CONTINUED)

INSTALLATION

WARNING

Corrosion preventive compound is toxic. Use only in well-ventilated area. Use approved respirator with dual organic vapor/mist and particulate cartridge. Do not get in eyes; wear chemical safety goggles and full-face shield when using. Avoid contact with skin and wear rubber or plastic, solvent-resistant gloves. In case of contact, remove contaminated clothing and immediately wash area with soap and water. If compound contacts eyes, flush eyes with large amounts of water for at least 15 minutes and get immediate medical attention. If swallowed, do not induce vomiting; contact a physician immediately. Failure to comply may result in serious injury or death to personnel.

1. Apply corrosion preventive compound on six new dust shield bolt threads.

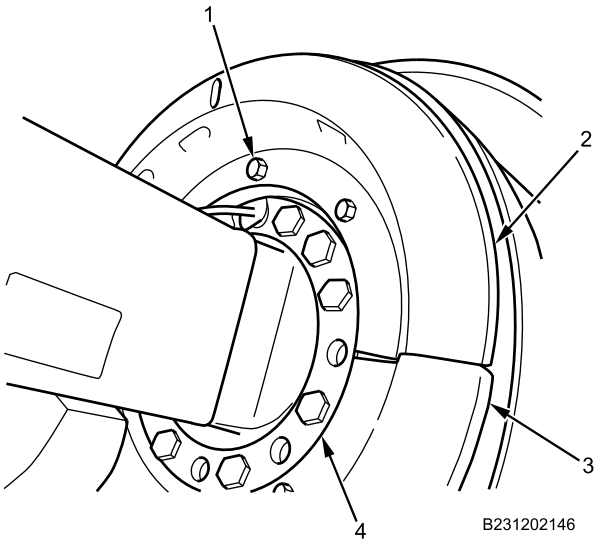

Figure 2. Dust Shield.

2. Install lower dust shield (Figure 2, Item 3) and upper dust shield (Figure 2, Item 2) on brake spider assembly (Figure 2, Item 4) with six bolts (Figure 2, Item 1). Tighten securely.

END OF TASK

FOLLOW-ON MAINTENANCE

1. Remove wheel chocks (TM 9-2355-106-10).

END OF TASK

END OF WORK PACKAGE

FIELD MAINTENANCE

REAR BRAKE SHOES REMOVAL AND INSTALLATION

INITIAL SETUP:

Tools and Special Tools
General Mechanic's Tool Kit (GMTK) (WP 0795, Item 37)

Materials/Parts
Brake spring (WP 0796, Item 108)
Brake spring - (2) (WP 0796, Item 107)
Cleaner (WP 0794, Item 9)
Gloves (WP 0794, Item 18)
Grease (WP 0794, Item 23)

References
TM 9-2355-106-10
TM 9-2355-106-23P
WP 0782

Equipment Condition
Parking brake set (TM 9-2355-106-10)
Transmission set in NEUTRAL (N) (TM 9-2355-106-10)
Engine off (TM 9-2355-106-10)
MAIN POWER switch off (TM 9-2355-106-10)
Wheels chocked (TM 9-2355-106-10)
Air tanks drained (TM 9-2355-106-10)
Rear brakes caged (TM 9-2355-106-10)
Rear wheel and tire removed (WP 0530)
Rear axle shaft removed (WP 0482)
Brake shoes retracted (WP 0484)
Rear brake drum and hub assembly removed (WP 0494)

WARNING

Before working on air brake system or any auxiliary pressurized system, make sure air pressure has been drained from all reservoirs. Failure to comply may result in serious injury or death to personnel.

Do not allow grease or oil to contact brake linings. Linings can absorb grease and oil, causing early glazing and reduced braking action. Failure to comply may result in serious injury or death to personnel.

NOTE

Left shown; right similar.

Use brake cleaner to clean brake parts before removal and after installation.

Note location and orientation of brake shoes and springs to aid installation.

It may be necessary to use a pry bar or similar tool to move brake shoes during removal steps.

REAR BRAKE SHOES REMOVAL AND INSTALLATION - (CONTINUED)

REMOVAL

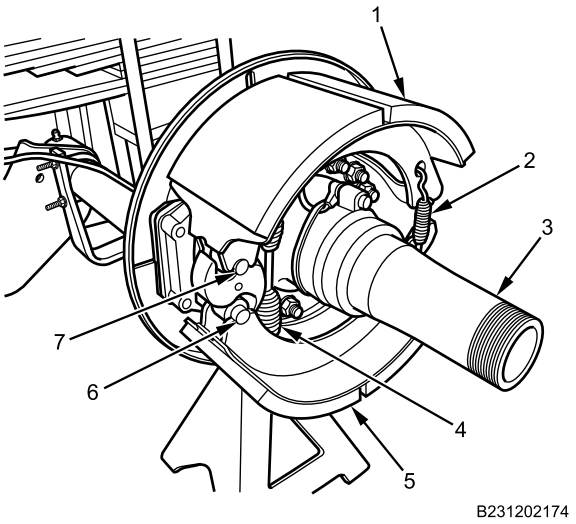

Figure 1. Rear Brake Shoes.

1. Lift up on upper brake shoe (Figure 1, Item 1), and remove roller (Figure 1, Item 7) and roller retainer from brake S-camshaft.
2. Push down on lower brake shoe (Figure 1, Item 5), and remove cam roller (Figure 1, Item 6) and cam roller clip from brake S-camshaft.
3. Remove retainer spring (Figure 1, Item 4) and discard.
4. Spread upper brake shoe (Figure 1, Item 1) and lower brake shoe (Figure 1, Item 5) away from axle (Figure 1, Item 3) and remove brake shoe assembly (Figure 1, Item 1, 2, and 5) from rear axle.
5. Remove two return springs (Figure 1, Item 2) (one not shown) from upper (Figure 1, Item 1) and lower brake shoes (Figure 1, Item 5). Discard retaining springs.

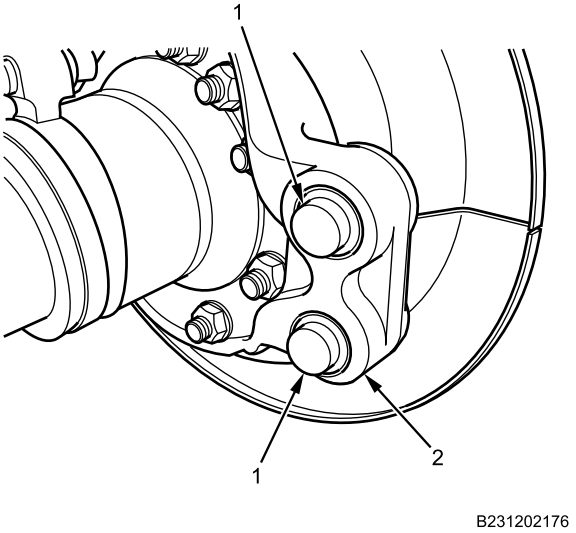

Figure 2. Anchor Pin.

6. Remove two anchor pins (Figure 2, Item 1) from brake spider (Figure 2, Item 2).

END OF TASK

REAR BRAKE SHOES REMOVAL AND INSTALLATION - (CONTINUED)

INSTALLATION

WARNING

Silicone grease is harmful to skin and eyes. If silicone grease contacts eyes, rinse thoroughly and contact physician if irritation persists. If skin is contacted, wash thoroughly with soap and water. Failure to comply may result in serious injury to personnel.

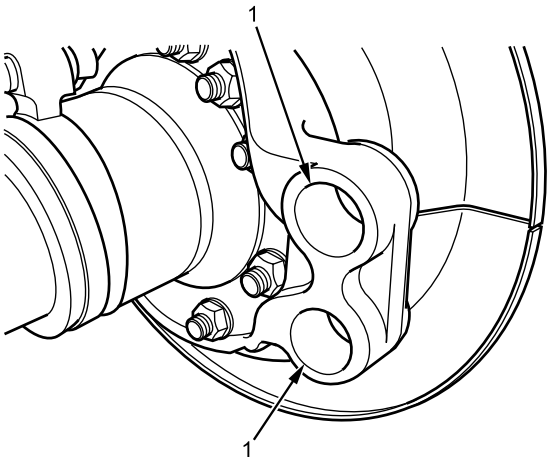

B231202177

Figure 3. Spider Assembly.

1. Apply silicone grease inside two anchor pin bushings (Figure 3, Item 1).

REAR BRAKE SHOES REMOVAL AND INSTALLATION - (CONTINUED)

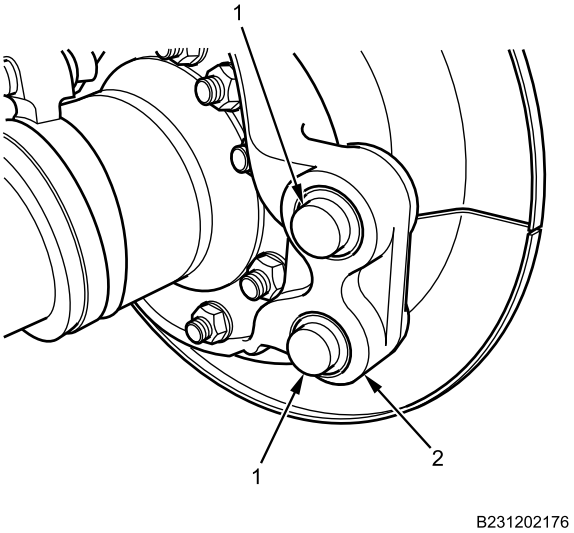

Figure 4. Anchor Pin.

2. Install two anchor pins (Figure 4, Item 1) into brake spider (Figure 4, Item 2).

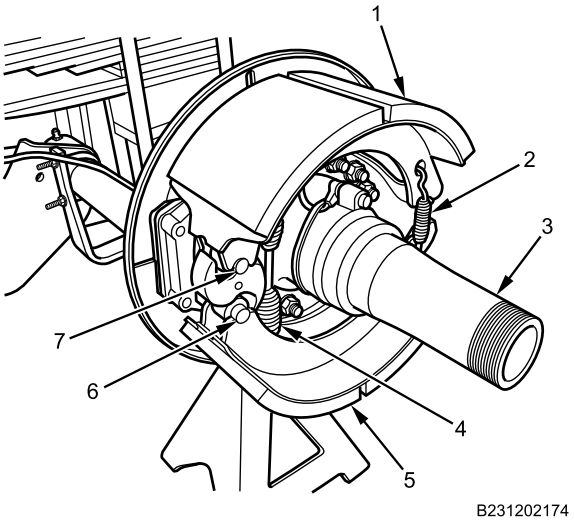

Figure 5. Brake Shoes.

NOTE

Do not apply silicone grease where rollers contact brake S-camshaft.

3. Apply silicone grease only where brake shoes contact rollers (Figure 5, Item 6 and 7).
4. Position two new return springs (Figure 5, Item 2) on upper (Figure 5, Item 1) and lower brake shoes (Figure 5, Item 5) in position and orientation noted during removal.
5. Position brake shoe assembly (Figure 5, Item 1, 2, and 5) on rear axle (Figure 5, Item 3) in position noted during removal.
6. Install new retaining spring (Figure 5, Item 4) in position and orientation noted during removal.

REAR BRAKE SHOES REMOVAL AND INSTALLATION - (CONTINUED)

NOTE

It may be necessary to use a pry bar or similar tool to move brake shoes during next two steps.

7. Lift upper brake shoe (Figure 5, Item 1), and install roller (Figure 5, Item 7) and roller retainer on brake S-camshaft.
8. Push down on lower brake shoe (Figure 5, Item 5), and install cam roller (Figure 5, Item 6) and roller cam clip on brake S-camshaft.

END OF TASK

FOLLOW-ON MAINTENANCE

1. Install rear brake drum and hub assembly (WP 0494).
2. Install rear axle (WP 0482).
3. Adjust brake shoes (WP 0484).
4. Un-cage rear brakes (TM 9-2355-106-10).
5. Install rear wheel and tire (WP 0530).
6. Turn MAIN POWER switch on (TM 9-2355-106-10).
7. Start engine and allow air brake system pressure to build to normal range (TM 9-2355-106-10).
8. Checks for leaks (TM 9-2355-106-10).
9. Turn engine off (TM 9-2355-106-10).
10. Turn MAIN POWER switch off (TM 9-2355-106-10).
11. Remove wheel chocks (TM 9-2355-106-10).

END OF TASK

END OF WORK PACKAGE

FIELD MAINTENANCE

REAR BRAKE DRUM AND HUB ASSEMBLY REMOVAL AND INSTALLATION

INITIAL SETUP:

Tools and Special Tools
General Mechanic's Tool Kit (GMTK) (WP 0795, Item 37)
Socket, bearing locknut, 6 pt, 4-inch (WP 0795, Item 96)
Socket, socket wrench, 3/4-inch drive, 12 pt, 15/16-inch (WP 0795, Item 107)
Extension, 8-inch, 3/4-inch drive, chrome (WP 0795, Item 32)
Extension, 3-inch OAL, 3/4-inch drive, chrome (WP 0795, Item 31)
Adapter, socket, wrench drive, 3/4-inch male - 1/2-inch female (WP 0795, Item 5)
Wrench, torque, 50-250 lb-ft, 1/2-inch drive (WP 0795, Item 143)
Wrench, torque, 90-600 lb-ft, 3/4-inch drive (WP 0795, Item 144)
Pan, drain, 5-gal. capacity (WP 0795, Item 75)

Materials/Parts
Lubricating oil (WP 0794, Item 29)
Sealing compound (WP 0794, Item 45)

Personnel Required
Maintainer - (2)

References
TM 9-2355-106-10
TM 9-2355-106-23P
WP 0782

Equipment Condition
Parking brake set (TM 9-2355-106-10)
Transmission set to neutral (N) (TM 9-2355-106-10)
Engine off (TM 9-2355-106-10)
MAIN POWER switch off (TM 9-2355-106-10)
Wheels chocked (TM 9-2355-106-10)
Rear brakes caged (TM 9-2355-106-10)
Rear wheel and tire removed (WP 0530)
Rear axle shaft removed (WP 0482)
Brake shoes retracted (WP 0484)

REAR BRAKE DRUM AND HUB ASSEMBLY REMOVAL AND INSTALLATION - (CONTINUED)

REMOVAL

NOTE

Left side shown; right side similar.

1. Position drain pan under hub assembly.

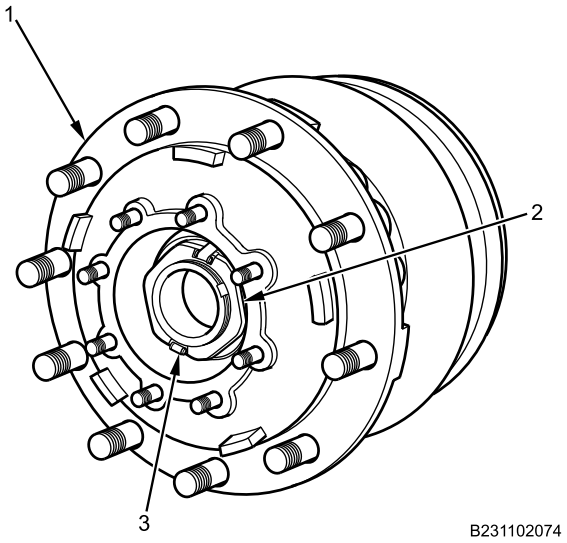

Figure 1. Rear Brake Drum and Hub Assembly.

REAR BRAKE DRUM AND HUB ASSEMBLY REMOVAL AND INSTALLATION - (CONTINUED)

NOTE

Spring clips will automatically release when socket is installed.

2. Using 4-inch socket, release spring clips (Figure 1, Item 3) and remove retaining nut (Figure 1, Item 2) and outer bearing from (Figure 1, Item 1) rear brake drum and hub assembly.
3. With assistant assist remove rear brake drum and hub assembly (Figure 1, Item 1) from rear axle assembly.
4. Remove 10 bolts (Figure 2, Item 2), 10 washers, and rear brake drum (Figure 2, Item 1) from hub assembly.

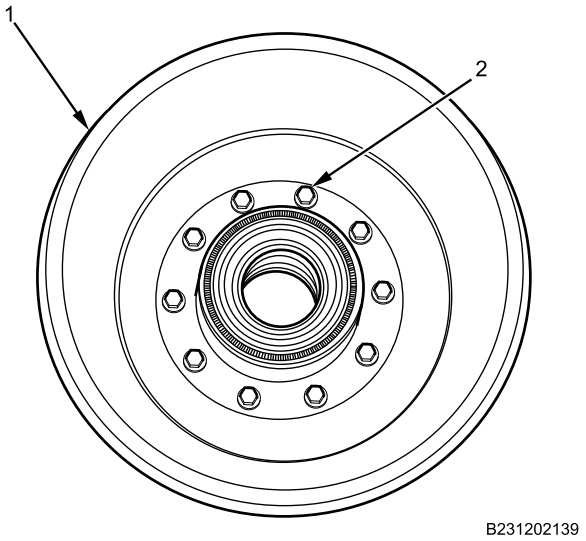

Figure 2. Rear Brake Drum.

END OF TASK

REAR BRAKE DRUM AND HUB ASSEMBLY REMOVAL AND INSTALLATION - (CONTINUED)

DISASSEMBLY

1. Remove ABS ring (Figure 3, Item 1) from rear hub assembly (Figure 3, Item 2).

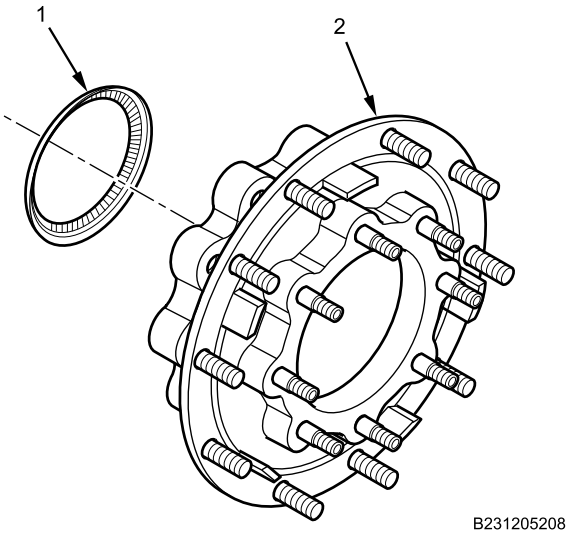

Figure 3. Antilock Brake System (ABS) Ring.

END OF TASK

ASSEMBLY

1. Install ABS ring (Figure 4, Item 1) on rear hub assembly (Figure 4, Item 2).

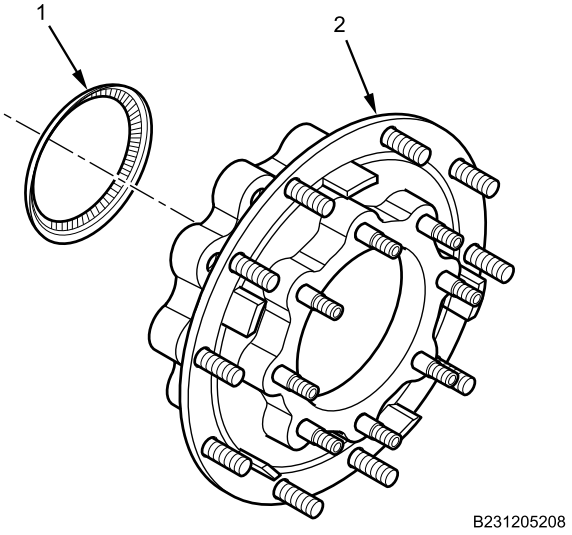

Figure 4. ABS Ring.

END OF TASK

REAR BRAKE DRUM AND HUB ASSEMBLY REMOVAL AND INSTALLATION - (CONTINUED)

INSTALLATION

WARNING

Thread sealing compound is harmful to skin and eyes. If thread sealing compound contacts eyes, rinse thoroughly and contact physician if irritation persists. If skin is contacted, wash thoroughly with soap and water. Failure to comply may result in serious injury to personnel.

1. Apply threadlocker sealing compound on 10 rear brake drum bolt threads.

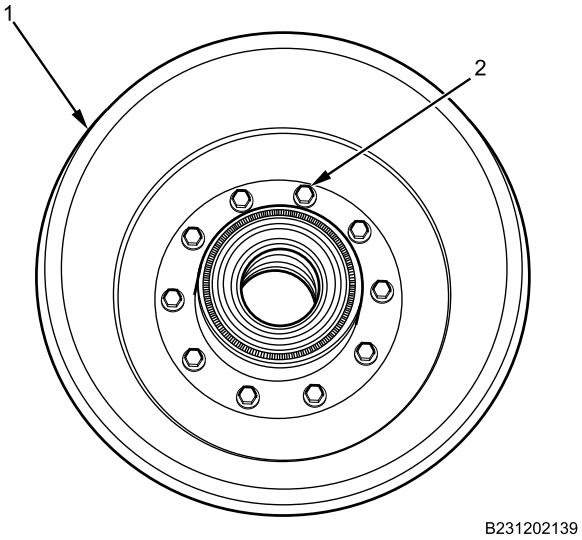

Figure 5. Rear Brake Drum.

2. Install rear brake drum (Figure 5, Item 1) on hub assembly with 10 washers and 10 bolts (Figure 5, Item 2). Tighten all bolts securely.

REAR BRAKE DRUM AND HUB ASSEMBLY REMOVAL AND INSTALLATION - (CONTINUED)

3. With assistant, install rear brake drum and hub assembly (Figure 6, Item 1) and outer bearing on rear axle assembly with retaining nut (Figure 6, Item 2). Using 4-inch socket, torque nut to 200 lb-ft (271 N•m) while spinning rear brake drum and hub assembly by hand.

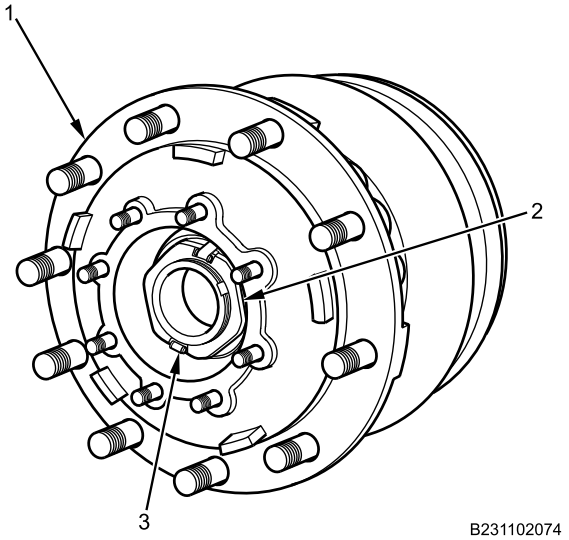

Figure 6. Rear Brake Drum and Hub Assembly.

4. Back off retaining nut (Figure 6, Item 2) and retorque to 50 lb-ft (68 N•m), then back off one-eighth turn. Spring clips (Figure 6, Item 3) should be locked in place. If not, slowly back off until spring clips lock.
5. Remove drain pan.

END OF TASK

FOLLOW-ON MAINTENANCE

1. Install rear axle shaft (WP 0482).
2. Uncage rear brakes (TM 9-2355-106-10).
3. Adjust brake shoes (WP 0484).
4. Install rear wheel and tire (WP 0530).
5. Fill hub assembly and check gear oil level (WP 0481).
6. Remove wheel chocks (TM 9-2355-106-10).
7. Drive vehicle to verify brake operation (TM 9-2355-106-10).
8. Turn engine off (TM 9-2355-106-10).
9. Turn MAIN POWER switch off (TM 9-2355-106-10).

END OF TASK

END OF WORK PACKAGE

FIELD MAINTENANCE

BRAKE S-CAMSHAFT REMOVAL AND INSTALLATION

INITIAL SETUP:

Tools and Special Tools
General Mechanic's Tool Kit (GMTK) (WP 0795, Item 37)
Grease gun (WP 0795, Item 41)
Dial indicator set (WP 0795, Item 27)
Snapring Pliers Tool Kit (WP 0795, Item 92)

Materials/Parts
Grease (WP 0794, Item 21)
Washer - (2) (WP 0796, Item 42)

References
TM 9-2355-106-10
TM 9-2355-106-23P
WP 0782

Equipment Condition
Parking brake set (TM 9-2355-106-10)
Transmission set in NEUTRAL (N) (TM 9-2355-106-10)
Engine off (TM 9-2355-106-10)
MAIN POWER switch off (TM 9-2355-106-10)
Wheels chocked (TM 9-2355-106-10)
Air tanks drained (TM 9-2355-106-10)
Rear wheel and tire removed (WP 0530)
Rear brakes caged (TM 9-2355-106-10)
Rear brake drum and hub assembly removed (WP 0494)
Rear brake shoes removed (WP 0493)

NOTE

Left side shown; right side similar.

REMOVAL

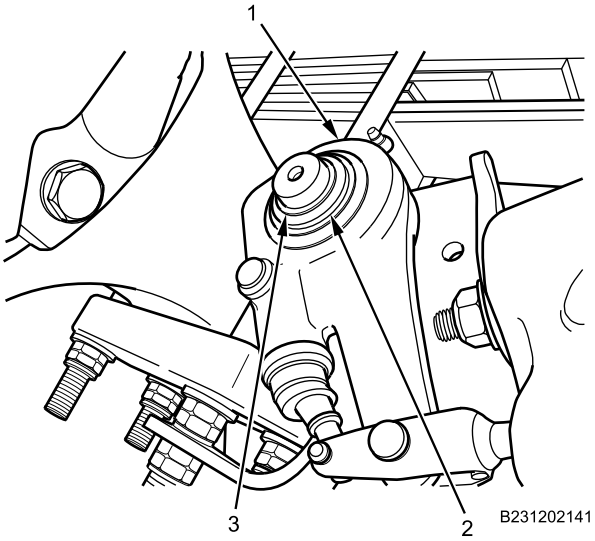

Figure 1. Snapring Removal.

NOTE

Note location and number of washers for installation.

1. Remove snapring (Figure 1, Item 3) and washers (Figure 1, Item 2) from slack adjuster assembly (Figure 1, Item 1).
2. Remove slack adjuster assembly (Figure 1, Item 1) from brake S-camshaft.

BRAKE S-CAMSHAFT REMOVAL AND INSTALLATION - (CONTINUED)

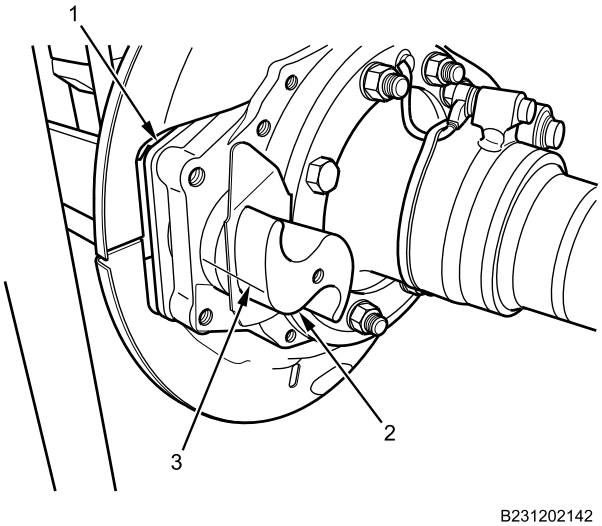

Figure 2. Rear Brake S-Camshaft.

3. Scribe horizontal line (Figure 2, Item 3) on brake S-camshaft (Figure 2, Item 2) and spider assembly (Figure 2, Item 1).
4. Remove rear brake S-camshaft (Figure 2, Item 2), plate, and washer from slack adjuster assembly, rear brake S-camshaft tube, and spider assembly (Figure 2, Item 1).

END OF TASK

INSTALLATION

1. Install rear brake S-camshaft (Figure 2, Item 2) and plate into spider assembly (Figure 2, Item 1) and rear brake S-camshaft tube, and align scribed horizontal line (Figure 2, Item 3).

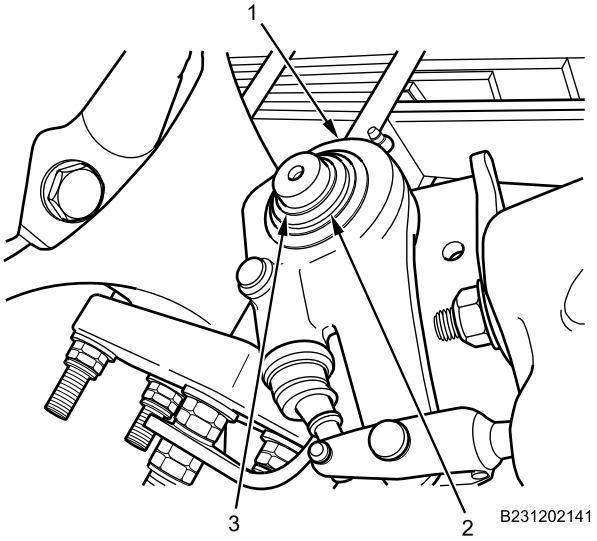

Figure 3. Snapring Installation.

2. Install washer on brake S-camshaft in between rear brake S-camshaft tube and slack adjuster assembly (Figure 3, Item 1).
3. Install slack adjuster assembly (Figure 3, Item 1) onto rear brake S-camshaft and secure with snapring (Figure 3, Item 3).

BRAKE S-CAMSHAFT REMOVAL AND INSTALLATION - (CONTINUED)

4. Check end play between rear brake S-camshaft and slack adjuster assembly (Figure 3, Item 1) with dial indicator. Desired end play is 0.000-0.060 in. (0.00-1.5 mm).
5. Remove snapring (Figure 3, Item 3) and install washers (Figure 3, Item 2) as necessary onto slack adjuster assembly (Figure 3, Item 1). Secure rear brake S-camshaft with snapring.

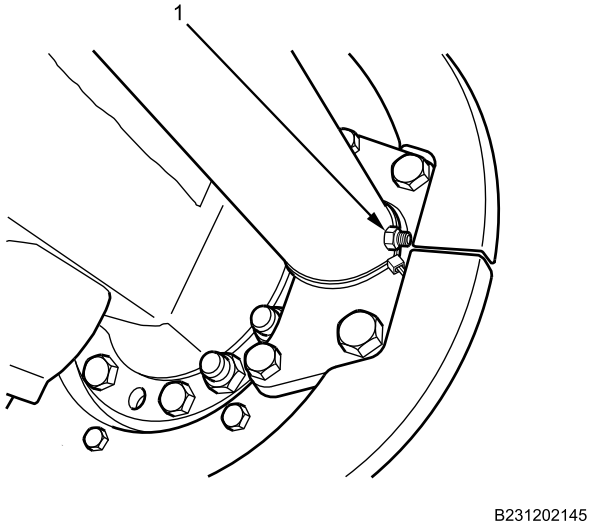

Figure 4. Grease Fitting.

6. Grease rear brake S-camshaft tube grease fitting (Figure 4, Item 1).
7. Clean excess grease from around end of S-camshaft.

END OF TASK

FOLLOW-ON MAINTENANCE

1. Install rear brake shoes (WP 0493).
2. Install rear brake drum and hub assembly (WP 0494).
3. Adjust rear brake shoes (WP 0484).
4. Install rear axle (WP 0482).
5. Uncage rear brakes (WP 0484).
6. Install rear wheel and tire (WP 0530).
7. Turn MAIN POWER switch on (TM 9-2355-106-10).
8. Start engine and allow air brake system pressure to build to normal range (TM 9-2355-106-10).
9. Check for leaks.
10. Turn engine off (TM 9-2355-106-10).
11. Turn MAIN POWER switch off (TM 9-2355-106-10).
12. Remove wheel chocks (TM 9-2355-106-10).

END OF TASK

END OF WORK PACKAGE

FIELD MAINTENANCE

REAR BRAKE SPIDER ASSEMBLY REMOVAL AND INSTALLATION

INITIAL SETUP:

Tools and Special Tools
General Mechanic's Tool Kit (GMTK) (WP 0796, Item 37)
Seal Driver Tool Kit, Arvin-Meritor No. 4454 (WP 0796, Item 38)
Puller set, mechanical (WP 0796, Item 78)
Wrench, torque, 90-600 lb-ft, 3/4-inch drive (WP 0796, Item 144)

Materials/Parts
Compound (WP 0794, Item 13)
Bushing (WP 0796, Item 39)
Bushing - (2) (WP 0796, Item 38)
Seal - (2) (WP 0796, Item 115)

References
TM 9-2355-106-10
TM 9-2355-106-23P
WP 0782

Equipment Condition
Parking brake set (TM 9-2355-106-10)
Transmission set in NEUTRAL (N) (TM 9-2355-106-10)
Engine off (TM 9-2355-106-10)
MAIN POWER switch off (TM 9-2355-106-10)
Wheels chocked (TM 9-2355-106-10)
Rear wheel and tire removed WP 0530
Air tanks drained (TM 9-2355-106-10)
Rear brakes caged (TM 9-2355-106-10)
Rear brake drum and hub assembly removed (WP 0494)
Rear brake shoes removed (WP 0493)
Rear brake S-camshaft removed (WP 0495)
Rear Antilock Brake System (ABS) sensor removed (WP 0491)

REMOVAL

NOTE

Left side shown; right side similar.

Note orientation of bolts for installation.

1. Remove 10 nuts (Figure 1, Item 1), 10 washers, 10 bolts , and rear brake spider assembly (Figure 1, Item 2) from rear axle assembly (Figure 1, Item 3).

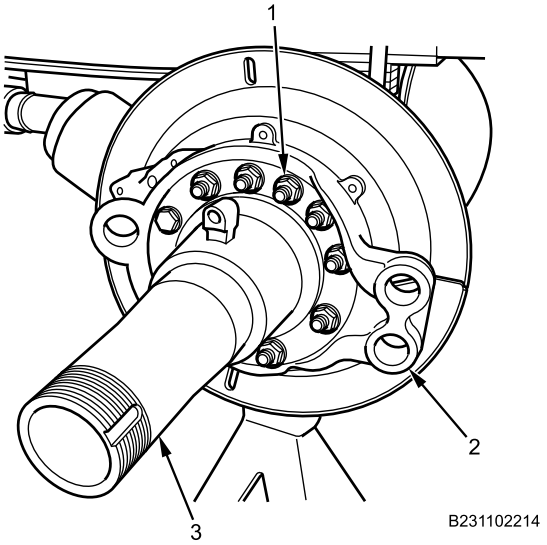

Figure 1. Rear Brake Spider Assembly.

END OF TASK

REAR BRAKE SPIDER ASSEMBLY REMOVAL AND INSTALLATION - (CONTINUED)

DISASSEMBLY

1. Using seal removal tool, remove two camshaft seals (Figure 2, Item 1 and 4) from rear brake spider assembly (Figure 2, Item 3). Discard seals.

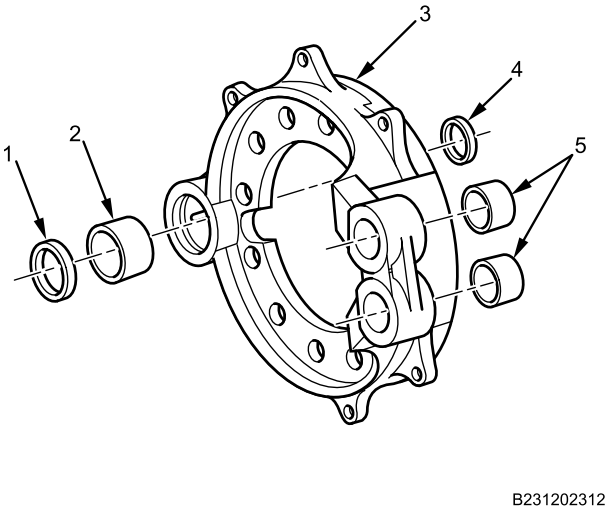

Figure 2. Remove Seals and Bushings.

2. Using bushing puller tool, remove two anchor pin bushings (Figure 2, Item 5) and camshaft bushing (Figure 2, Item 2) from rear brake spider assembly (Figure 2, Item 3). Discard bushings.

END OF TASK

ASSEMBLY

1. Using seal driver tool, install two new anchor pin bushings (Figure 3, Item 5) and new camshaft bushing (Figure 3, Item 2) into rear brake spider assembly (Figure 3, Item 3).

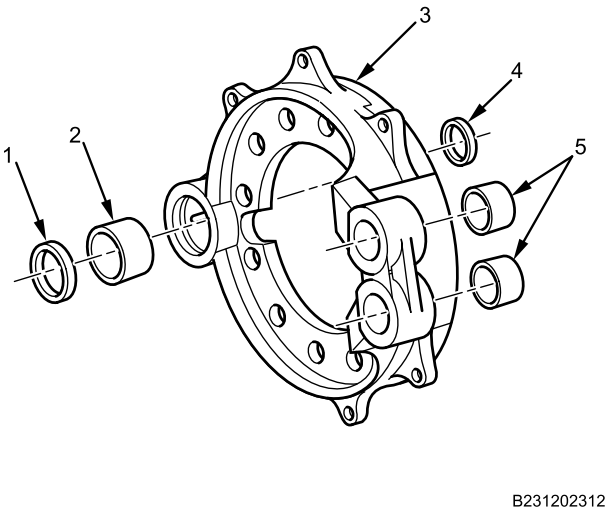

Figure 3. Install Seals and Bushings.

REAR BRAKE SPIDER ASSEMBLY REMOVAL AND INSTALLATION - (CONTINUED)

2. Using seal driver tool, install two new camshaft seals (Figure 3, Item 1 and 4) into rear brake spider assembly (Figure 3, Item 3).

END OF TASK

INSTALLATION

WARNING

Corrosion preventive compound is toxic. Use only in well-ventilated area. Use approved respirator with dual organic vapor/mist and particulate cartridge. Do not get in eyes; wear chemical safety goggles and full-face shield when using. Avoid contact with skin and wear rubber or plastic, solvent-resistant gloves. In case of contact, remove contaminated clothing and immediately wash area with soap and water. If compound contacts eyes, flush eyes with large amounts of water for at least 15 minutes and get immediate medical attention. If swallowed, do not induce vomiting; contact a physician immediately. Failure to comply may result in serious injury or death to personnel.

1. Apply corrosion preventive compound on 10 rear brake spider assembly bolt threads.

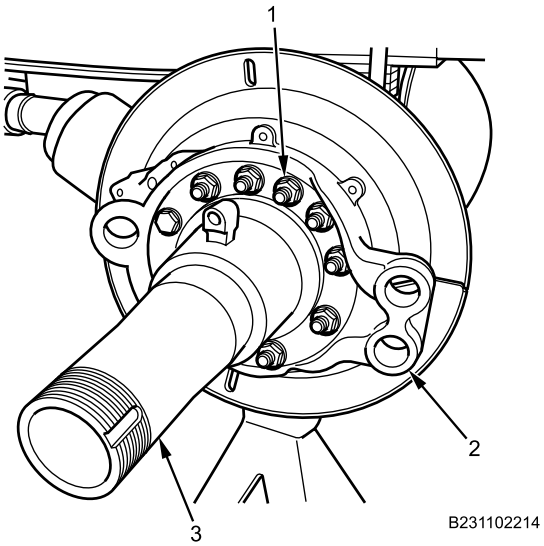

Figure 4. Rear Brake Spider Assembly.

2. Install rear brake spider assembly (Figure 4, Item 2) on rear axle assembly (Figure 4, Item 3) with 10 bolts, 10 washers, and 10 nuts (Figure 4, Item 1). Torque to 180-230 lb-ft (244-312 N•m).

END OF TASK

REAR BRAKE SPIDER ASSEMBLY REMOVAL AND INSTALLATION - (CONTINUED)

FOLLOW-ON MAINTENANCE

1. Install rear brake S-camshaft (WP 0495).
2. Install rear ABS sensor (WP 0491).
3. Install rear brake shoes (WP 0493).
4. Install rear brake drum and hub assembly (WP 0494).
5. Un-cage rear brakes (WP 0484).
6. Install rear wheel and tire (WP 0530).
7. Turn MAIN POWER switch on (TM 9-2355-106-10).
8. Test-drive to verify brake operation (TM 9-2355-106-10).
9. Inspect for fluid leaks (TM 9-2355-106-10).
10. Shut engine off (TM 9-2355-106-10).
11. Turn MAIN POWER switch off (TM 9-2355-106-10).
12. Remove wheel chocks (TM 9-2355-106-10).

END OF TASK

END OF WORK PACKAGE

FIELD MAINTENANCE

REAR SLACK ADJUSTER ASSEMBLY REMOVAL AND INSTALLATION

INITIAL SETUP:

Tools and Special Tools
General Mechanic's Tool Kit (GMTK) (WP 0795, Item 37)
Grease gun (WP 0795, Item 41)
Dial indicator set (WP 0795, Item 27)
Snapring pliers (WP 0795, Item 92)

Materials/Parts
Grease (WP 0794, Item 21)
Clip - (2) (WP 0796, Item 106)
Washer - (2) (WP 0796, Item 42)

References
TM 9-2355-106-10
TM 9-2355-106-23P
WP 0782

Equipment Condition
Parking brake set (TM 9-2355-106-10)
Transmission set in NEUTRAL (N) (TM 9-2355-106-10)
Engine off (TM 9-2355-106-10)
MAIN POWER switch off (TM 9-2355-106-10)
Wheels chocked (TM 9-2355-106-10)
Air tanks drained (TM 9-2355-106-10)

NOTE

Left side shown; right side similar.

There are two types of slack adjusters: one with two clevis pins and one with one clevis pin.

REMOVAL OF SLACK ADJUSTER WITH TWO CLEVIS PINS

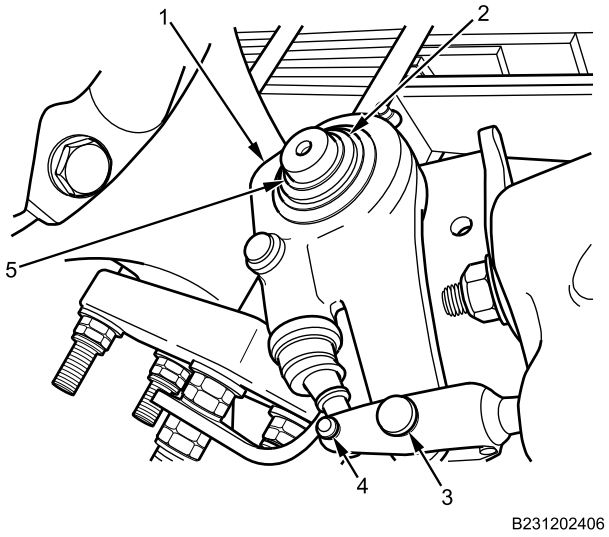

Figure 1. Two-Pin Slack Adjuster Removal.

1. Remove small clevis pin (Figure 1, Item 4) and clip from slack adjuster assembly (Figure 1, Item 1). Discard clip.
2. Remove large clevis pin (Figure 1, Item 3) and clip from slack adjuster assembly (Figure 1, Item 1). Discard clip.
3. Remove snapring (Figure 1, Item 2), washers, and slack adjuster assembly (Figure 1, Item 1) from brake S-camshaft (Figure 1, Item 5).

END OF TASK

REAR SLACK ADJUSTER ASSEMBLY REMOVAL AND INSTALLATION - (CONTINUED)

REMOVAL OF SLACK ADJUSTER WITH ONE CLEVIS PIN

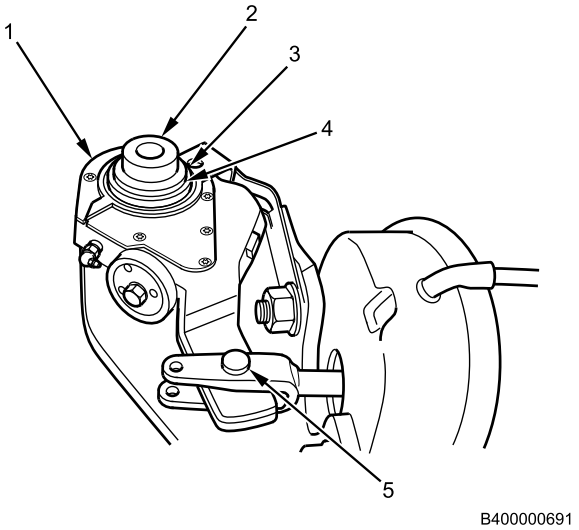

Figure 2. Snapring and Clevis Pin Removal.

1. Remove clevis pin (Figure 2, Item 5) and clip from slack adjuster assembly (Figure 2, Item 1). Discard clip.
2. Remove snapring (Figure 2, Item 4) and washers (Figure 2, Item 3) from brake S-camshaft (Figure 2, Item 2).

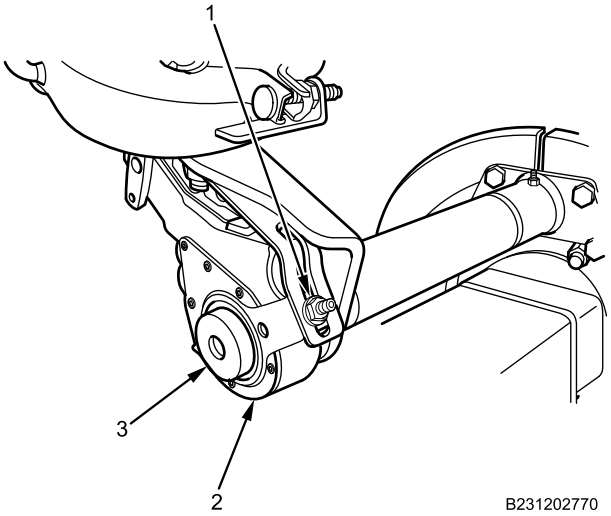

Figure 3. One-Pin Slack Adjuster Removal.

3. Remove nut (Figure 3, Item 1) and slack adjuster assembly (Figure 3, Item 2) from brake S-camshaft (Figure 3, Item 3).

END OF TASK

REAR SLACK ADJUSTER ASSEMBLY REMOVAL AND INSTALLATION - (CONTINUED)

INSTALLATION OF SLACK ADJUSTER WITH TWO CLEVIS PINS

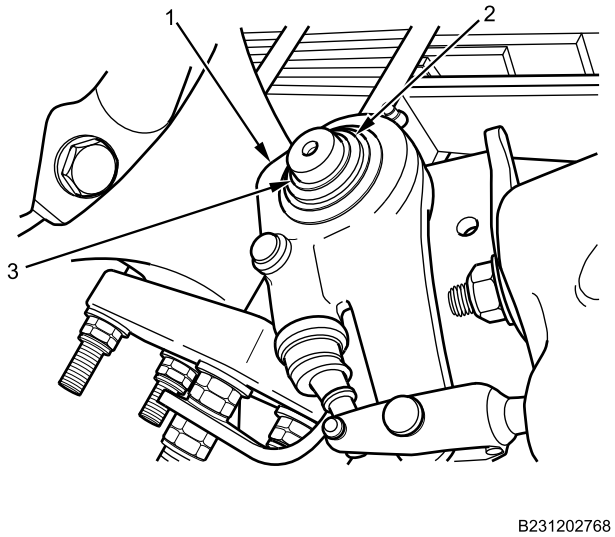

Figure 4. Two-Pin Slack Adjuster Installation.

1. Install slack adjuster assembly (Figure 4, Item 1) onto brake S-camshaft (Figure 4, Item 3) and secure with snapring (Figure 4, Item 2).
2. Check end play between brake S-camshaft (Figure 4, Item 3) and slack adjuster assembly (Figure 4, Item 1) with dial indicator. Desired end play is 0.000-0.060 in. (0.00-1.5 mm).
3. If end play is not within specifications, remove snapring and install washers as necessary onto brake S-camshaft (Figure 4, Item 3). Secure slack adjuster assembly (Figure 4, Item 1) with snapring (Figure 4, Item 2). Repeat steps 2 and 3 as necessary.

REAR SLACK ADJUSTER ASSEMBLY REMOVAL AND INSTALLATION - (CONTINUED)

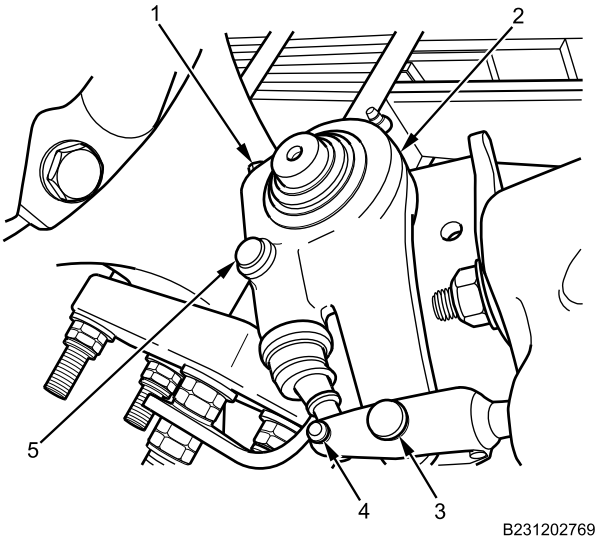

Figure 5. Clevis Pins Installation.

CAUTION

Disengage pull pawl before rotating the manual adjusting nut, to avoid damage to the pull pawl teeth.

NOTE

Pull pawls are spring loaded. The pull pawl will re-engage automatically when released.

4. Disengage pull pawl (Figure 5, Item 5) by lifting up from slack adjuster (Figure 5, Item 2)

REAR SLACK ADJUSTER ASSEMBLY REMOVAL AND INSTALLATION - (CONTINUED)

NOTE

Do not pull air chamber rod out to meet the brake adjuster.

5. Rotate manual adjusting nut (Figure 5, Item 1) clockwise until clevis pins (Figure 5, Item 3 and 4) line up with slack adjuster clevis pin holes.
6. Install large clevis pin (Figure 5, Item 3) and new clip on slack adjuster assembly (Figure 5, Item 2).
7. Install small clevis pin (Figure 5, Item 4) and new clip on slack adjuster assembly (Figure 5, Item 2).
8. Turn manual adjusting nut (Figure 5, Item 1) clockwise until brake shoes contact brake drum. Back off adjusting nut counterclockwise 1/2 turn from brake drum.

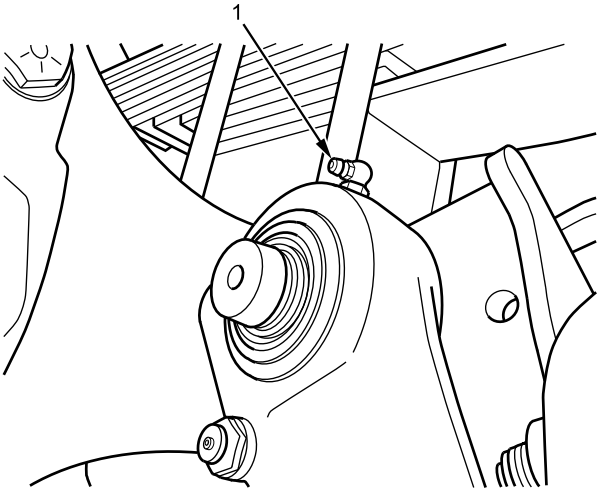

B231202144

Figure 6. Grease Fitting.

9. Grease slack adjuster grease fitting (Figure 6, Item 1).

END OF TASK

REAR SLACK ADJUSTER ASSEMBLY REMOVAL AND INSTALLATION - (CONTINUED)

INSTALLATION OF SLACK ADJUSTER WITH ONE CLEVIS PIN

CAUTION

Do not use air tools on manual adjusting nut, as internal damage to slack adjuster will occur.

NOTE

Do not pull air chamber rod out to meet brake adjuster.

1. Install slack adjuster assembly (Figure 7, Item 1) onto brake S-camshaft (Figure 7, Item 2) and secure with snapring (Figure 7, Item 4).

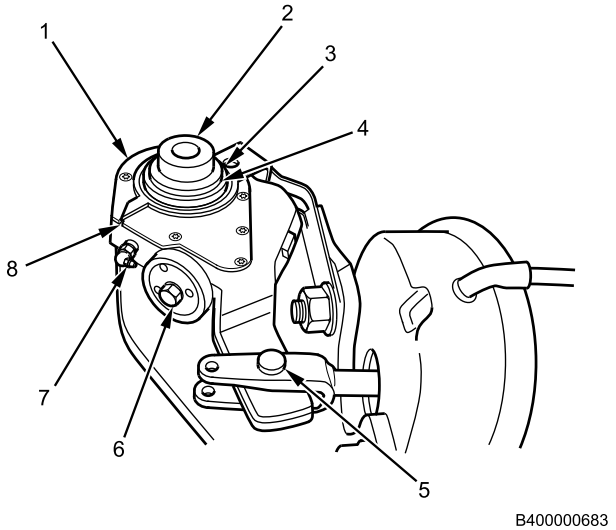

Figure 7. One-Pin Slack Adjuster Installation.

2. Check end play between brake S-camshaft (Figure 7, Item 2) and slack adjuster assembly (Figure 7, Item 1) with dial indicator. Desired end play is 0.000-0.060 in. (0.00-1.5 mm).
3. If end play is not within specifications, remove snapring and install washers (Figure 7, Item 3) as necessary onto brake S-camshaft (Figure 7, Item 2). Secure slack adjuster assembly (Figure 7, Item 1) with snapring (Figure 7, Item 4). Repeat steps 2 and 3 as necessary.
4. Rotate manual adjusting nut (Figure 7, Item 6) clockwise until clevis pin (Figure 7, Item 5) lines up with slack adjuster clevis pin hole.
5. Install clevis pin (Figure 7, Item 5) and new clip on slack adjuster assembly (Figure 7, Item 1).
6. Align installation indicator (Figure 7, Item 8) with slot.
7. Grease slack adjuster grease fitting (Figure 7, Item 7).

REAR SLACK ADJUSTER ASSEMBLY REMOVAL AND INSTALLATION - (CONTINUED)

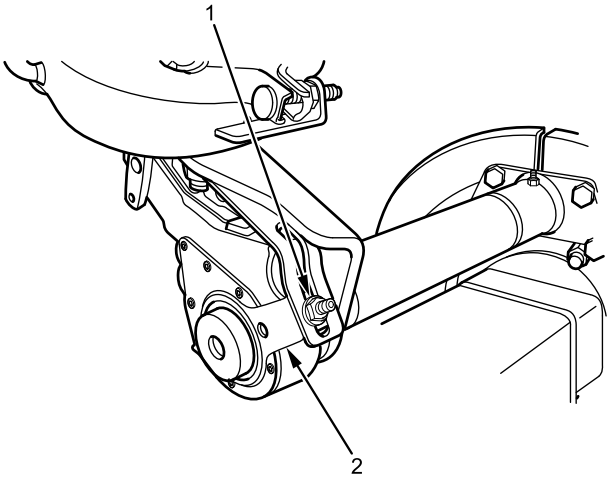

Figure 8. Slack Adjuster Nut Installation.

8. Install nut (Figure 8, Item 1) on slack adjuster control arm (Figure 8, Item 2). Tighten and secure.

NOTE

Minimum of 13 lb-ft (18 N•m) is necessary to overcome the internal clutch when turning manual adjusting nut counterclockwise. Ratcheting sound will occur when turning manual adjusting nut counterclockwise.

9. Turn adjusting nut clockwise until brake shoes contact brake drum. Back off adjusting nut counterclockwise 1/2 turn from brake drum.

END OF TASK

FOLLOW-ON MAINTENANCE

1. Adjust rear brake shoes (WP 0484).
2. Turn MAIN POWER switch on (TM 9-2355-106-10).
3. Start engine and allow air brake system pressure to build to normal range (TM 9-2355-106-10).
4. Check for leaks.
5. Turn engine off (TM 9-2355-106-10).
6. Turn MAIN POWER switch off (TM 9-2355-106-10).
7. Remove wheel chocks (TM 9-2355-106-10).
8. Verify proper brake operation.

END OF TASK

END OF WORK PACKAGE

FIELD MAINTENANCE

BRAKE S-CAMSHAFT TUBE SUPPORT BRACKET REMOVAL AND INSTALLATION

INITIAL SETUP:

Tools and Special Tools
General Mechanic's Tool Kit (GMTK) (WP 0795, Item 37)
Wrench, torque, 90-600 lb-ft, 3/4-inch drive (WP 0795, Item 144)
Adapter, socket, wrench drive, 3/4-inch female - 1/2-inch male (WP 0795, Item 4)

Materials/Parts
Compound (WP 0794, Item 13)
Goggles, industrial (WP 0794, Item 20)
Faceshield, industrial (WP 0794, Item 16)
Lockwasher (WP 0796, Item 117)
Gloves (WP 0794, Item 18)

References
TM 9-2355-106-10
TM 9-2355-106-23P
WP 0782

Equipment Condition
Parking brake set (TM 9-2355-106-10)
Transmission set in NEUTRAL (N) (TM 9-2355-106-10)
Engine off (TM 9-2355-106-10)
MAIN POWER switch off (TM 9-2355-106-10)
Wheels chocked (TM 9-2355-106-10)

BRAKE S-CAMSHAFT TUBE SUPPORT BRACKET REMOVAL AND INSTALLATION - (CONTINUED)

NOTE

Left shown, right similar.

REMOVAL

1. Remove rear spring U-bolt nut and lockwasher (Figure 1, Item 4) from rear spring U-bolt (Figure 1, Item 2). Discard lockwasher (Figure 1, Item 4).

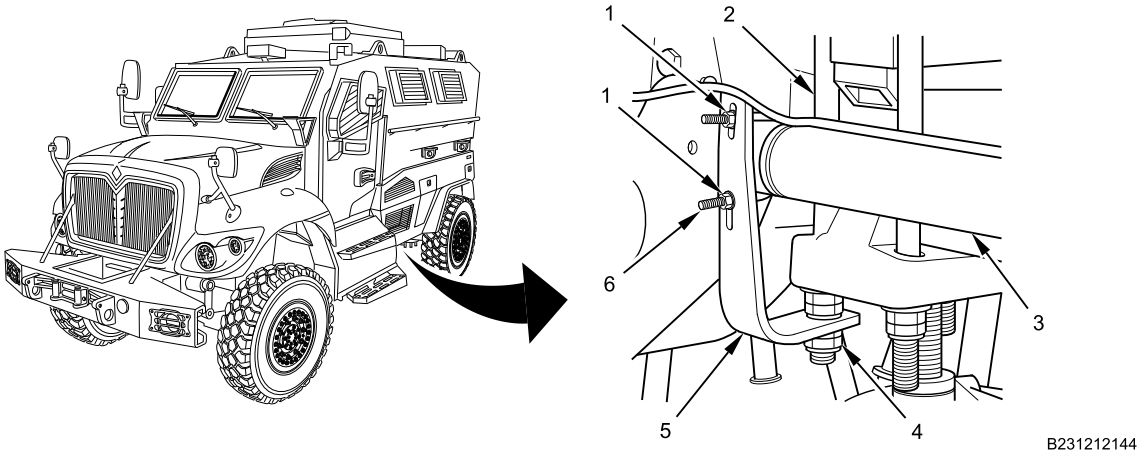

Figure 1. Brake S-Camshaft Tube Support Bracket.

2. Remove S-camshaft tube clamp nuts and flat washers (Figure 1, Item 1) from S-camshaft tube clamp (Figure 1, Item 6).
3. Remove S-camshaft tube clamp (Figure 1, Item 6) from S-camshaft tube support bracket (Figure 1, Item 5) and S-camshaft tube (Figure 1, Item 3).
4. Remove S-camshaft tube support bracket (Figure 1, Item 5) from rear spring U-bolt (Figure 1, Item 2).

END OF TASK

INSTALLATION

WARNING

Corrosion preventive compound is toxic. Use only in well-ventilated area. Do not get in eyes; wear chemical safety goggles and full-face shield when using. Avoid contact with skin and wear rubber or plastic, solvent-resistant gloves. In case of contact, remove contaminated clothing and immediately wash area with soap and water. If compound contacts eyes, flush eyes with large amounts of water for at least 15 minutes and get immediate medical attention. If swallowed, do not induce vomiting; contact a physician immediately. Failure to comply may result in serious injury or death to personnel.

1. Apply corrosion preventive compound to tube clamp (Figure 2, Item 6), nut and new lockwasher (Figure 2, Item 4), and nuts and flat washers (Figure 2, Item 1).

BRAKE S-CAMSHAFT TUBE SUPPORT BRACKET REMOVAL AND INSTALLATION - (CONTINUED)

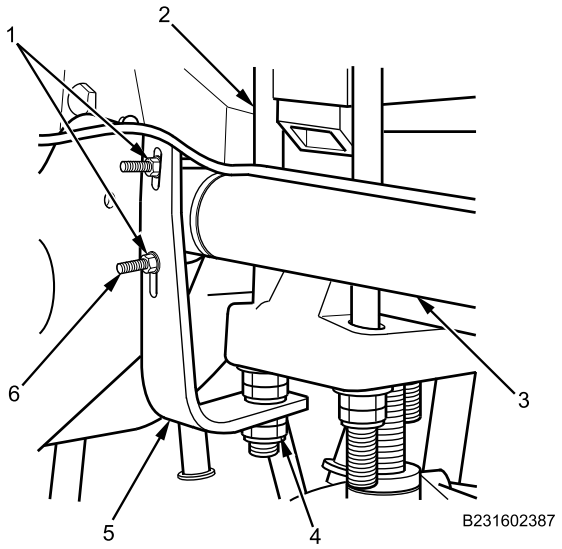

Figure 2. Brake S-Camshaft Tube Support Bracket.

2. Position tube support bracket (Figure 2, Item 5) on rear spring U-bolt (Figure 2, Item 2), and loosely install rear spring U-bolt new lockwasher and nut (Figure 2, Item 4) on rear spring U-bolt.
3. Position tube clamp (Figure 2, Item 6) on tube (Figure 2, Item 3) and tube support bracket (Figure 2, Item 5), and loosely install tube clamp nuts and flat washers (Figure 2, Item 1) on tube clamp.
4. Torque U-bolt nut (Figure 2, Item 4) to 370-400 lb-ft (502-542 N•m).
5. Tighten tube clamp nuts (Figure 2, Item 1) securely.

END OF TASK

FOLLOW-ON MAINTENANCE

1. Turn MAIN POWER switch on (TM 9-2355-106-10).
2. Start engine and allow air brake system pressure to build to normal range (TM 9-2355-106-10).
3. Remove wheel chocks (TM 9-2355-106-10).
4. Test drive to verify proper brake operation (TM 9-2355-106-10).
5. Set parking brake (TM 9-2355-106-10).
6. Set transmission set in NEUTRAL (N) (TM 9-2355-106-10).
7. Turn engine off (TM 9-2355-106-10).
8. Turn MAIN POWER switch off (TM 9-2355-106-10).

END OF TASK

END OF WORK PACKAGE

FIELD MAINTENANCE

AIR RESERVOIR TANK REMOVAL AND INSTALLATION

INITIAL SETUP:

Tools and Special Tools
General Mechanic's Tool Kit (GMTK) (WP 0795, Item 37)
Jack, transmission (WP 0795, Item 61)
Wrench, torque, 40-200 lb-in., 3/8-inch drive (WP 0795, Item 142)
Snapring Pliers Tool Kit (WP 0795, Item 92)

Materials/Parts
Goggles, industrial (WP 0794, Item 20)
Gloves (WP 0794, Item 18)
Valve - (2) (WP 0796, Item 139)
Valve (WP 0796, Item 113)
Compound (WP 0794, Item 13)
Sealing compound (WP 0794, Item 44)
Wire tags (WP 0794, Item 33)
Cable lock strap (WP 0796, Item 120)

Personnel Required
Maintainer - (2)

References
TM 9-2355-106-10
TM 9-2355-106-23P
WP 0782

Equipment Condition
Parking brake set (TM 9-2355-106-10)
Transmission set in NEUTRAL (N) (TM 9-2355-106-10)
Engine off (TM 9-2355-106-10)
MAIN POWER switch off (TM 9-2355-106-10)
Wheels chocked (TM 9-2355-106-10)
Air pressure drained from all air brake reservoirs (TM 9-2355-106-10)
Batteries removed (WP 0418)
Belly armor removed (WP 0606)
Air tanks and reservoirs drained (TM 9-2355-106-10)

WARNING

Do not operate vehicle with air pressure system loss. Vehicle has reduced or no braking capability and may not stop. Failure to comply may result in damage to equipment and serious injury or death to personnel.

Let air pressure build in both tanks to 100 psi (689 kPa) before releasing the parking brake. Low air pressure may affect vehicle braking capability. Failure to comply may result in injury or death to personnel.

AIR RESERVOIR TANK REMOVAL AND INSTALLATION - (CONTINUED)

SECONDARY AND SUPPLY TANK REMOVAL

NOTE

Air tank removal is not required for replacing individual valves or fittings.

Label all air lines before removal.

Remove and discard cable lock straps as necessary and note location for position during installation.

1. Disconnect supply-to-secondary tank small ORANGE air line (Figure 1, Item 1) from air line support (Figure 1, Item 2).

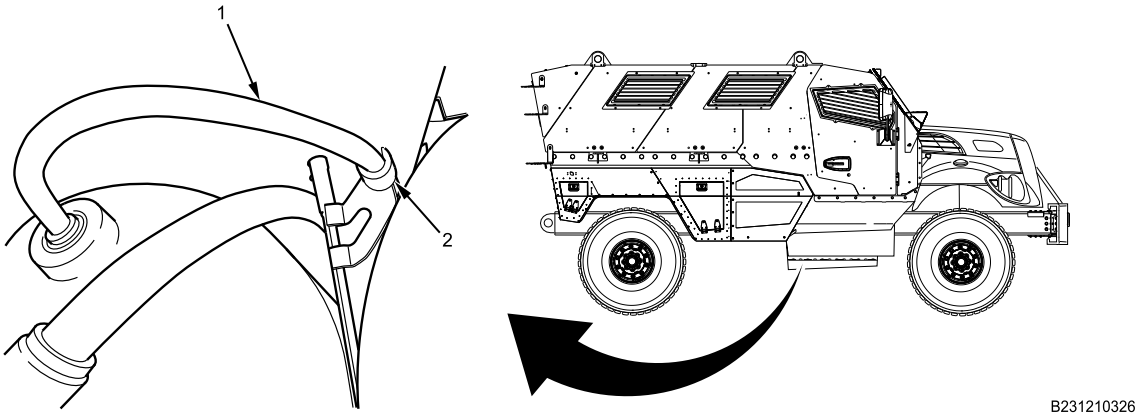

Figure 1. Secondary Tank Air Lines.

AIR RESERVOIR TANK REMOVAL AND INSTALLATION - (CONTINUED)

2. Disconnect supply-to-secondary tank small ORANGE air line (Figure 2, Item 2) from secondary air tank (Figure 2, Item 1).

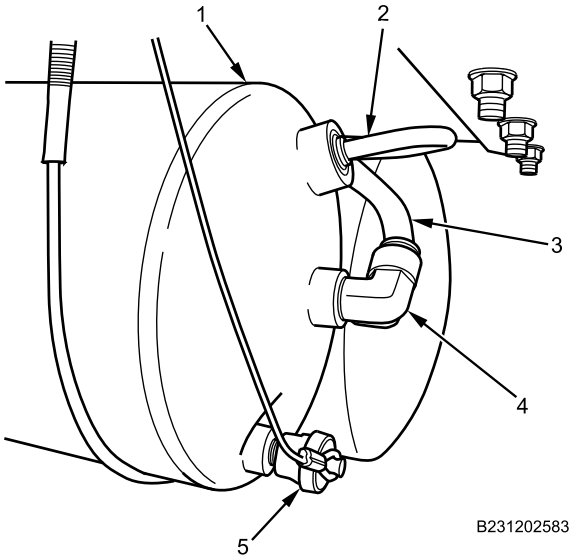

Figure 2. Secondary Tank Air Lines and Fittings.

3. Disconnect large ORANGE air line (Figure 2, Item 3) from secondary air tank angle fitting (Figure 2, Item 4).
4. Remove secondary air tank angle fitting (Figure 2, Item 4) from secondary air tank (Figure 2, Item 1).
5. Remove secondary air tank drain fitting (Figure 2, Item 5) from secondary air tank (Figure 2, Item 1).
6. Remove air drain cable nut (Figure 3, Item 3) and air drain cable (Figure 3, Item 2) from bolt in battery box tray (Figure 3, Item 1).

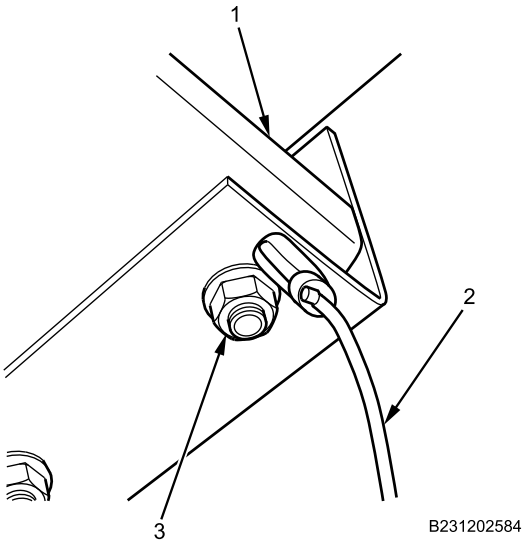

Figure 3. Secondary Tank Air Drain Cable.

AIR RESERVOIR TANK REMOVAL AND INSTALLATION - (CONTINUED)

7. Disconnect supply-to-secondary tank small ORANGE air line (Figure 4, Item 1) from supply air tank (Figure 4, Item 4).

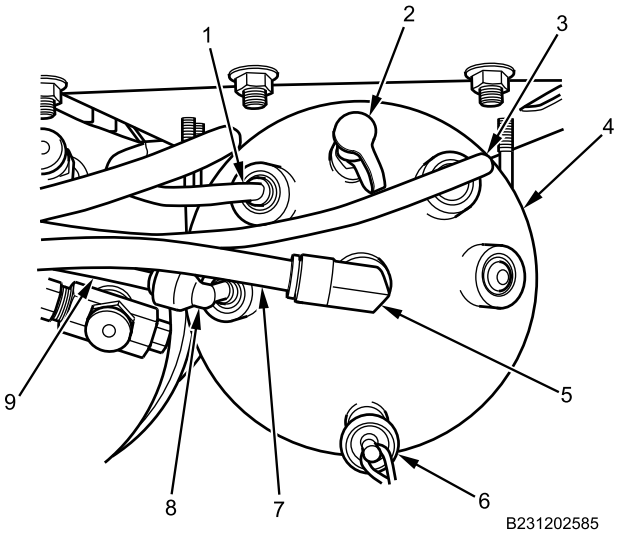

Figure 4. Supply Tank Air Lines and Fittings.

8. Disconnect supply-to-primary tank GREEN air line (Figure 4, Item 3) from supply air tank (Figure 4, Item 4).
9. Disconnect large BLACK air line (Figure 4, Item 7) from supply air tank angle metal fitting (Figure 4, Item 5).
10. Disconnect small BLACK air line (Figure 4, Item 9) from supply air tank angle plastic fitting (Figure 4, Item 8).
11. Remove supply air tank angle metal fitting (Figure 4, Item 5) from supply air tank (Figure 4, Item 4).
12. Remove supply air tank angle plastic fitting (Figure 4, Item 8) from supply air tank (Figure 4, Item 4).
13. Remove supply air tank safety valve fitting (Figure 4, Item 2) from supply air tank (Figure 4, Item 4).
14. Remove supply air tank drain fitting (Figure 4, Item 6) from supply air tank (Figure 4, Item 4).
15. Disconnect supply-to-secondary tank small ORANGE air line (Figure 5, Item 2) from air line support (Figure 5, Item 1) and remove air line.

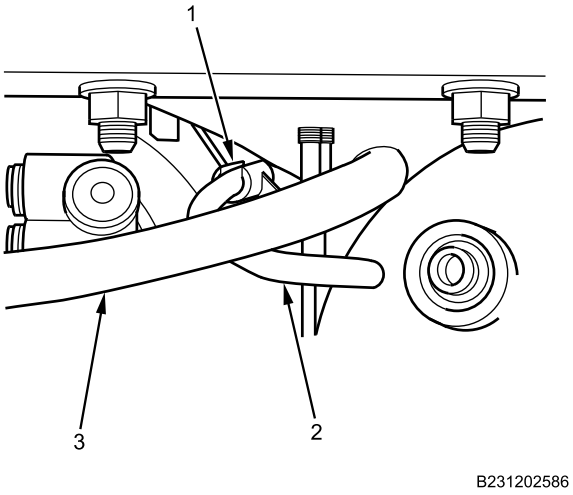

Figure 5. Secondary and Supply Tank Air Lines.

16. Remove large ORANGE air line (Figure 5, Item 3) from between air tanks.

AIR RESERVOIR TANK REMOVAL AND INSTALLATION - (CONTINUED)

17. Remove air drain cable nut (Figure 6, Item 2) and air drain cables retainer (Figure 6, Item 1) from bolt in battery box tray (Figure 6, Item 3).

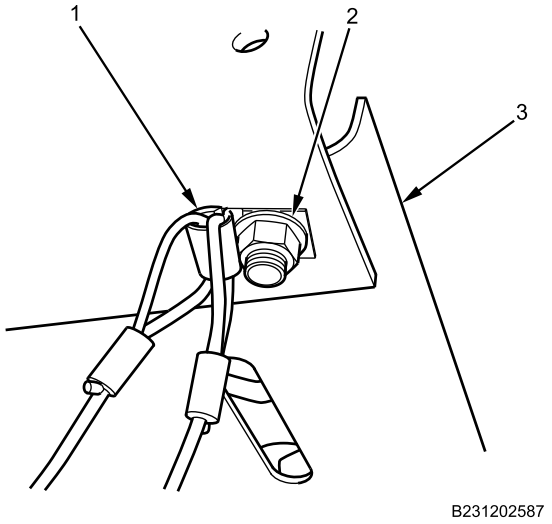

Figure 6. Primary and Supply Tank Air Drain Cables.

18. Remove plate assemblies (Figure 7, Item 1 and 2) from end of air tank mounting cables (Figure 7, Item 3 and 5) on battery tray.

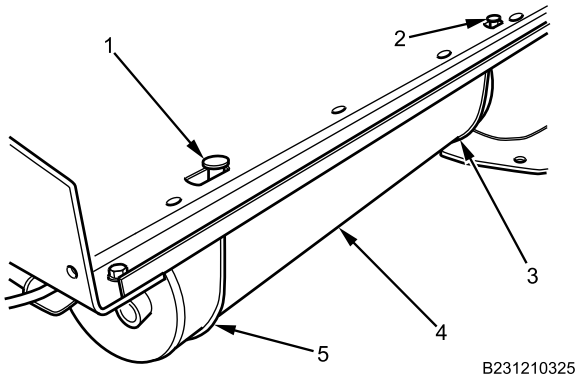

Figure 7. Supply and Secondary Tank Mounting.

19. Support supply/secondary air tank (Figure 7, Item 4) with suitable transmission jack.

AIR RESERVOIR TANK REMOVAL AND INSTALLATION - (CONTINUED)

NOTE

Mark orientation of tanks for installation.

Secure cable underneath battery box to keep from rotating.

20. With assistant, remove jamb nuts (Figure 8, Item 2), nuts (Figure 8, Item 3), and washers (Figure 8, Item 4) from end of air tank mounting cables (Figure 8, Item 1), and lower supply/secondary air tank with transmission jack.

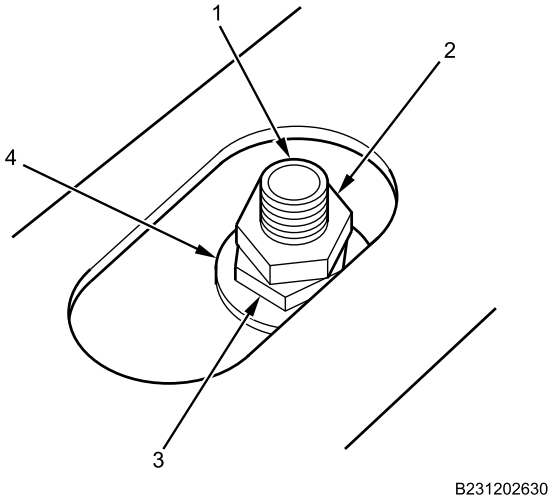

Figure 8. Air Tank Cable Fasteners.

END OF TASK

PRIMARY TANK REMOVAL

1. Disconnect supply-to-primary tank GREEN air line (Figure 9, Item 6) from primary air tank (Figure 9, Item 10).

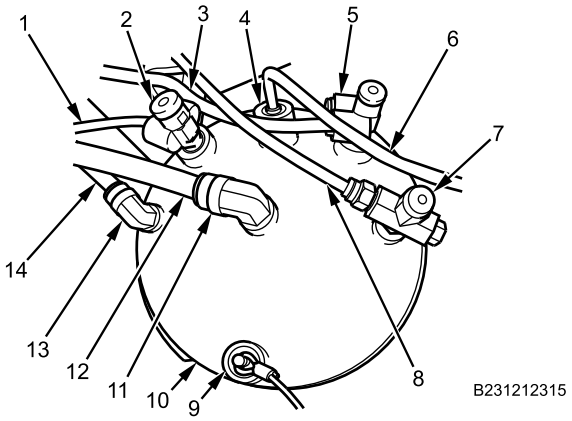

Figure 9. Primary Tank Air Lines and Fittings.

2. Remove supply air tank check valve (Figure 9, Item 4).
3. Disconnect BLACK air line (Figure 9, Item 8) from supply air tank pressure protection valve (Figure 9, Item 7).
4. Remove supply air tank pressure protection valve (Figure 9, Item 7) from primary air tank (Figure 9, Item 10).
5. Disconnect BLUE air line (Figure 9, Item 3) from supply air tank pressure protection valve (Figure 9, Item 5).
6. Remove supply air tank pressure protection valve (Figure 9, Item 5) from primary air tank (Figure 9, Item 10).
7. Discard supply air tank pressure protection valve (Figure 9, Item 5).

AIR RESERVOIR TANK REMOVAL AND INSTALLATION - (CONTINUED)

8. Disconnect large GREEN air line (Figure 9, Item 12) from supply air tank angle metal fitting (Figure 9, Item 11).
9. Remove supply air tank angle metal fitting (Figure 9, Item 11) from primary air tank (Figure 9, Item 10).
10. Disconnect small GREEN air line (Figure 9, Item 14) from supply air tank angle metal fitting (Figure 9, Item 13).
11. Remove supply air tank angle metal fitting (Figure 9, Item 13) from primary air tank (Figure 9, Item 10).
12. Disconnect WHITE air line (Figure 9, Item 1) from supply air tank pressure protection valve (Figure 9, Item 2).
13. Remove supply air tank pressure protection valve (Figure 9, Item 2) from primary air tank (Figure 9, Item 10).
14. Discard supply air tank pressure protection valve (Figure 9, Item 2).
15. Remove supply air tank drain (Figure 9, Item 9) from primary air tank (Figure 9, Item 10).
16. Support primary air tank (Figure 10, Item 1) with suitable transmission jack.

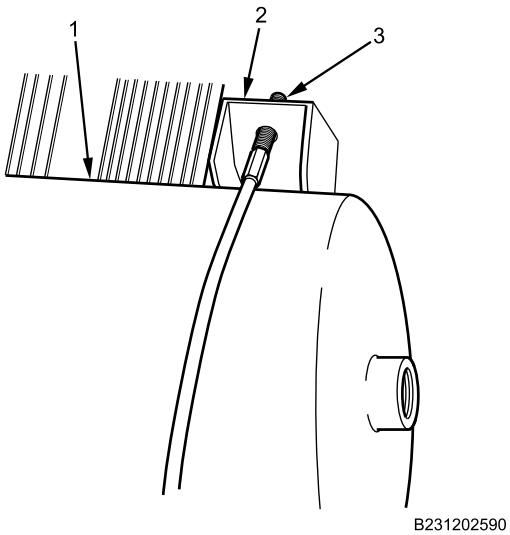

Figure 10. Primary Tank Mounting.

NOTE

Mark orientation of tanks for installation.

Secure cable underneath battery box to keep from rotating.

17. With assistant, remove jamb nuts, nuts, and washers from end of both air tank mounting cables (Figure 10, Item 3) on battery tray bracket (Figure 10, Item 2), and lower primary air tank (Figure 10, Item 1) with transmission jack.

END OF TASK

AIR RESERVOIR TANK REMOVAL AND INSTALLATION - (CONTINUED)

PRIMARY TANK INSTALLATION

1. With assistant, raise primary air tank (Figure 11, Item 1) into position with suitable transmission jack.

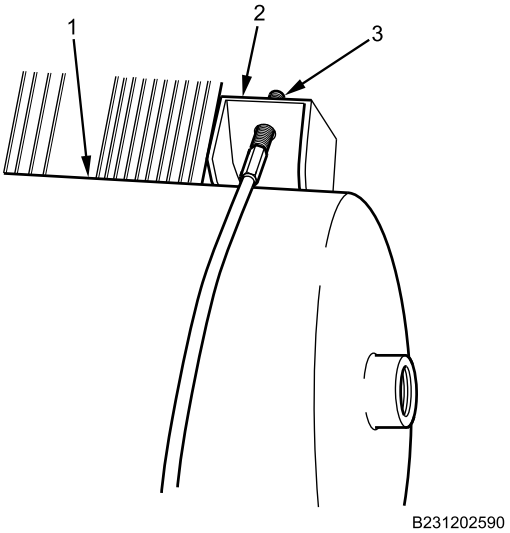

Figure 11. Primary Tank Mounting.

WARNING

Corrosion preventive compound is toxic. Use only in well-ventilated area. Use approved respirator with dual organic vapor/mist and particulate cartridge. Do not get in eyes; wear chemical safety goggles and full-face shield when using. Avoid contact with skin and wear rubber or plastic, solvent-resistant gloves. In case of contact, remove contaminated clothing and immediately wash area with soap and water. If compound contacts eyes, flush eyes with large amounts of water for at least 15 minutes and get immediate medical attention. If swallowed, do not induce vomiting; contact a physician immediately. Failure to comply may result in serious injury or death to personnel.

NOTE

Note orientation of tanks for installation.

Secure cable underneath battery box to keep from rotating.

2. Apply corrosion preventive compound to air tank mounting cable washers, nuts, and jamb nuts (Figure 11, Item 3).
3. Install both air tank mounting cables, washers, nuts, and jamb nuts (Figure 11, Item 3) on battery tray bracket (Figure 11, Item 2). Torque nuts to 62 lb-in. (7 N•m).

AIR RESERVOIR TANK REMOVAL AND INSTALLATION - (CONTINUED)

NOTE

Apply new thread sealant to threads of all fitting prior to installation.

4. Install new supply air tank pressure protection valve (Figure 12, Item 2) on primary air tank (Figure 12, Item 10) and tighten securely.

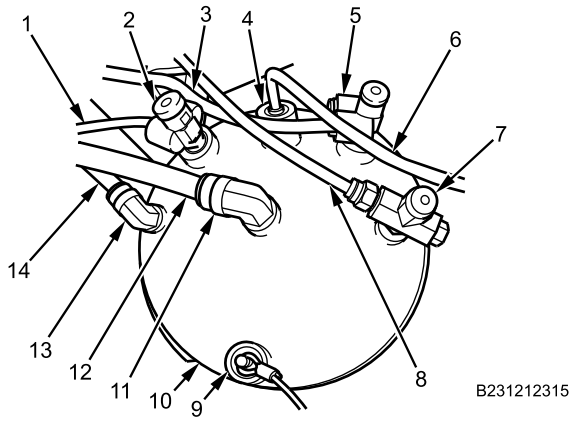

Figure 12. Primary Tank Air Lines and Fittings.

5. Connect WHITE air line (Figure 12, Item 1) on supply air tank pressure protection valve (Figure 12, Item 2).
6. Install supply air tank angle metal fitting (Figure 12, Item 13) on primary air tank (Figure 12, Item 10) and tighten securely.
7. Connect small GREEN air line (Figure 12, Item 14) on supply air tank angle metal fitting (Figure 12, Item 13).
8. Install supply air tank angle metal fitting (Figure 12, Item 11) on primary air tank (Figure 12, Item 10) and tighten securely.
9. Connect large GREEN air line (Figure 12, Item 12) on supply air tank angle metal fitting (Figure 12, Item 11).
10. Install new supply air tank pressure protection valve (Figure 12, Item 5) on primary air tank (Figure 12, Item 10) and tighten securely.
11. Connect BLUE air line (Figure 12, Item 3) on supply air tank pressure protection valve (Figure 12, Item 5).
12. Install supply air tank pressure protection valve (Figure 12, Item 7) on primary air tank (Figure 12, Item 10) and tighten securely.
13. Connect BLACK air line (Figure 12, Item 8) on supply air tank pressure protection valve (Figure 12, Item 7).
14. Install supply air tank check valve(Figure 12, Item 4) to primary air tank (Figure 12, Item 10).
15. Connect supply-to-primary tank GREEN air line (Figure 12, Item 6) on primary air tank (Figure 12, Item 10).
16. Install drain valve (Figure 12, Item 9) to primary air tank (Figure 12, Item 10).

END OF TASK

AIR RESERVOIR TANK REMOVAL AND INSTALLATION - (CONTINUED)

SECONDARY AND SUPPLY TANK INSTALLATION

1. Route two ORANGE air lines (Figure 13, Item 1 and 2) between both air tanks prior to raising secondary air tank.

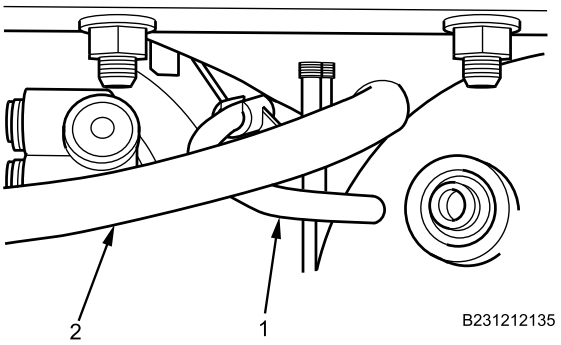

Figure 13. Route Two Air Lines.

2. With assistant, raise supply/secondary air tank (Figure 14, Item 4) into position with suitable transmission jack.

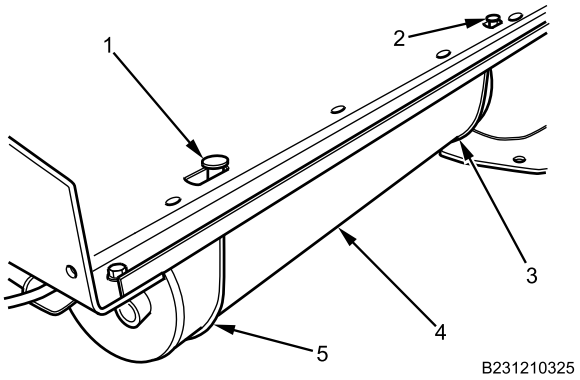

Figure 14. Supply and Secondary Tank Mounting.

AIR RESERVOIR TANK REMOVAL AND INSTALLATION - (CONTINUED)

WARNING

Corrosion preventive compound is toxic. Use only in well-ventilated area. Do not get in eyes; wear chemical safety goggles and full-face shield when using. Avoid contact with skin and wear rubber or plastic, solvent-resistant gloves. In case of contact, remove contaminated clothing and immediately wash area with soap and water. If compound contacts eyes, flush eyes with large amounts of water for at least 15 minutes and get immediate medical attention. If swallowed, do not induce vomiting; contact a physician immediately. Failure to comply may result in serious injury or death to personnel.

NOTE

Note orientation of tanks for installation.

Secure cable underneath battery box to keep from rotating.

3. Apply corrosion preventive compound to air tank mounting cable washers (Figure 15, Item 4), nuts (Figure 15, Item 3), and jamb nuts (Figure 15, Item 2).

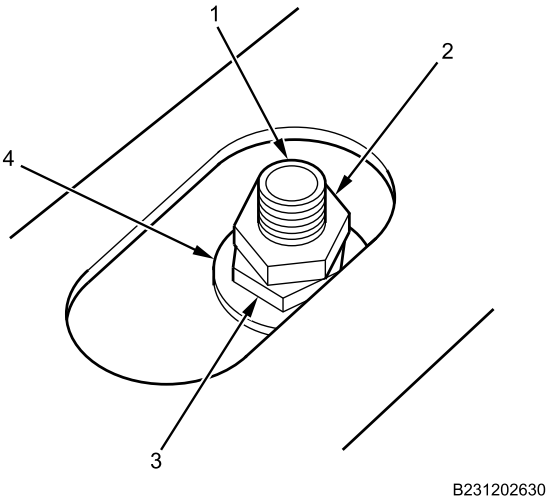

Figure 15. Air Tank Cable Fasteners.

4. Install air tank mounting cables (Figure 14, Item 3 and 5), washers (Figure 15, Item 4), nuts (Figure 15, Item 3), and jamb nuts (Figure 15, Item 2) and torque to 62 lb-in. (7 N•m).

AIR RESERVOIR TANK REMOVAL AND INSTALLATION - (CONTINUED)

WARNING

Thread sealing compound is harmful to skin and eyes. If thread sealing compound contacts eyes, rinse thoroughly and contact physician if irritation persists. If skin is contacted, wash thoroughly with soap and water. Failure to comply may result in serious injury to personnel.

5. Apply thread sealing compound to threads on plate assemblies (Figure 14, Item 1 and 2) .
6. Install plate assemblies (Figure 14, Item 1 and 2) on end of air tank mounting cables (Figure 14, Item 3 and 5) on battery tray and tighten securely.
7. Install air drain cables retainer (Figure 16, Item 1) and air drain cable nut (Figure 16, Item 2) on bolt in battery box tray (Figure 16, Item 3). Tighten nut securely.

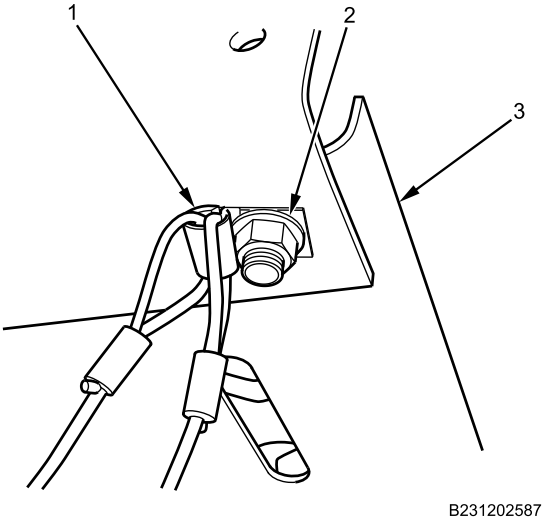

Figure 16. Primary and Supply Tank Air Drain Cables.

8. Connect supply-to-secondary tank small ORANGE air line (Figure 17, Item 2) on air line support (Figure 17, Item 1).

AIR RESERVOIR TANK REMOVAL AND INSTALLATION - (CONTINUED)

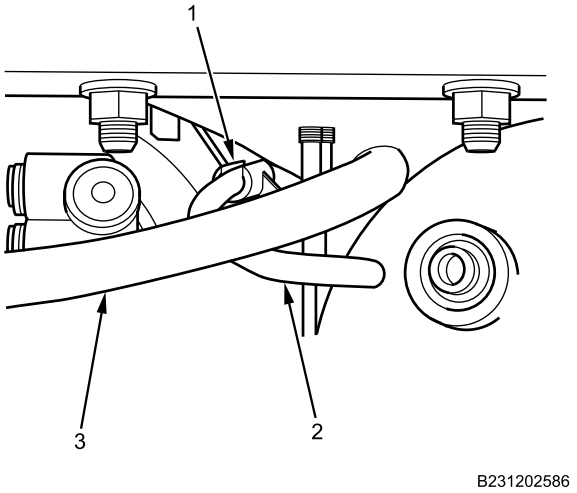

Figure 17. Secondary and Supply Tank Air Lines.

WARNING

Thread sealing compound is harmful to skin and eyes. If thread sealing compound contacts eyes, rinse thoroughly and contact physician if irritation persists. If skin is contacted, wash thoroughly with soap and water. Failure to comply may result in serious injury to personnel.

NOTE

Apply new thread sealant to threads of all fitting prior to installation.

9. Install supply air tank drain fitting (Figure 18, Item 6) on supply air tank (Figure 18, Item 4) and tighten securely.

AIR RESERVOIR TANK REMOVAL AND INSTALLATION - (CONTINUED)

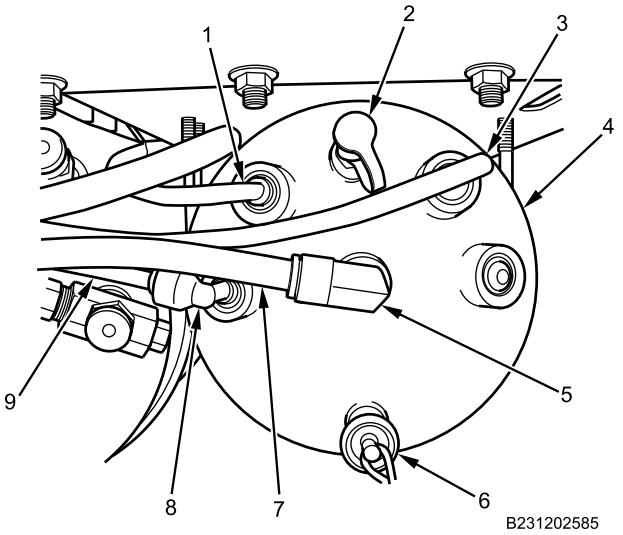

Figure 18. Supply Tank Air Lines and Fittings.

10. Install supply air tank safety valve fitting (Figure 18, Item 2) on supply air tank (Figure 18, Item 4) and tighten securely.
11. Install supply air tank angle plastic fitting (Figure 18, Item 8) on supply air tank (Figure 18, Item 4) and tighten securely.
12. Connect small BLACK air line (Figure 18, Item 9) on supply air tank angle plastic fitting (Figure 18, Item 8).
13. Install supply air tank angle metal fitting (Figure 18, Item 5) on supply air tank (Figure 18, Item 4) and tighten securely.
14. Connect large BLACK air line (Figure 18, Item 7) on supply air tank angle metal fitting (Figure 18, Item 5).
15. Connect supply-to-primary tank GREEN air line (Figure 18, Item 3) on supply air tank (Figure 18, Item 4).
16. Connect supply-to-secondary tank small ORANGE air line (Figure 18, Item 1) on supply air tank (Figure 18, Item 4).
17. Install air drain cable (Figure 19, Item 2) and air drain cable nut (Figure 19, Item 3) on bolt in battery box tray (Figure 19, Item 1). Tighten nut securely.

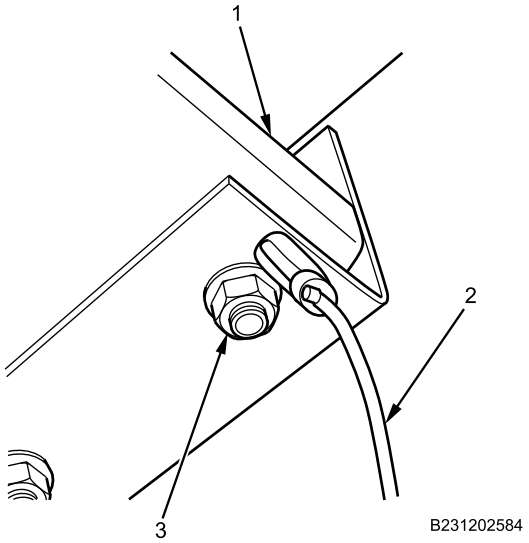

Figure 19. Secondary Tank Air Drain Cable.

AIR RESERVOIR TANK REMOVAL AND INSTALLATION - (CONTINUED)

18. Install secondary air tank drain fitting (Figure 20, Item 5) on secondary air tank (Figure 20, Item 1) and tighten securely.

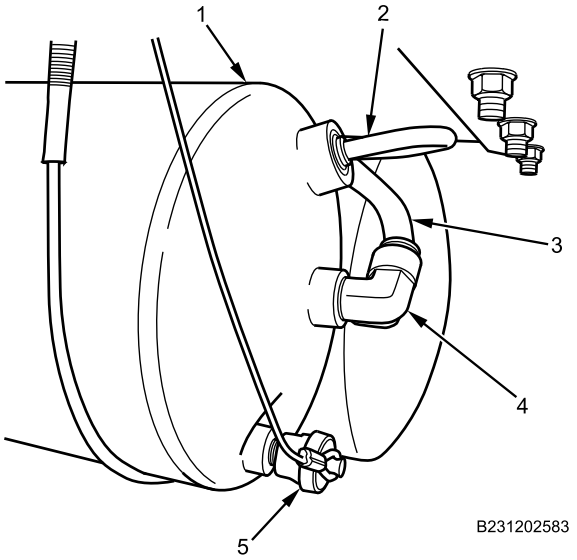

Figure 20. Secondary Tank Air Lines and Fittings.

19. Install secondary air tank angle fitting (Figure 20, Item 4) on secondary air tank (Figure 20, Item 1) and tighten securely.
20. Connect large ORANGE air line (Figure 20, Item 3) on secondary air tank angle fitting (Figure 20, Item 4).
21. Connect supply-to-secondary tank small ORANGE air line (Figure 20, Item 2) on secondary air tank (Figure 20, Item 1).
22. Connect supply-to-secondary tank small ORANGE air line (Figure 21, Item 1) on air line support (Figure 21, Item 2).

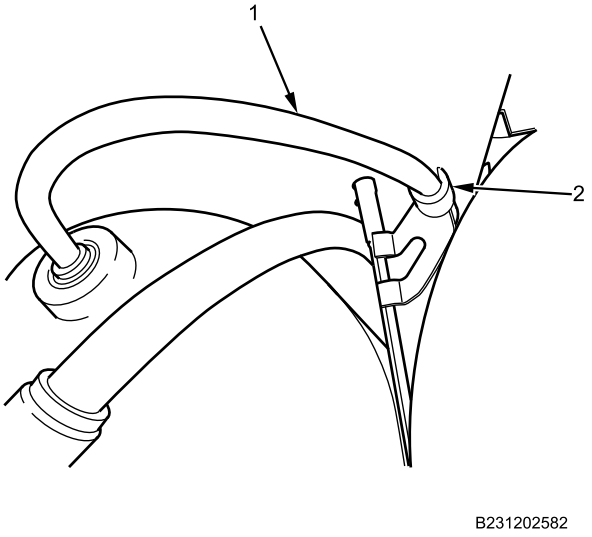

Figure 21. Secondary Tank Air Lines.

AIR RESERVOIR TANK REMOVAL AND INSTALLATION - (CONTINUED)

23. Install new cable lock straps as necessary.

END OF TASK

FOLLOW-ON MAINTENANCE

1. Install batteries (WP 0418).
2. Remove wheel chocks (TM 9-2355-106-10).
3. Turn MAIN POWER switch on (TM 9-2355-106-10).
4. Start engine (TM 9-2355-106-10).
5. Test-drive vehicle to verify brake system operation (TM 9-2355-106-10).
6. Inspect for air leaks (TM 9-2355-106-10).
7. Install belly armor (WP 0606).
8. Set transmission in NEUTRAL (N) (TM 9-2355-106-10).
9. Set vehicle parking brake (TM 9-2355-106-10).
10. Turn engine off (TM 9-2355-106-10).
11. Turn MAIN POWER switch off (TM 9-2355-106-10).

END OF TASK

END OF WORK PACKAGE

FIELD MAINTENANCE

CABIN DOOR ASSIST SYSTEM LIMIT VALVE REMOVAL AND INSTALLATION

INITIAL SETUP:

Tools and Special Tools
General Mechanic's Tool Kit (GMTK) (WP 0795, Item 37)

Materials/Parts
Sealing compound (WP 0794, Item 44)
Goggles, industrial (WP 0794, Item 20)

References
TM 9-2355-106-10
TM 9-2355-106-23P
WP 0782

Equipment Condition
Parking brake set (TM 9-2355-106-10)
Transmission set in NEUTRAL (N) (TM 9-2355-106-10)
Engine off (TM 9-2355-106-10)
MAIN POWER switch off (TM 9-2355-106-10)
Wheels chocked (TM 9-2355-106-10)
Air tanks and reservoirs drained (TM 9-2355-106-10)
Belly armor removed (WP 0606)

WARNING

Before working on air brake system or any auxiliary pressurized system, make sure air pressure has been drained from all reservoirs. Failure to comply may result in serious injury or death to personnel.

Air drain valves are under pressure. Wear protective goggles and do not place face in front of air drain valves while draining air reservoirs. Open air drain valves slowly to release air pressure gradually. Failure to comply may result in serious injury or death to personnel.

Do not disconnect any air line or fitting until system pressure has been relieved. Hoses may whip and injure personnel, and air under pressure can penetrate skin. Failure to comply may result in serious injury or death to personnel.

NOTE

Note position of limit valve to aid installation.

CABIN DOOR ASSIST SYSTEM LIMIT VALVE REMOVAL AND INSTALLATION - (CONTINUED)

REMOVAL

1. Remove BLUE supply air line tubing (Figure 1, Item 1) from primary air tank limit valve (Figure 1, Item 2).

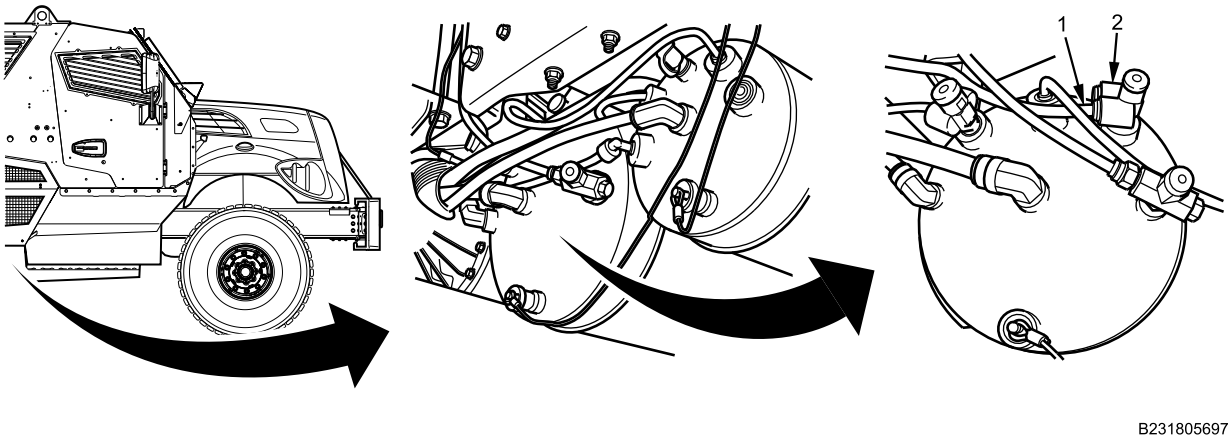

Figure 1. Primary and Supply Tanks.

2. Turn limit valve (Figure 1, Item 2) counter-clockwise to remove from primary air tank.

END OF TASK

INSTALLATION

WARNING

Adhesives, solvents, and sealing compounds can burn easily, can give off harmful vapors, and are harmful to skin and clothing. Wear goggles and protective clothing. Keep away from open flame and use in well-ventilated area. If adhesive, solvent, or sealing compound get on skin or clothing, wash immediately with soap and water. Failure to comply may result in injury or death to personnel.

1. Apply sealing compound on threads of limit valve before installation.

CABIN DOOR ASSIST SYSTEM LIMIT VALVE REMOVAL AND INSTALLATION - (CONTINUED)

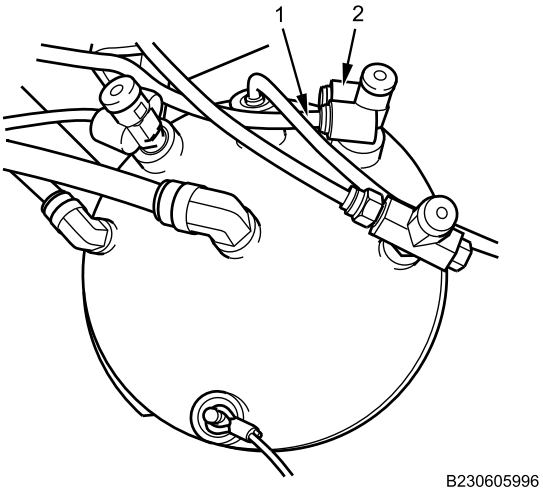

Figure 2. Limit Valve Installation.

2. Install limit valve (Figure 2, Item 2) on primary air tank by turning clockwise. Tighten securely.
3. Install BLUE supply air line tubing (Figure 2, Item 1) on primary air tank limit valve (Figure 2, Item 2).

END OF TASK

FOLLOW-ON MAINTENANCE

1. Turn MAIN POWER switch on (TM 9-2355-106-10).
2. Start engine, refill air tanks (TM 9-2355-106-10).
3. Inspect for air leaks (TM 9-2355-106-10).
4. Remove wheel chocks (TM 9-2355-106-10).
5. Test drive vehicle to verify brake system operation (TM 9-2355-106-10).
6. Set parking brake (TM 9-2355-106-10).
7. Set transmission in NEUTRAL (N) (TM 9-2355-106-10).
8. Turn engine off (TM 9-2355-106-10).
9. Turn MAIN POWER switch off (TM 9-2355-106-10).
10. Install wheel chocks (TM 9-2355-106-10).
11. Install belly armor (WP 0606).
12. Removel wheel chocks (TM 9-2355-106-10).

END OF TASK

END OF WORK PACKAGE

FIELD MAINTENANCE

BRAKE PEDAL REMOVAL AND INSTALLATION

INITIAL SETUP:

Tools and Special Tools
General Mechanic's Tool Kit (GMTK) (WP 0795, Item 37)
Wrench, torque, 20-100 lb-ft, 3/8-inch drive (WP 0795, Item 141)

Materials/Parts
Pin, cotter (WP 0796, Item 28)

References
TM 9-2355-106-10
TM 9-2355-106-23P
WP 0782

Equipment Condition
Parking brake set (TM 9-2355-106-10)
Transmission set in NEUTRAL (N) (TM 9-2355-106-10)
Engine off (TM 9-2355-106-10)
MAIN POWER switch off (TM 9-2355-106-10)
Wheels chocked (TM 9-2355-106-10)

REMOVAL

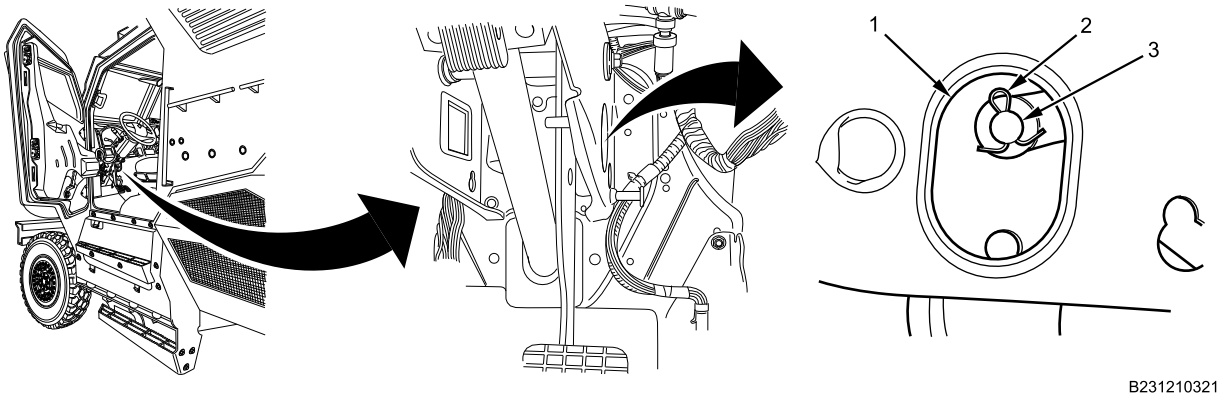

Figure 1. Brake Pedal Yoke Pin Cotter Pin.

1. Remove brake pedal cotter pin (Figure 1, Item 2) from yoke pin (Figure 1, Item 3) through Driver Control Module (DCM) right side access opening (Figure 1, Item 1). Discard cotter pin (Figure 1, Item 2).

BRAKE PEDAL REMOVAL AND INSTALLATION - (CONTINUED)

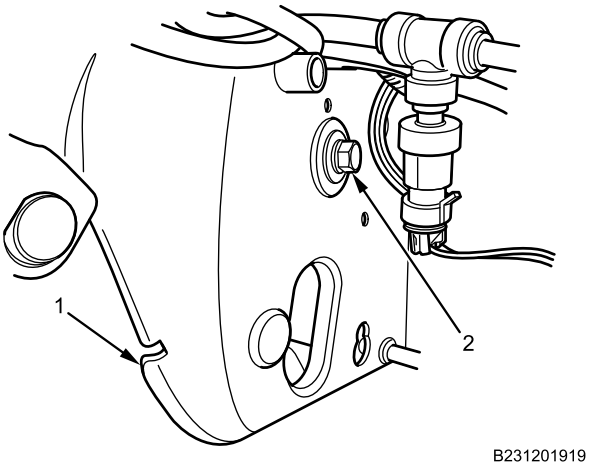

Figure 2. Brake Pedal Pivot Bolt.

2. Remove brake pedal pivot bolt and washer (Figure 2, Item 2) from DCM (Figure 2, Item 1).

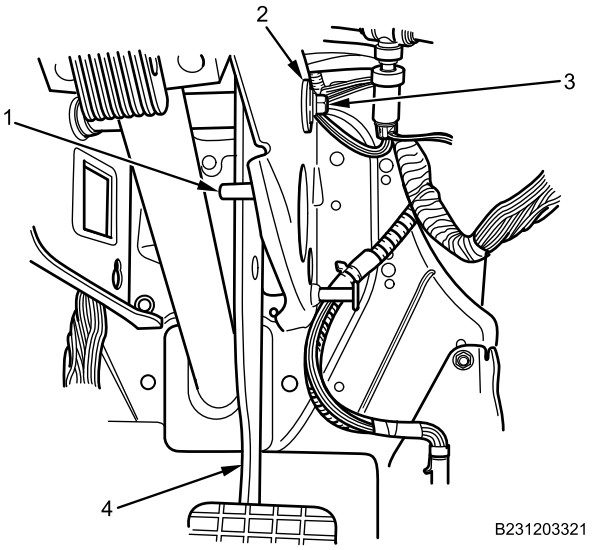

Figure 3. Brake Pedal Pivot.

3. Remove brake pedal pivot shaft (Figure 3, Item 3) from DCM bushing (Figure 3, Item 2).

BRAKE PEDAL REMOVAL AND INSTALLATION - (CONTINUED)

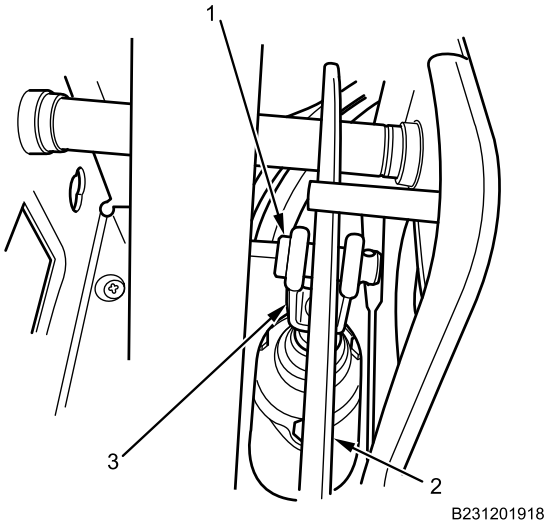

Figure 4. Brake Pedal Yoke Pin.

4. Reposition brake pedal (Figure 4, Item 2) for clearance to remove brake pedal yoke pin (Figure 4, Item 1).
5. Remove brake pedal yoke pin (Figure 4, Item 1) from brake pedal (Figure 4, Item 2) and DCM air brake valve assembly pushrod (Figure 4, Item 3).
6. Remove brake pedal (Figure 3, Item 4) from DCM through area above brake pedal stop (Figure 3, Item 1).

END OF TASK

INSTALLATION

1. Install brake pedal (Figure 3, Item 4) on DCM through area above brake pedal stop (Figure 3, Item 1).
2. Install brake pedal yoke pin (Figure 4, Item 1) through DCM air brake valve assembly pushrod (Figure 4, Item 3) and brake pedal (Figure 4, Item 2).
3. Install brake pedal pivot shaft (Figure 3, Item 3) through DCM bushing (Figure 3, Item 2) and brake pedal (Figure 3, Item 4).

BRAKE PEDAL REMOVAL AND INSTALLATION - (CONTINUED)

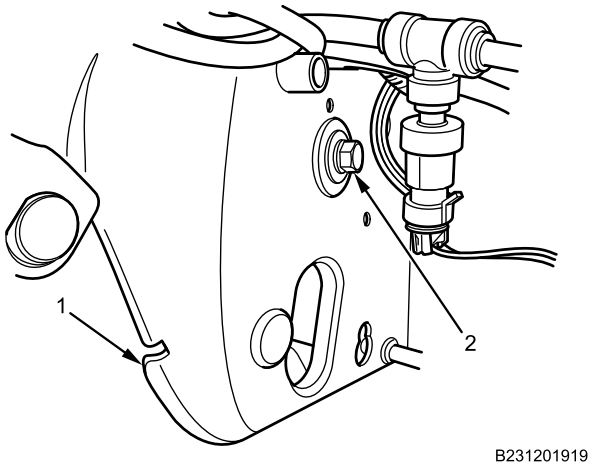

Figure 5. Brake Pedal Pivot Bolt.

4. Install brake pedal pivot washer and bolt (Figure 5, Item 2) on DCM (Figure 5, Item 1) and torque to 21-27 lb-ft (29-37 N•m).

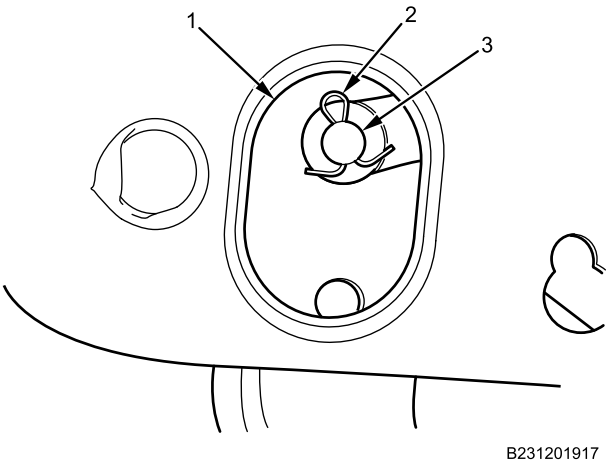

Figure 6. Brake Pedal Yoke Pin Cotter Pin.

5. Install new brake pedal cotter pin (Figure 6, Item 2) on yoke pin (Figure 6, Item 3) through DCM right side access opening (Figure 6, Item 1).
6. Bend ends of cotter pin around yoke pin (Refer to figure 6).

END OF TASK

FOLLOW-ON MAINTENANCE

1. Turn MAIN POWER switch on (TM 9-2355-106-10).
2. Start engine and allow air brake system pressure to build to normal range (TM 9-2355-106-10).
3. Remove wheel chocks (TM 9-2355-106-10).
4. Test drive to verify proper brake operation (TM 9-2355-106-10).
5. Set parking brake (TM 9-2355-106-10).
6. Set transmission set in NEUTRAL (N) (TM 9-2355-106-10).
7. Turn engine off (TM 9-2355-106-10).

BRAKE PEDAL REMOVAL AND INSTALLATION - (CONTINUED)

8. Turn MAIN POWER switch off (TM 9-2355-106-10).

END OF TASK

END OF WORK PACKAGE

FIELD MAINTENANCE

FOOT BRAKE VALVE REMOVAL AND INSTALLATION

INITIAL SETUP:

Tools and Special Tools
General Mechanic's Tool Kit (GMTK) (WP 0795, Item 37)

Materials/Parts
Grease (WP 0794, Item 21)
Pin, cotter (WP 0796, Item 21)

References
TM 9-2355-106-10
TM 9-2355-106-23P
WP 0782

Equipment Condition
Parking brake set (TM 9-2355-106-10)
Transmission set in NEUTRAL (N) (TM 9-2355-106-10)
Engine off (TM 9-2355-106-10)
MAIN POWER switch off (TM 9-2355-106-10)
Wheels chocked (TM 9-2355-106-10)
Engine hood open and secure (TM 9-2355-106-10)
Driver Control Mounting (DCM) bracket assembly exterior armor removed (WP 0646)

WARNING

Do not use cabin door handles as hand grip to enter or exit vehicle cabin. Use of any cabin door handle as hand grip may cause air-assisted door to open or close. Failure to comply may result in injury or death to personnel.

Cabin door must be secured in the open position by using heavy duty straps to prevent accidental closure during vehicle maintenance. Pull check link retaining pin prior to securing door open. Failure to comply may result in serious injury or death to personnel.

Engine hood is extremely heavy and requires two-person lift. Ensure that there is adequate space in front of the vehicle to open hood completely without pinning or pinching personnel between hood and any other structure. Use extreme care when working under hood and make sure it is properly supported. Failure to comply may result in serious injury or death to personnel.

Do not operate vehicle with air pressure system loss. Vehicle has reduced or no braking capability and may not stop. Failure to comply may result in damage to equipment and serious injury or death to personnel.

Let air pressure build in both tanks to 100 psi (689 kPa) before releasing the parking brake. Low air pressure may affect vehicle braking capability. Failure to comply may result in injury or death to personnel.

FOOT BRAKE VALVE REMOVAL AND INSTALLATION - (CONTINUED)

REMOVAL

1. Disconnect air line union (Figure 1, Item 1) from BLACK exhaust air line (Figure 1, Item 2).

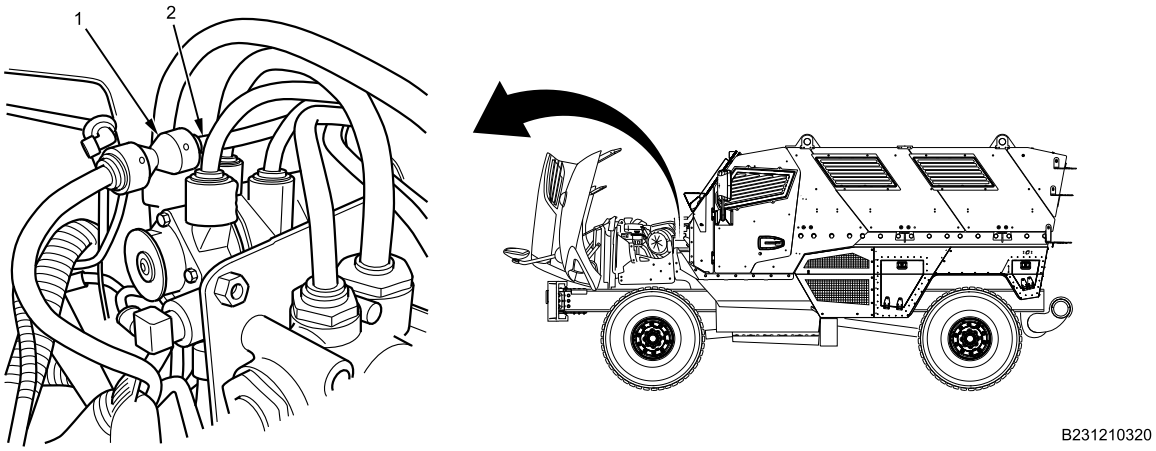

Figure 1. Exhaust Air Line.

2. Disconnect small GREEN air line (Figure 2, Item 2) from foot brake valve (Figure 2, Item 1).

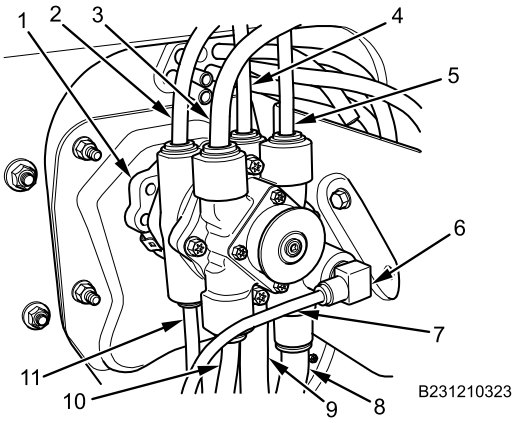

Figure 2. Foot Brake Valve Air Lines.

3. Disconnect large ORANGE air line (Figure 2, Item 3) from foot brake valve (Figure 2, Item 1).
4. Disconnect small GREEN air line (Figure 2, Item 4) from foot brake valve (Figure 2, Item 1).
5. Disconnect small ORANGE air line (Figure 2, Item 5) from foot brake valve (Figure 2, Item 1).
6. Disconnect small BLACK air line (Figure 2, Item 7) from angle fitting (Figure 2, Item 6) in foot brake valve (Figure 2, Item 1).
7. Disconnect large ORANGE air line (Figure 2, Item 8) from foot brake valve (Figure 2, Item 1).
8. Disconnect large GREEN air line (Figure 2, Item 9) from foot brake valve (Figure 2, Item 1).
9. Disconnect small ORANGE air line (Figure 2, Item 10) from foot brake valve (Figure 2, Item 1).
10. Disconnect small GREEN air line (Figure 2, Item 11) from foot brake valve (Figure 2, Item 1).

FOOT BRAKE VALVE REMOVAL AND INSTALLATION - (CONTINUED)

11. Remove brake pedal cotter pin (Figure 3, Item 2) from yoke pin (Figure 3, Item 3) through DCM right side access opening (Figure 3, Item 1). Discard cotter pin.

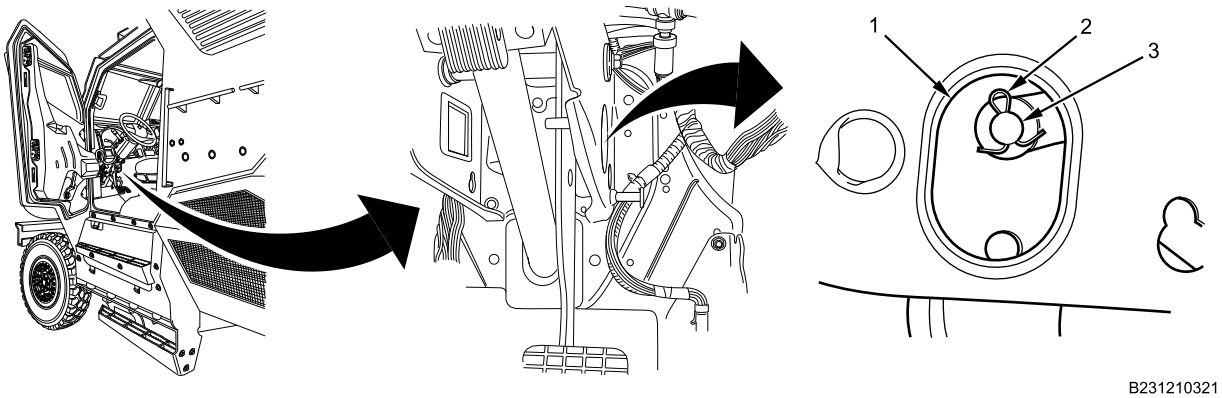

Figure 3. Brake Pedal Cotter Pin.

12. Remove brake pedal yoke pin (Figure 4, Item 1) from brake pedal (Figure 4, Item 2) and DCM air brake valve assembly pushrod (Figure 4, Item 3).

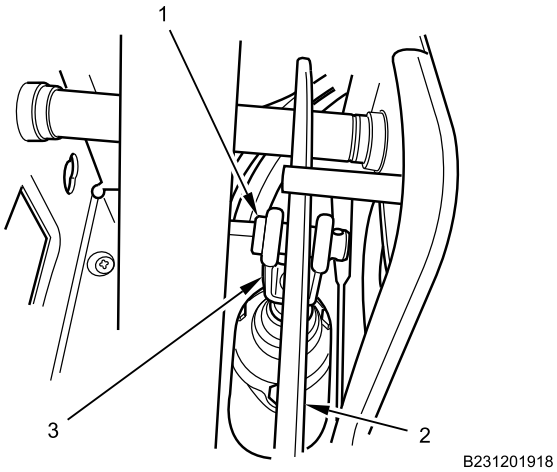

Figure 4. Brake Pedal Yoke Pin.

FOOT BRAKE VALVE REMOVAL AND INSTALLATION - (CONTINUED)

13. Remove four nuts (Figure 5, Item 2) and foot brake valve bracket (Figure 5, Item 1) from DCM bracket studs (Figure 5, Item 3).

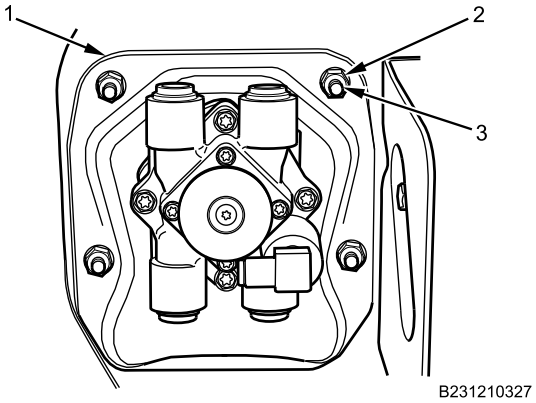

Figure 5. Foot Brake Valve and Bracket.

END OF TASK

DISASSEMBLY

1. Remove gasket (Figure 6, Item 6) and three nuts (Figure 6, Item 3) from three studs (Figure 6, Item 4).

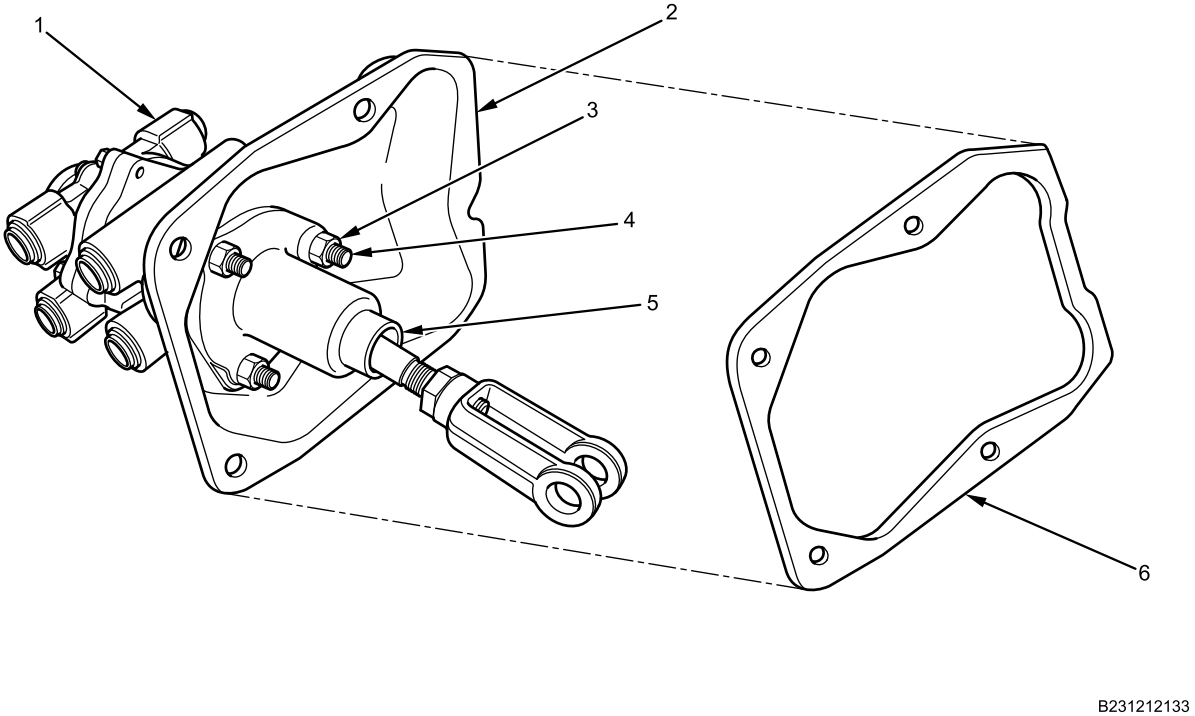

Figure 6. Foot Brake Valve, Bracket, and Yoke Assembly.

2. Separate foot brake valve (Figure 6, Item 1) from foot brake valve bracket (Figure 6, Item 2) and yoke assembly (Figure 6, Item 5).

FOOT BRAKE VALVE REMOVAL AND INSTALLATION - (CONTINUED)

3. Remove air line fitting (Figure 7, Item 2) from foot brake valve (Figure 7, Item 1).

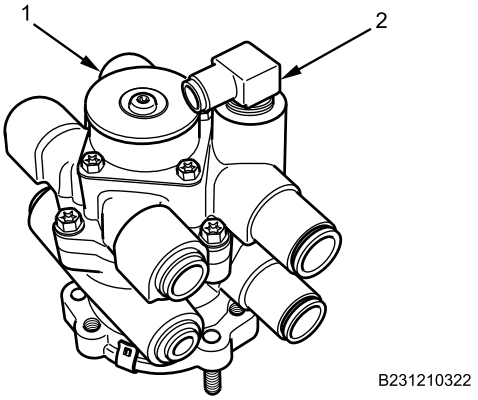

Figure 7. Foot Brake Valve Lower Fittings.

END OF TASK

ASSEMBLY

NOTE

Apply lubricant to yoke assembly prior to installation.

1. Install air line fitting (Figure 7, Item 2) on foot brake valve (Figure 7, Item 1) and tighten securely.

FOOT BRAKE VALVE REMOVAL AND INSTALLATION - (CONTINUED)

2. Assemble foot brake valve (Figure 8, Item 1) on foot brake valve bracket (Figure 8, Item 2) with gasket (Figure 8, Item 6) and yoke assembly (Figure 8, Item 5).

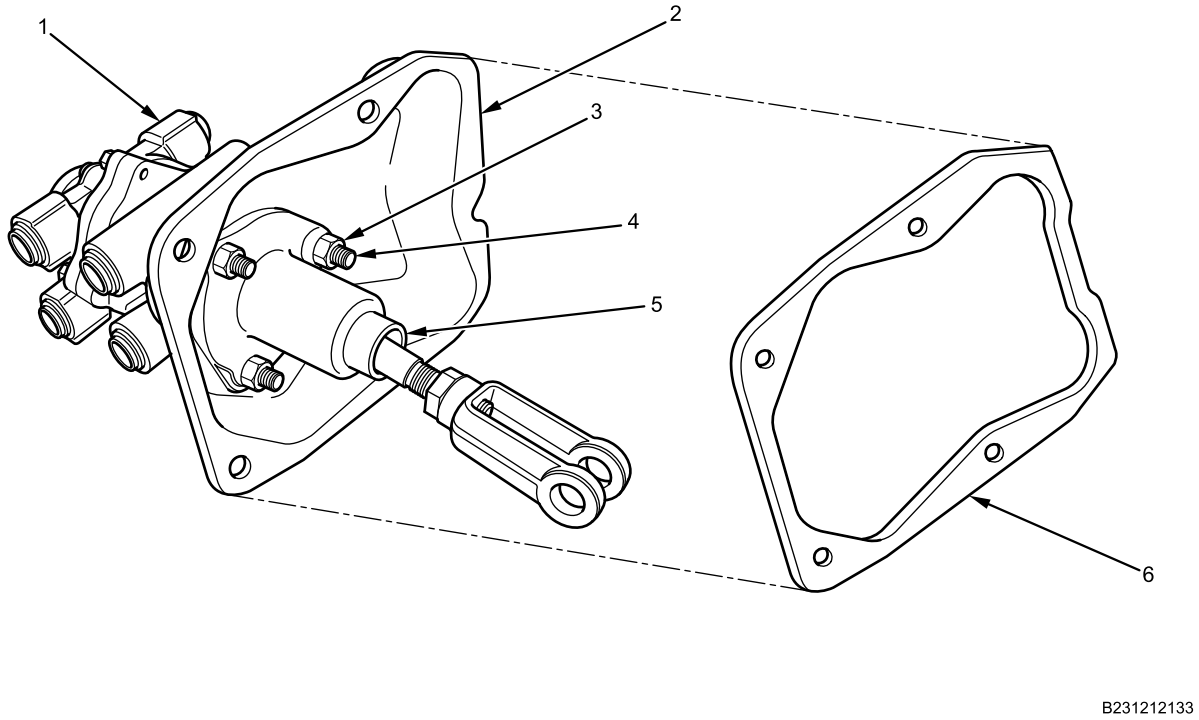

Figure 8. Foot Brake Valve, Bracket, and Yoke Assembly.

3. Install three nuts (Figure 8, Item 3) on three studs (Figure 8, Item 4) and tighten securely.

END OF TASK

INSTALLATION

NOTE

Apply lubricant to yoke assembly prior to installation.

1. Install foot brake valve bracket (Figure 9, Item 1) and four nuts (Figure 9, Item 2) on DCM bracket studs (Figure 9, Item 3). Tighten nuts (Figure 9, Item 2) securely.

FOOT BRAKE VALVE REMOVAL AND INSTALLATION - (CONTINUED)

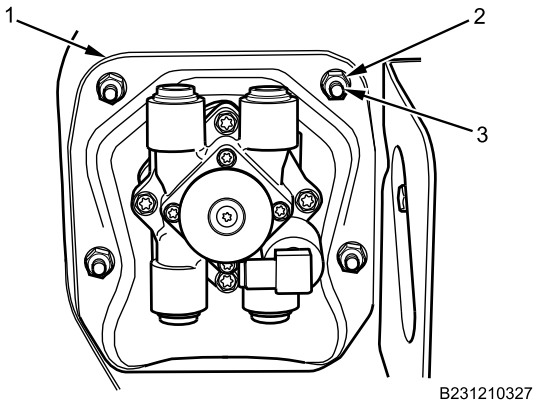

Figure 9. Foot Brake Valve and Bracket.

2. Install brake pedal yoke pin (Figure 10, Item 1) through DCM air brake valve assembly pushrod (Figure 10, Item 3) and brake pedal (Figure 10, Item 2).

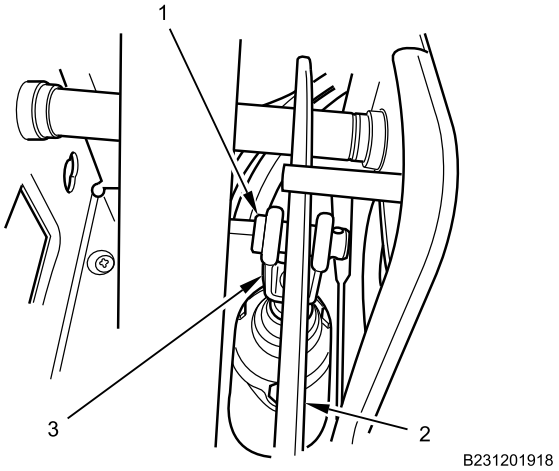

Figure 10. Brake Pedal Yoke Pin.

FOOT BRAKE VALVE REMOVAL AND INSTALLATION - (CONTINUED)

3. Install new brake pedal cotter pin (Figure 11, Item 2) on yoke pin (Figure 11, Item 3) through DCM right side access opening (Figure 11, Item 1). Bend ends of cotter pin around yoke pin.

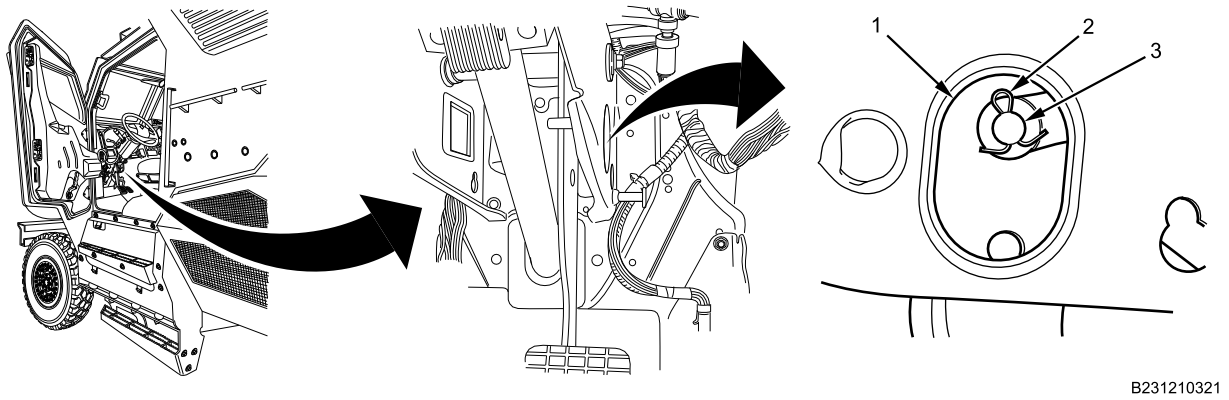

Figure 11. Brake Pedal Yoke Cotter Pin.

4. Connect small GREEN air line (Figure 12, Item 10) on foot brake valve (Figure 12, Item 1).

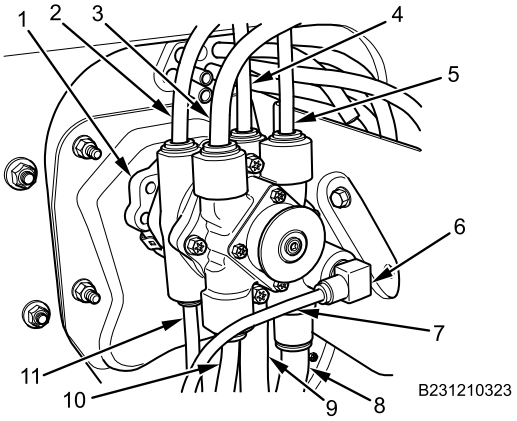

Figure 12. Foot Brake Valve Air Lines.

5. Connect small ORANGE air line (Figure 12, Item 9) on foot brake valve (Figure 12, Item 1).
6. Connect large GREEN air line (Figure 12, Item 8) on foot brake valve (Figure 12, Item 1).
7. Connect large ORANGE air line (Figure 12, Item 7) on foot brake valve (Figure 12, Item 1).
8. Connect small BLACK air line (Figure 12, Item 6) on angle fitting (Figure 12, Item 6) in foot brake valve (Figure 12, Item 1).
9. Connect small ORANGE air line (Figure 12, Item 5) on foot brake valve (Figure 12, Item 1).
10. Connect small GREEN air line (Figure 12, Item 4) on foot brake valve (Figure 12, Item 1).
11. Connect large ORANGE air line (Figure 12, Item 3) on foot brake valve (Figure 12, Item 1).
12. Connect small GREEN air line (Figure 12, Item 2) on foot brake valve (Figure 12, Item 1).

FOOT BRAKE VALVE REMOVAL AND INSTALLATION - (CONTINUED)

13. Connect air line union (Figure 13, Item 1) on BLACK exhaust air line (Figure 13, Item 2).

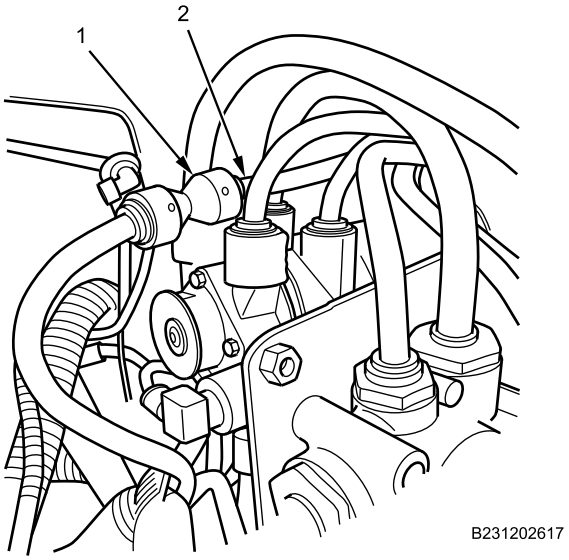

Figure 13. Exhaust Air Line.

END OF TASK

FOLLOW-ON MAINTENANCE

1. Install DCM bracket assembly exterior armor (WP 0646).
2. Close and secure engine hood (TM 9-2355-106-10).
3. Turn MAIN POWER switch on (TM 9-2355-106-10).
4. Remove wheel chocks (TM 9-2355-106-10).
5. Test-drive vehicle to verify brake system operation (TM 9-2355-106-10).
6. Set transmission in NEUTRAL (N) (TM 9-2355-106-10).
7. Set vehicle parking brake (TM 9-2355-106-10).
8. Turn engine off (TM 9-2355-106-10).
9. Turn MAIN POWER switch off (TM 9-2355-106-10).

END OF TASK

END OF WORK PACKAGE

FIELD MAINTENANCE

TRACTOR PROTECTION VALVE REMOVAL AND INSTALLATION

INITIAL SETUP:

Tools and Special Tools
General Mechanic's Tool Kit (GMTK) (WP 0795, Item 37)

References
TM 9-2355-106-10
TM 9-2355-106-23P
WP 0782

Equipment Condition
Parking brake set (TM 9-2355-106-10)
Transmission set in NEUTRAL (N) (TM 9-2355-106-10)
Engine off (TM 9-2355-106-10)
MAIN POWER switch off (TM 9-2355-106-10)
Wheels chocked (TM 9-2355-106-10)
Engine hood open and secured (TM 9-2355-106-10)
Air pressure drained from all air brake reservoirs (TM 9-2355-106-10)
Driver control mounting bracket assembly exterior armor removed (WP 0646)

REMOVAL

WARNING

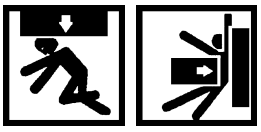

Engine hood is extremely heavy and requires two-person lift. Ensure that there is adequate space in front of the vehicle to open hood completely without pinning or pinching personnel between hood and any other structure. Use extreme care when working under hood and make sure it is properly supported. Failure to comply may result in serious injury or death to personnel.

TRACTOR PROTECTION VALVE REMOVAL AND INSTALLATION - (CONTINUED)

1. Disconnect door actuator supply tee (Figure 1, Item 2) from BLUE door actuator supply air line (Figure 1, Item 3) at left air line grommet (Figure 1, Item 1) inside cabin.

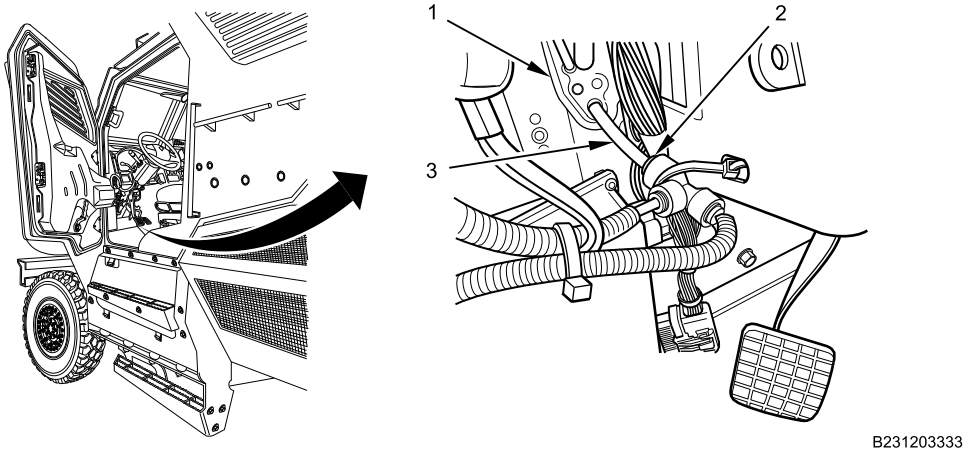

Figure 1. Door Actuator Air Line Supply.

2. Disconnect supply air line union (Figure 2, Item 2) from YELLOW supply air line (Figure 2, Item 3) at left air line grommet (Figure 2, Item 4) outside cabin.

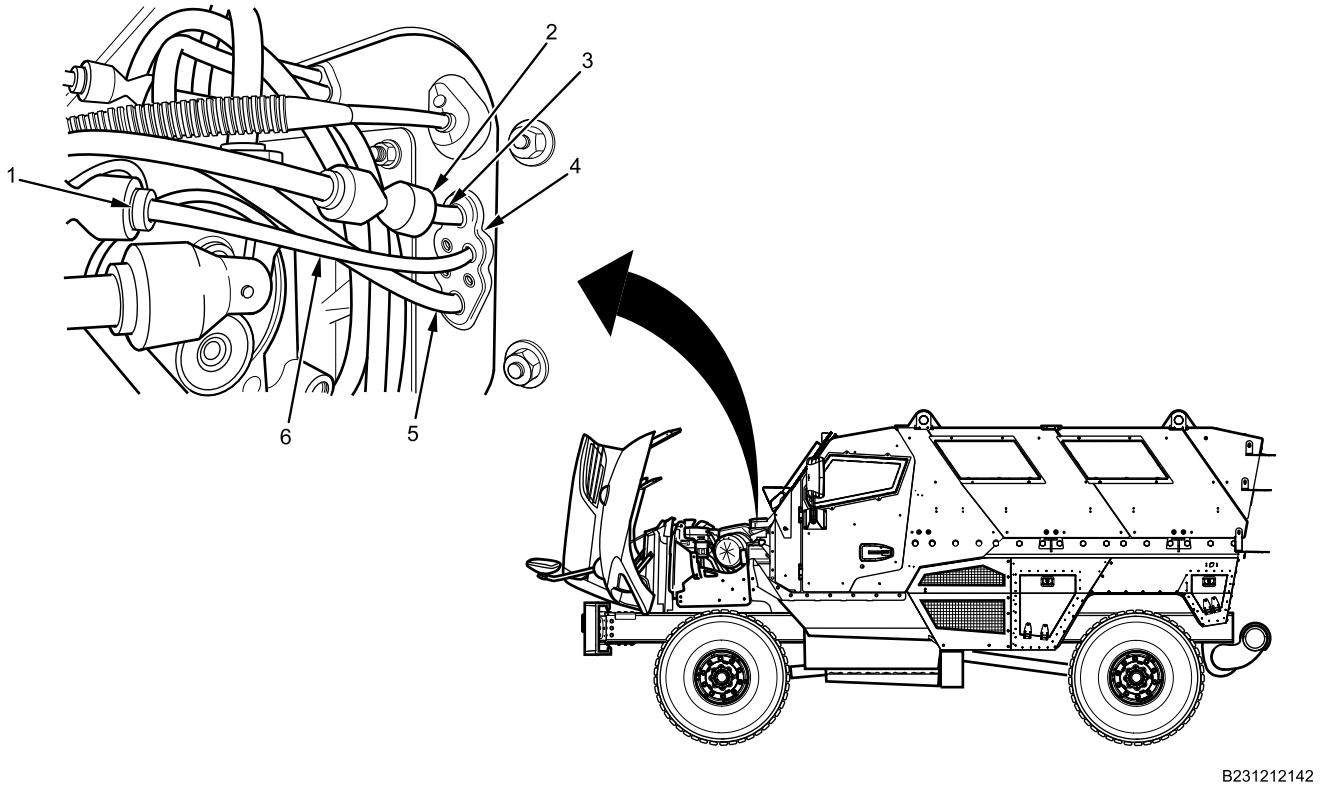

Figure 2. Exterior Air Lines.

3. Disconnect air line union (Figure 2, Item 1) from BLACK air cleaner restriction gauge vacuum line (Figure 2, Item 6) at left air line grommet (Figure 2, Item 4) outside cabin.
4. Remove BLUE door actuator supply air line (Figure 2, Item 5) from left air line grommet (Figure 2, Item 4) outside cabin.

TRACTOR PROTECTION VALVE REMOVAL AND INSTALLATION - (CONTINUED)

5. Disconnect small BLUE stop light switch supply air line (Figure 3, Item 2) from tractor protection valve (Figure 3, Item 1).

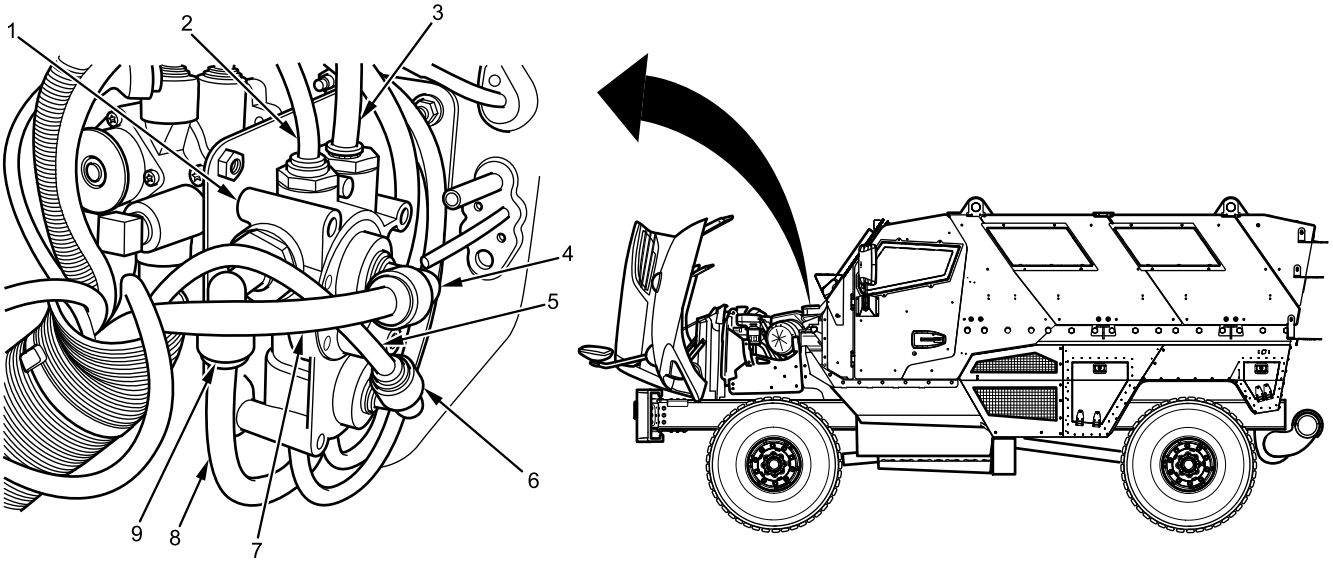

B231212143

Figure 3. Tractor Protection Valve Upper Air Lines.

6. Disconnect large GREEN air line (Figure 3, Item 3) from tractor protection valve (Figure 3, Item 1).
7. Disconnect large BLUE air line (Figure 3, Item 7) from angle fitting (Figure 3, Item 4) in tractor protection valve (Figure 3, Item 1).
8. Disconnect angle fitting (Figure 3, Item 4) from tractor protection valve (Figure 3, Item 1).
9. Disconnect small RED air line (Figure 3, Item 5) from angle fitting (Figure 3, Item 6) in tractor protection valve (Figure 3, Item 1).
10. Disconnect angle fitting (Figure 3, Item 6) from tractor protection valve (Figure 3, Item 1).
11. Disconnect large ORANGE air line (Figure 3, Item 8) from angle fitting (Figure 3, Item 9) in tractor protection valve (Figure 3, Item 1).
12. Disconnect angle fitting (Figure 3, Item 9) from tractor protection valve (Figure 3, Item 1).

TRACTOR PROTECTION VALVE REMOVAL AND INSTALLATION - (CONTINUED)

13. Disconnect RED trailer and transport delivery air line (Figure 4, Item 3) and GREEN delivery air line (Figure 4, Item 2) from tractor protection valve (Figure 4, Item 1).

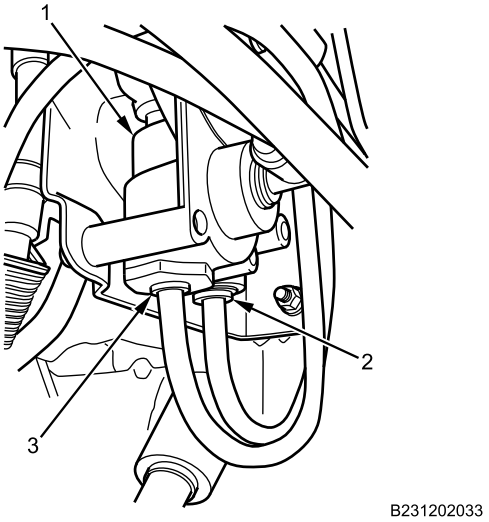

Figure 4. Tractor Protection Valve Lower Air Lines.

14. Remove tractor protection valve bracket nuts (Figure 5, Item 1 and 3) and tractor protection valve bracket (Figure 5, Item 2) from driver control mounting bracket studs (Figure 5, Item 4).

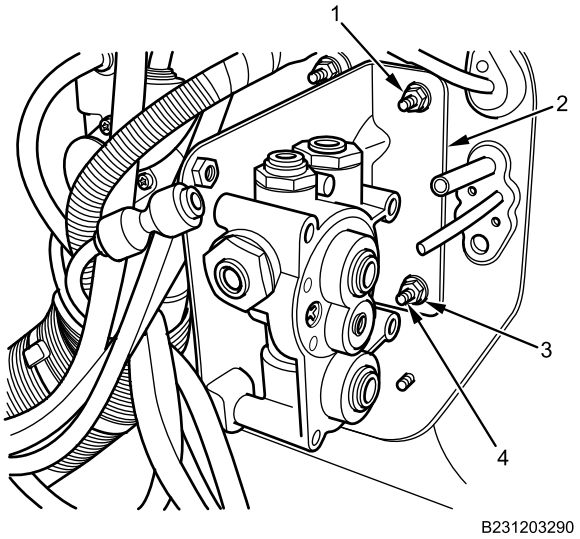

Figure 5. Tractor Protection Valve and Bracket.

END OF TASK

TRACTOR PROTECTION VALVE REMOVAL AND INSTALLATION - (CONTINUED)

DISASSEMBLY

1. Remove tractor protection valve bolts (Figure 6, Item 3) and tractor protection valve (Figure 6, Item 2) from tractor protection valve bracket (Figure 6, Item 1).

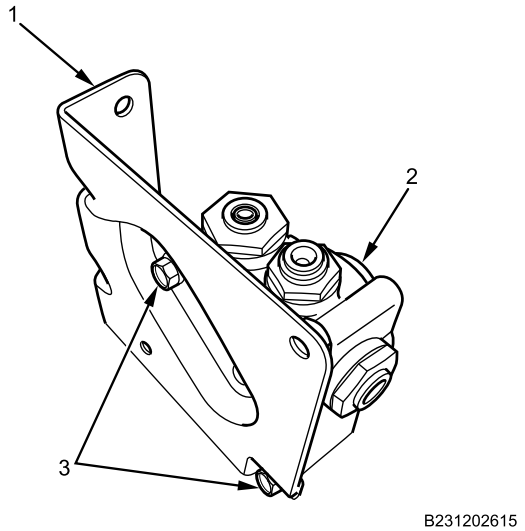

Figure 6. Tractor Protection Valve Bracket.

2. Remove the air line connector fittings (Figure 7, Item 2, 3, 4, 5, 6, 7 and 8) from tractor protection valve (Figure 7, Item 1).

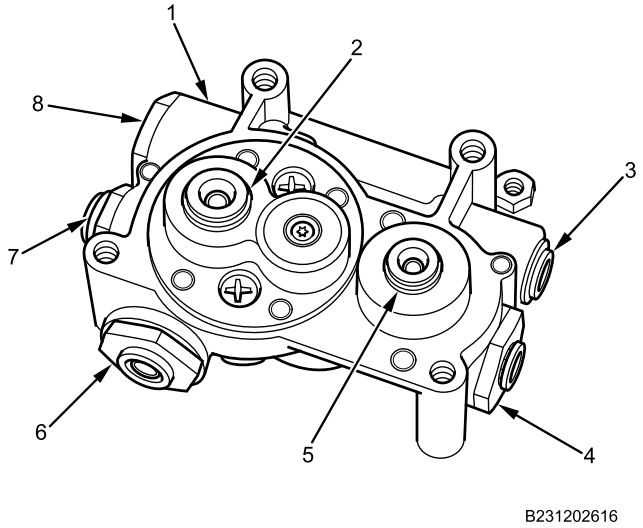

Figure 7. Tractor Protection Valve Fittings.

END OF TASK

TRACTOR PROTECTION VALVE REMOVAL AND INSTALLATION - (CONTINUED)

ASSEMBLY

1. Install the air line connector fittings (Figure 8, Item 2, 3, 4, 5, 6, 7 and 8) on tractor protection valve (Figure 8, Item 1) and tighten securely.

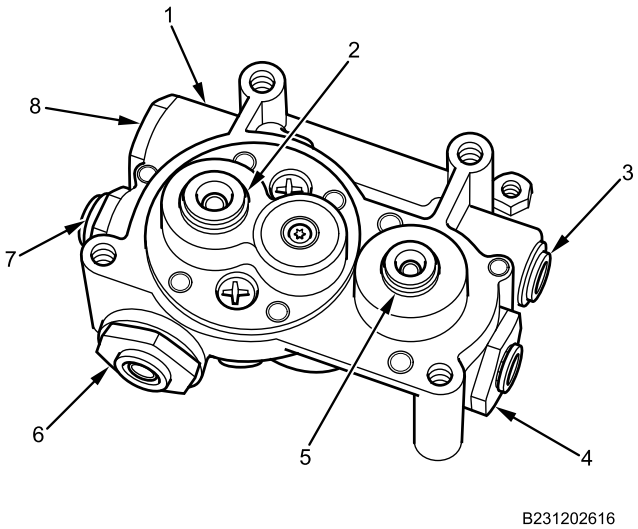

Figure 8. Tractor Protection Valve Fittings.

2. Install tractor protection valve (Figure 9, Item 2) and tractor protection valve bolts (Figure 9, Item 3) on tractor protection valve bracket (Figure 9, Item 1). Tighten bolts (Figure 9, Item 3) securely.

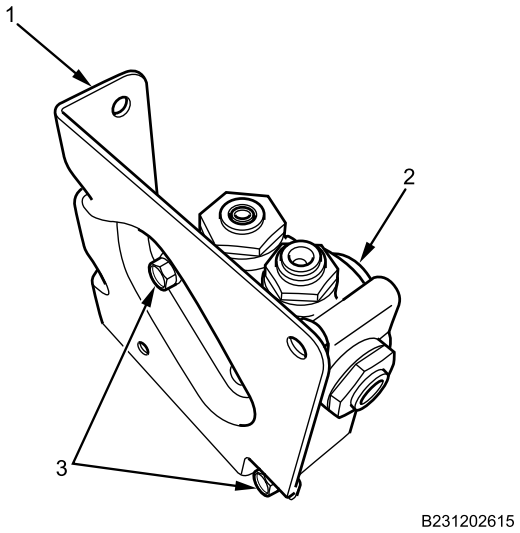

Figure 9. Tractor Protection Valve Bracket.

END OF TASK

TRACTOR PROTECTION VALVE REMOVAL AND INSTALLATION - (CONTINUED)

INSTALLATION

1. Install tractor protection valve bracket (Figure 10, Item 2) and tractor protection valve bracket nuts (Figure 10, Item 1 and 3) on driver control mounting bracket studs (Figure 10, Item 4). Tighten nuts (Figure 10, Item 3) securely.

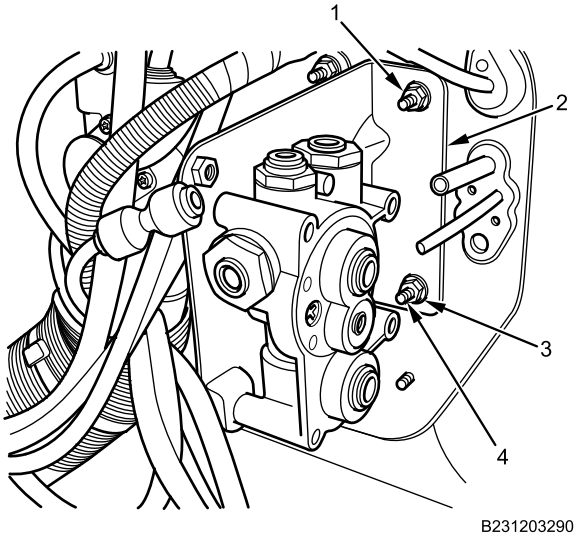

Figure 10. Tractor Protection Valve and Bracket.

2. Connect GREEN delivery air line (Figure 11, Item 2) and RED trailer and transport delivery air line (Figure 11, Item 3) on tractor protection valve (Figure 11, Item 1).

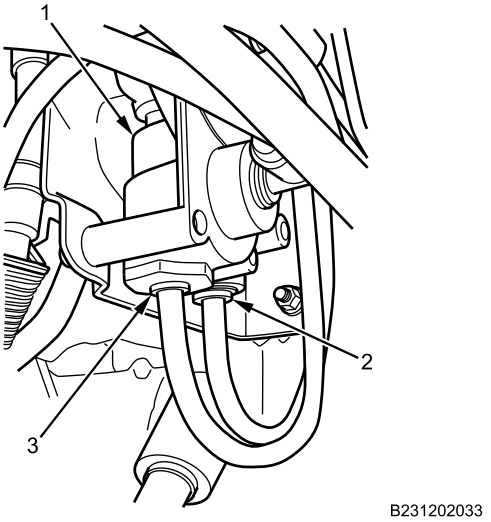

Figure 11. Tractor Protection Valve Lower Air Lines.

TRACTOR PROTECTION VALVE REMOVAL AND INSTALLATION - (CONTINUED)

3. Connect angle fitting (Figure 12, Item 9) on tractor protection valve (Figure 12, Item 1).

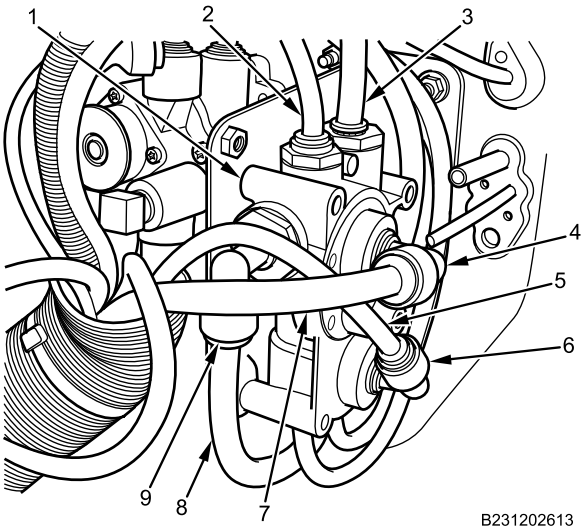

Figure 12. Tractor Protection Valve Upper Air Lines.

4. Connect large ORANGE air line (Figure 12, Item 8) on angle fitting (Figure 12, Item 9).
5. Connect angle fitting (Figure 12, Item 6) on tractor protection valve (Figure 12, Item 1).
6. Connect small RED air line (Figure 12, Item 5) on angle fitting (Figure 12, Item 6).
7. Connect angle fitting (Figure 12, Item 4) on tractor protection valve (Figure 12, Item 1).
8. Connect large BLUE air line (Figure 12, Item 7) on angle fitting (Figure 12, Item 4).
9. Connect large GREEN air line (Figure 12, Item 3) on tractor protection valve (Figure 12, Item 1).
10. Connect small BLUE stop light switch supply air line (Figure 12, Item 2) on tractor protection valve (Figure 12, Item 1).

TRACTOR PROTECTION VALVE REMOVAL AND INSTALLATION - (CONTINUED)

11. Install BLUE door actuator supply air line (Figure 13, Item 5) on left air line grommet (Figure 13, Item 4) outside cabin.

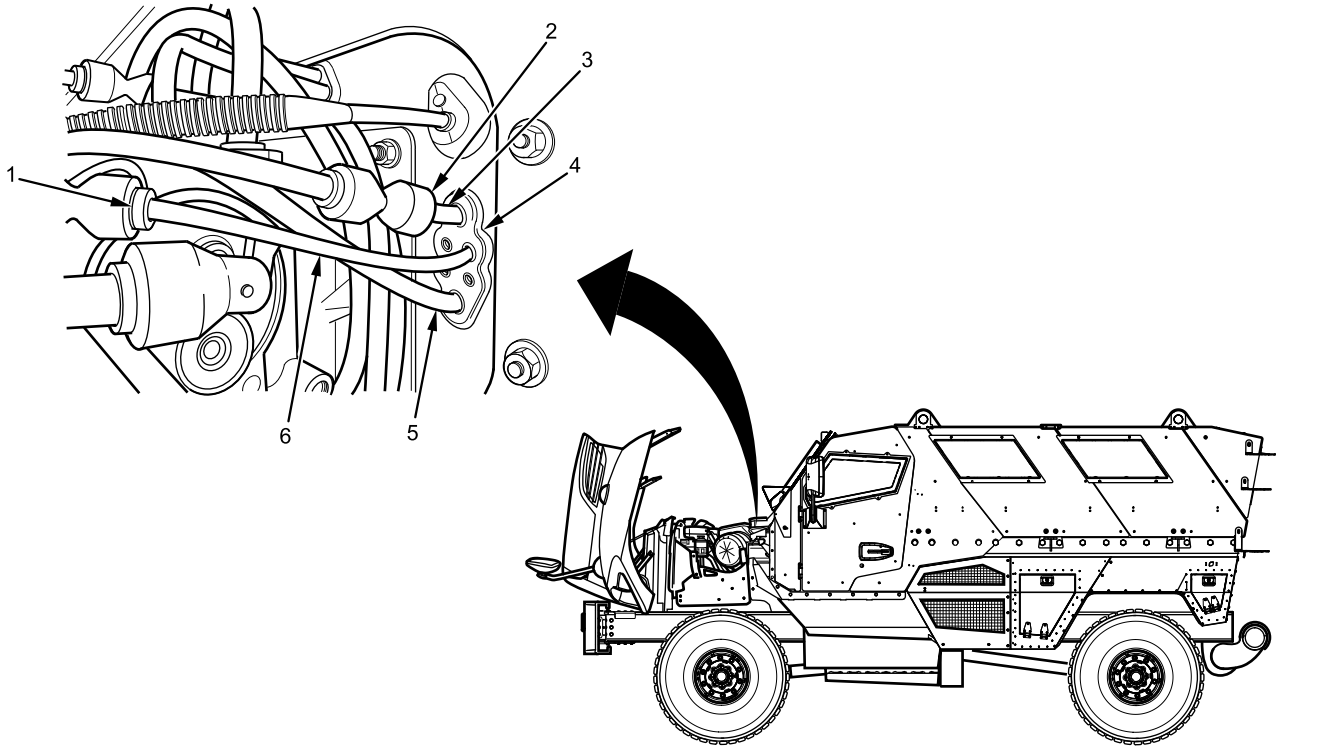

Figure 13. Exterior Air Lines.

12. Connect air line union (Figure 13, Item 1) on BLACK air cleaner restriction gauge vacuum line (Figure 13, Item 6) at left air line grommet (Figure 13, Item 4) outside cabin.
13. Connect supply air line union (Figure 13, Item 2) on YELLOW supply air line (Figure 13, Item 3) at left air line grommet (Figure 13, Item 4) outside cabin.

TRACTOR PROTECTION VALVE REMOVAL AND INSTALLATION - (CONTINUED)

14. Connect door actuator supply tee (Figure 14, Item 2) on BLUE door actuator supply air line (Figure 14, Item 3) at left air line grommet (Figure 14, Item 1) inside cabin.

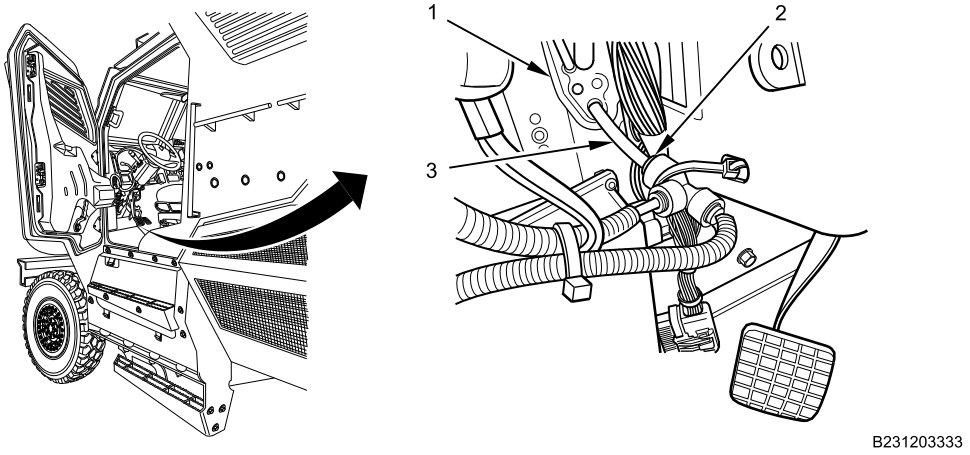

Figure 14. Door Actuator Air Line Supply.

END OF TASK

FOLLOW-ON MAINTENANCE

1. Install driver control mounting bracket assembly exterior armor (WP 0646).
2. Close and secure engine hood (TM 9-2355-106-10).
3. Turn MAIN POWER switch on (TM 9-2355-106-10).
4. Start engine and allow air brake system pressure to build to normal range (TM 9-2355-106-10).
5. Remove wheel chocks (TM 9-2355-106-10).
6. Test drive to verify proper brake operation (TM 9-2355-106-10).
7. Set parking brake (TM 9-2355-106-10).
8. Set transmission set in NEUTRAL (N) (TM 9-2355-106-10).
9. Turn engine off (TM 9-2355-106-10).
10. Turn MAIN POWER switch off (TM 9-2355-106-10).

END OF TASK

END OF WORK PACKAGE

FIELD MAINTENANCE

UPPER AIR LINE GROMMET REMOVAL AND INSTALLATION

INITIAL SETUP:

Tools and Special Tools
General Mechanic's Tool Kit (GMTK) (WP 0795, Item 37)

References
TM 9-2355-106-10
TM 9-2355-106-23P
WP 0782

Equipment Condition
Parking brake set (TM 9-2355-106-10)
Transmission set in NEUTRAL (N) (TM 9-2355-106-10)
Engine shut off (TM 9-2355-106-10)
MAIN POWER switch off (TM 9-2355-106-10)
Wheels chocked (TM 9-2355-106-10)
Engine hood open and secured (TM 9-2355-106-10)
Air pressure drained from all air brake reservoirs (TM 9-2355-106-10)
Disconnect battery cables (WP 0404)
Driver Control Module (DCM) mounting bracket assembly exterior armor removed (WP 0646) and (WP 0647)
Brake pedal removed (WP 0501)
Steering column removed (WP 0533)

REMOVAL

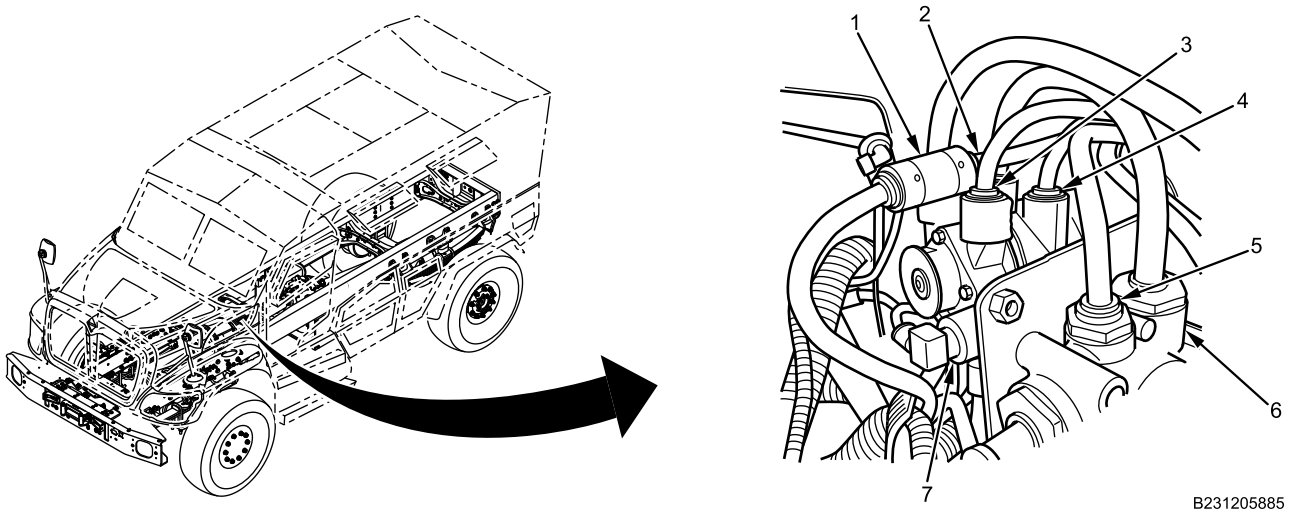

Figure 1. Dual Brake Valve and Tractor Protection Valve Upper Air Lines.

1. Disconnect exhaust air line union (Figure 1, Item 1) from BLACK exhaust line (Figure 1, Item 2).
2. Disconnect ORANGE supply air line (Figure 1, Item 3) and GREEN supply air line (Figure 1, Item 4) from dual brake valve (Figure 1, Item 7).
3. Disconnect BLUE stoplight switch supply air line (Figure 1, Item 5) from tractor protection valve (Figure 1, Item 6).

UPPER AIR LINE GROMMET REMOVAL AND INSTALLATION - (CONTINUED)

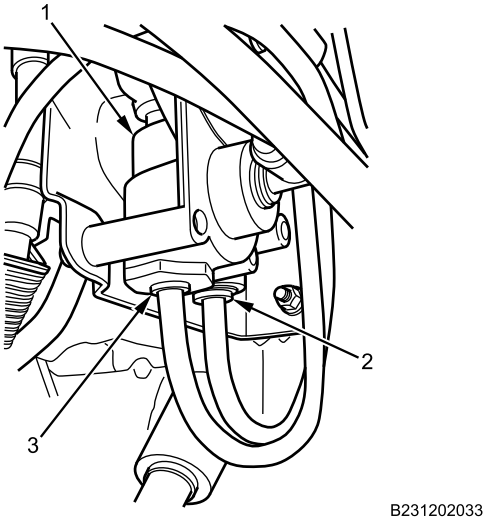

Figure 2. Tractor Protection Valve Lower Air Lines.

4. Disconnect RED trailer and transport delivery air line (Figure 2, Item 3) and GREEN delivery air line (Figure 2, Item 2) from tractor protection valve (Figure 2, Item 1).

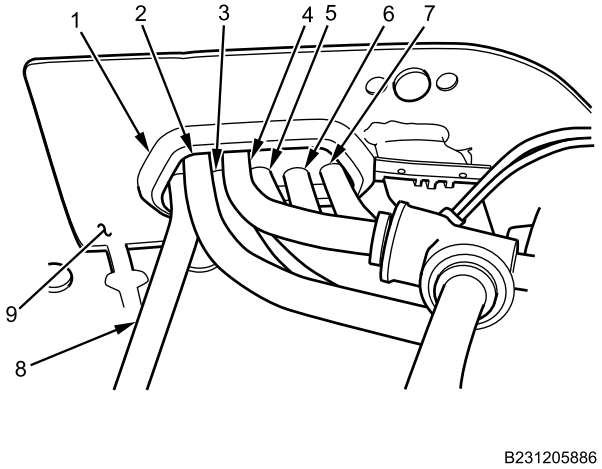

Figure 3. Interior Air Lines Inside Cabin View.

5. Remove ORANGE supply air line (Figure 3, Item 2) and GREEN supply air line (Figure 3, Item 4) from upper air line grommet (Figure 3, Item 1) inside cabin.
6. Remove BLUE supply air line (Figure 3, Item 8), GREEN delivery air line (Figure 3, Item 3), RED trailer and transport delivery air line (Figure 3, Item 5), BLACK trailer control valve exhaust line (Figure 3, Item 6), and BLACK hand brake control valve exhaust line (Figure 3, Item 7) from upper air line grommet (Figure 3, Item 1) inside cabin.
7. Remove upper air line grommet (Figure 3, Item 1) from DCM (Figure 3, Item 9) inside cabin.

END OF TASK

UPPER AIR LINE GROMMET REMOVAL AND INSTALLATION - (CONTINUED)

INSTALLATION

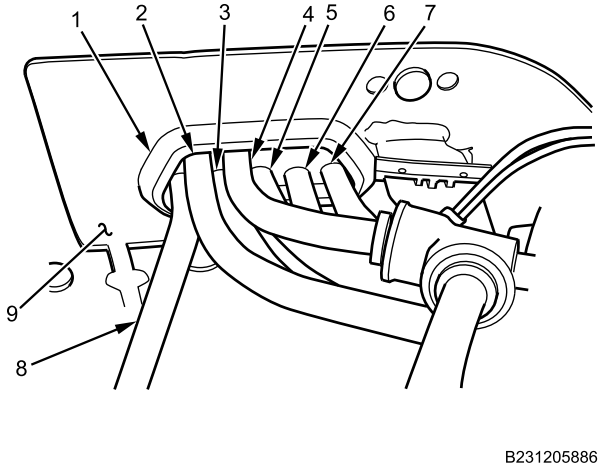

Figure 4. Interior Air Lines Inside Cabin View.

1. Install upper air line grommet (Figure 4, Item 1) on DCM (Figure 3, Item 9) inside cabin.
2. Install BLUE supply air line (Figure 4, Item 8), GREEN delivery air line (Figure 4, Item 3), RED trailer and transport delivery air line (Figure 4, Item 5), BLACK trailer control valve exhaust line (Figure 4, Item 6), and BLACK hand brake control valve exhaust line (Figure 4, Item 7) through upper air line grommet (Figure 4, Item 1) from inside cabin.
3. Install ORANGE supply air line (Figure 4, Item 2) and GREEN supply air line (Figure 4, Item 4) through upper air line grommet (Figure 4, Item 1) from inside cabin.

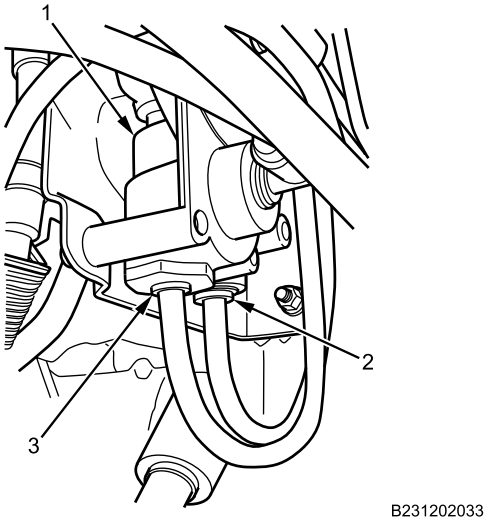

Figure 5. Tractor Protection Valve Lower Air Lines.

4. Connect GREEN delivery air line (Figure 5, Item 2) and RED trailer and transport delivery air line (Figure 5, Item 3) on tractor protection valve (Figure 5, Item 1).

UPPER AIR LINE GROMMET REMOVAL AND INSTALLATION - (CONTINUED)

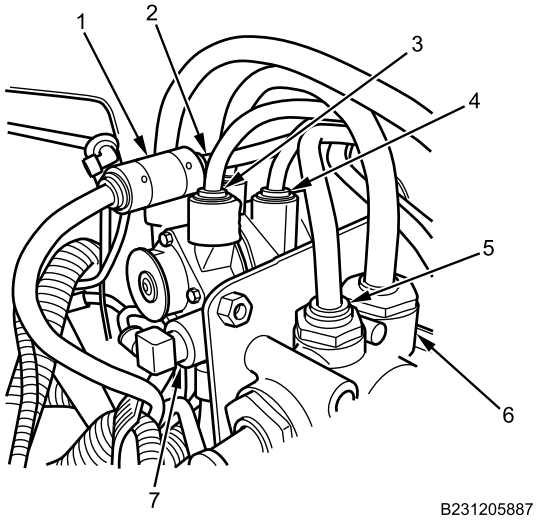

Figure 6. Dual Brake Valve and Tractor Protection Valve Upper Air Lines.

5. Connect BLUE stoplight switch supply air line (Figure 6, Item 5) on tractor protection valve (Figure 6, Item 6).
6. Connect GREEN supply air line (Figure 6, Item 4) and ORANGE supply air line (Figure 6, Item 3) on dual brake valve (Figure 6, Item 7).
7. Connect exhaust air line union (Figure 6, Item 1) on BLACK exhaust line (Figure 6, Item 2).

END OF TASK

FOLLOW-ON MAINTENANCE

1. Install steering column (WP 0533).
2. Install brake pedal (WP 0501).
3. Install DCM mounting bracket assembly exterior armor (WP 0646).
4. Connect battery cables (WP 0404).
5. Close engine hood (TM 9-2355-106-10).
6. Turn MAIN POWER switch on (TM 9-2355-106-10).
7. Remove wheel chocks (TM 9-2355-106-10).
8. Test-drive vehicle to verify brake system operation (TM 9-2355-106-10).
9. Set transmission in NEUTRAL (N) (TM 9-2355-106-10).
10. Set vehicle parking brake (TM 9-2355-106-10).
11. Turn engine off (TM 9-2355-106-10).
12. Turn MAIN POWER switch off (TM 9-2355-106-10).

END OF TASK

END OF WORK PACKAGE

FIELD MAINTENANCE

DRIVER CONTROL MODULE (DCM) LEFT AIR LINE GROMMET REMOVAL AND INSTALLATION

INITIAL SETUP:

Tools and Special Tools
General Mechanic's Tool Kit (GMTK) (WP 0795, Item 37)

References
TM 9-2355-106-10
TM 9-2355-106-23P
WP 0782

Equipment Condition
Parking brake set (TM 9-2355-106-10)
Transmission set in NEUTRAL (N) (TM 9-2355-106-10)
Engine off (TM 9-2355-106-10)
MAIN POWER switch off (TM 9-2355-106-10)
Wheels chocked (TM 9-2355-106-10)
Engine hood open and secured (TM 9-2355-106-10)
Air pressure drained from all air brake reservoirs (TM 9-2355-106-10)
Battery cables disconnected (WP 0404)
Driver Control Module (DCM) mounting bracket assembly exterior armor removed (WP 0646) and (WP 0647)

WARNING

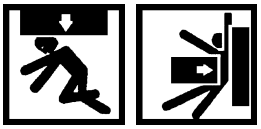

Engine hood is extremely heavy and requires two-person lift. Ensure that there is adequate space in front of the vehicle to open hood completely without pinning or pinching personnel between hood and any other structure. Use extreme care when working under hood and make sure it is properly supported. Failure to comply may result in serious injury or death to personnel.

DRIVER CONTROL MODULE (DCM) LEFT AIR LINE GROMMET REMOVAL AND INSTALLATION - (CONTINUED)

REMOVAL

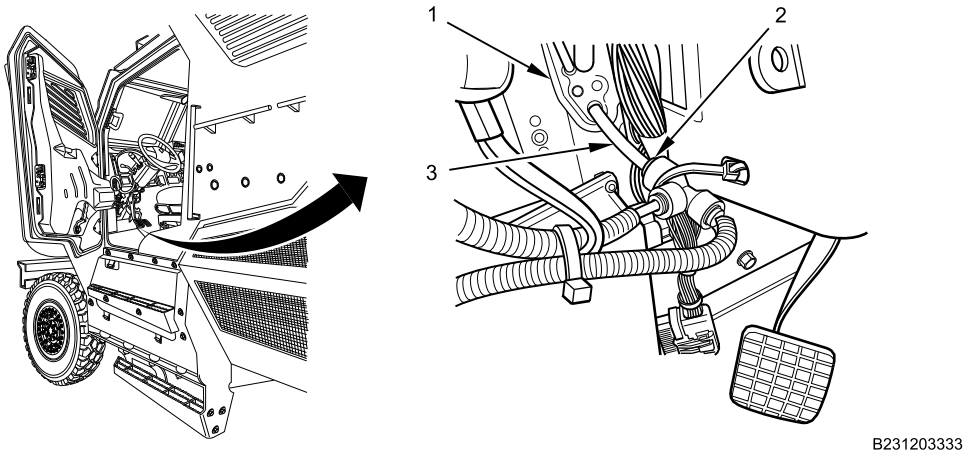

Figure 1. Door Actuator Air Line Supply.

1. Disconnect door actuator supply tee (Figure 1, Item 2) from BLUE door actuator supply air line (Figure 1, Item 3) at left air line grommet (Figure 1, Item 1) inside cabin.

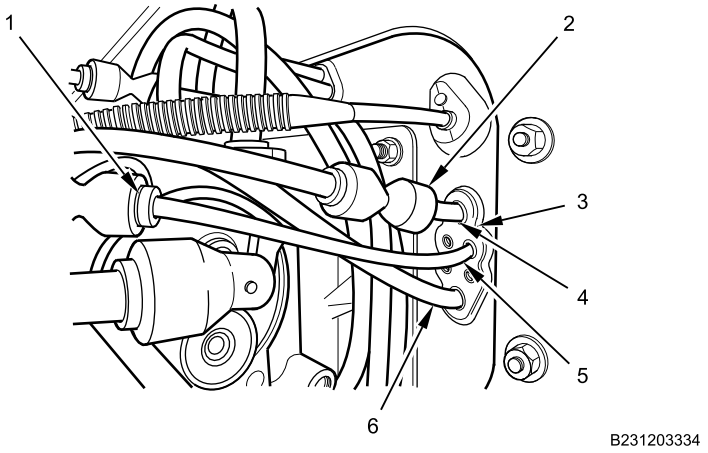

Figure 2. Exterior Air Lines.

2. Disconnect supply air line union (Figure 2, Item 2) from YELLOW supply air line (Figure 2, Item 4) at left air line grommet (Figure 2, Item 3) outside cabin.
3. Disconnect air line union (Figure 2, Item 1) from BLACK air cleaner restriction gauge vacuum line (Figure 2, Item 5) at left air line grommet (Figure 2, Item 3) outside cabin.
4. Remove BLUE door actuator supply air line (Figure 2, Item 6) from left air line grommet (Figure 2, Item 3) outside cabin.

DRIVER CONTROL MODULE (DCM) LEFT AIR LINE GROMMET REMOVAL AND INSTALLATION - (CONTINUED)

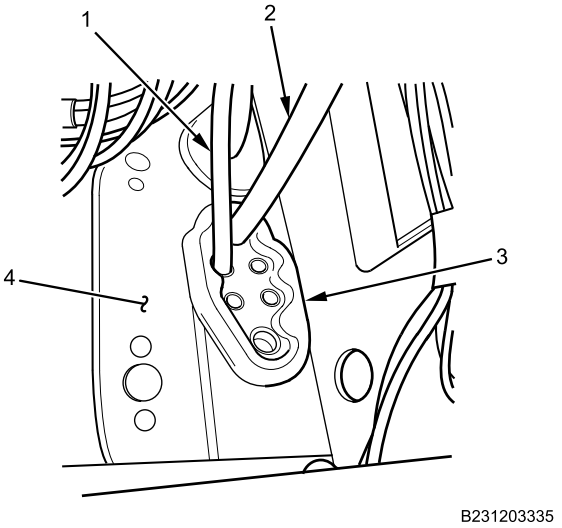

Figure 3. Interior Air Lines.

5. Remove YELLOW supply air line (Figure 3, Item 2) and BLACK air cleaner restriction gauge vacuum line (Figure 3, Item 1) from left air line grommet (Figure 3, Item 3) inside cabin.
6. Remove left air line grommet (Figure 3, Item 3) from DCM (Figure 3, Item 4) inside cabin.

END OF TASK

INSTALLATION

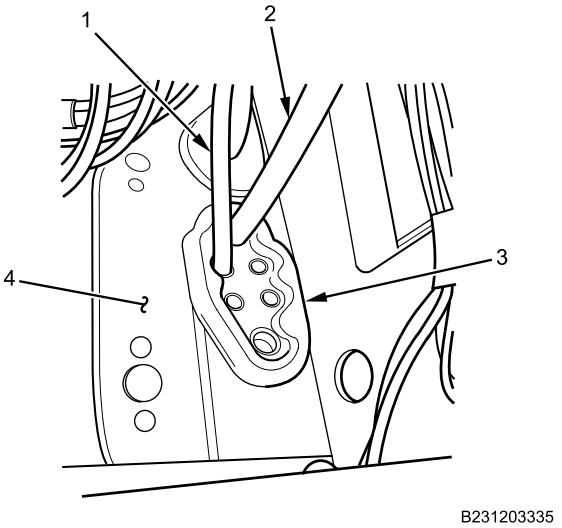

Figure 4. Interior Air Lines.

1. Install left air line grommet (Figure 4, Item 3) on DCM (Figure 4, Item 4) inside cabin.
2. Install YELLOW supply air line (Figure 4, Item 2) and BLACK air cleaner restriction gauge vacuum line (Figure 4, Item 1) on left air line grommet (Figure 4, Item 3) inside cabin.

DRIVER CONTROL MODULE (DCM) LEFT AIR LINE GROMMET REMOVAL AND INSTALLATION - (CONTINUED)

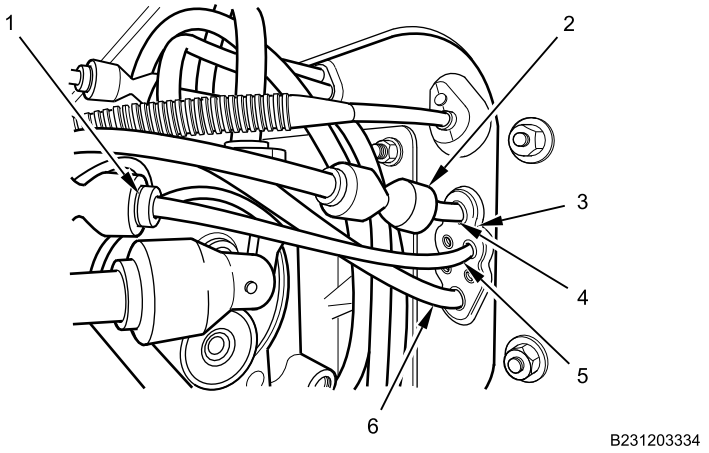

Figure 5. Exterior Air Lines.

3. Install BLUE door actuator supply air line (Figure 5, Item 6) on left air line grommet (Figure 5, Item 3) outside cabin.
4. Connect air line union (Figure 5, Item 1) on BLACK air cleaner restriction gauge vacuum line (Figure 5, Item 5)at left air line grommet (Figure 5, Item 3) outside cabin.
5. Connect supply air line union (Figure 5, Item 2) on YELLOW supply air line (Figure 5, Item 4) at left air line grommet (Figure 5, Item 3) outside cabin.

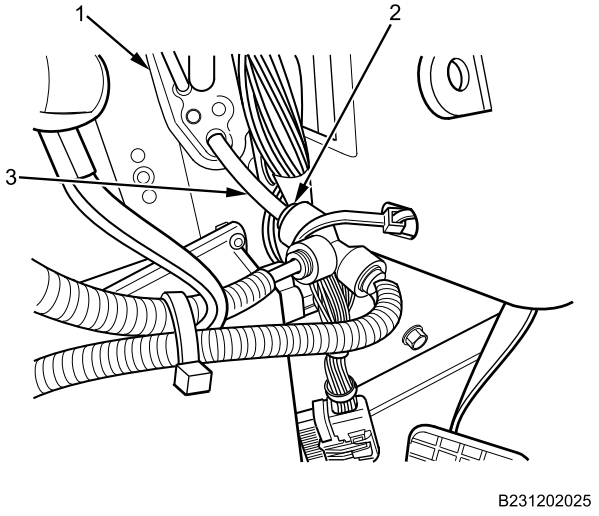

Figure 6. Door Actuator Air Line Supply.

6. Connect door actuator supply tee (Figure 6, Item 2) on BLUE door actuator supply air line (Figure 6, Item 3) at left air line grommet (Figure 6, Item 1) inside cabin.

END OF TASK

DRIVER CONTROL MODULE (DCM) LEFT AIR LINE GROMMET REMOVAL AND INSTALLATION - (CONTINUED)

FOLLOW-ON MAINTENANCE

1. Install DCM mounting bracket assembly exterior armor (WP 0646) and (WP 0647).
2. Close engine hood (TM 9-2355-106-10).
3. Connect battery cables (WP 0404).
4. Remove wheel chocks (TM 9-2355-106-10).
5. Turn MAIN POWER switch on (TM 9-2355-106-10).
6. Test-drive vehicle to verify brake system operation (TM 9-2355-106-10).
7. Set transmission in NEUTRAL (N) (TM 9-2355-106-10).
8. Set parking brake (TM 9-2355-106-10).
9. Turn engine off (TM 9-2355-106-10).
10. Turn MAIN POWER switch off (TM 9-2355-106-10).

END OF TASK

END OF WORK PACKAGE

FIELD MAINTENANCE

HAND BRAKE CONTROL VALVE REMOVAL AND INSTALLATION

INITIAL SETUP:

Tools and Special Tools
General Mechanic's Tool Kit (GMTK) (WP 0795, Item 37)

Materials/Parts
Wire tags (WP 0794, Item 33)
Goggles, industrial (WP 0794, Item 20)

References
TM 9-2355-106-10
TM 9-2355-106-23P
WP 0782

Equipment Condition
Parking brake set (TM 9-2355-106-10)
Transmission set in NEUTRAL (N) (TM 9-2355-106-10)
Engine off (TM 9-2355-106-10)
MAIN POWER switch off (TM 9-2355-106-10)
Wheels chocked (TM 9-2355-106-10)
Air pressure drained from all air brake reservoirs (TM 9-2355-106-10)
Battery cables disconnected (WP 0404)

REMOVAL

WARNING

Before working on air brake system or any auxiliary pressurized system, make sure air pressure has been drained from all reservoirs. Failure to comply may result in serious injury or death to personnel.

Air drain valves are under pressure. Wear protective goggles and do not place face in front of air drain valves while draining air reservoirs. Open air drain valves slowly to release air pressure gradually. Failure to comply may result in serious injury or death to personnel.

Do not disconnect any air line or fitting until system pressure has been relieved. Hoses may whip and injure personnel, and air under pressure can penetrate skin. Failure to comply may result in serious injury or death to personnel.

Do not operate vehicle with air pressure system loss. Vehicle has reduced or no braking capability and may not stop. Failure to comply may result in damage to equipment and serious injury or death to personnel.

Let air pressure build in both tanks to 100 psi (689 kPa) before releasing the parking brake. Low air pressure may affect vehicle braking capability. Failure to comply may result in injury or death to personnel.

HAND BRAKE CONTROL VALVE REMOVAL AND INSTALLATION - (CONTINUED)

1. Push in on storage bin retainers (Figure 1, Item 4) and pull storage bin (Figure 1, Item 3) from IP center trim panel (Figure 1, Item 2).

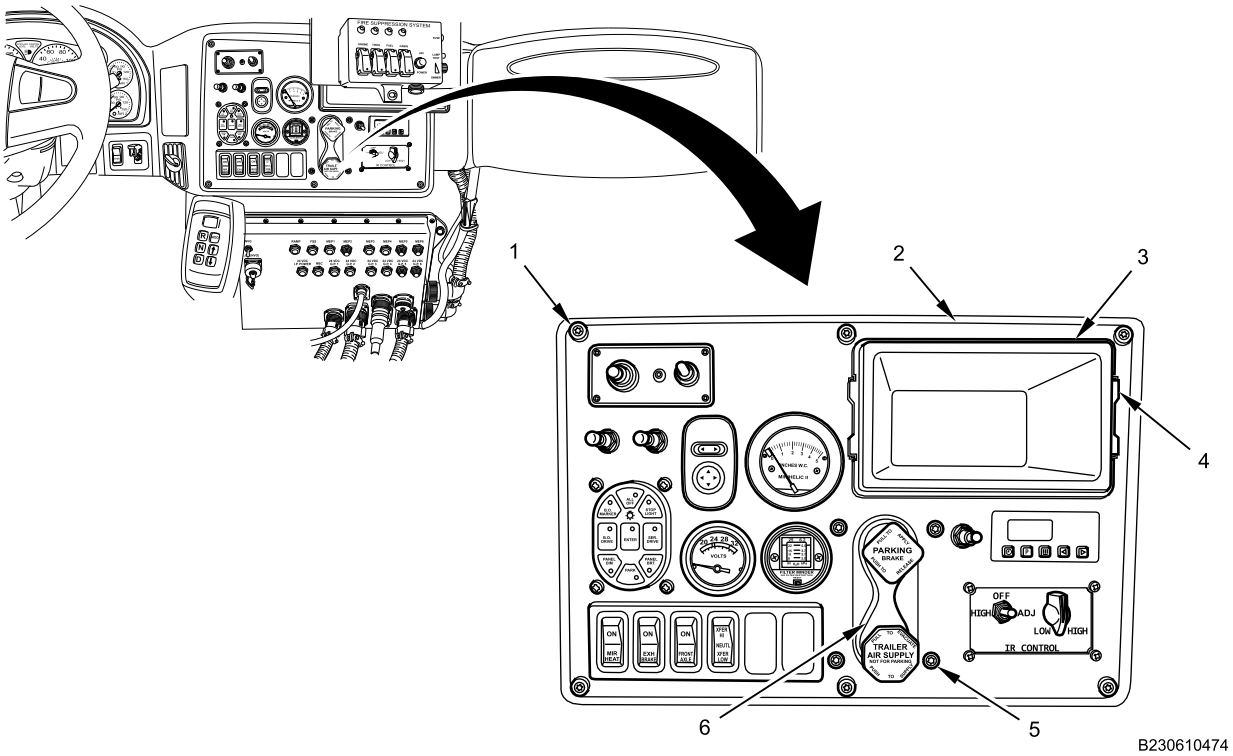

Figure 1. Instrument Panel (IP) Center Trim Panel.

2. Remove six screws (Figure 1, Item 1) securing IP center trim panel (Figure 1, Item 2) to IP.
3. Remove four screws (Figure 1, Item 5) from IP center trim panel (Figure 1, Item 2).
4. Pull IP center trim panel (Figure 1, Item 2) back to gain access behind hand brake control valve (Figure 1, Item 6).

NOTE

Tag and label air lines to aid in installation.

5. Remove air line (Figure 2, Item 2) from hand brake control valve (Figure 2, Item 1).

HAND BRAKE CONTROL VALVE REMOVAL AND INSTALLATION - (CONTINUED)

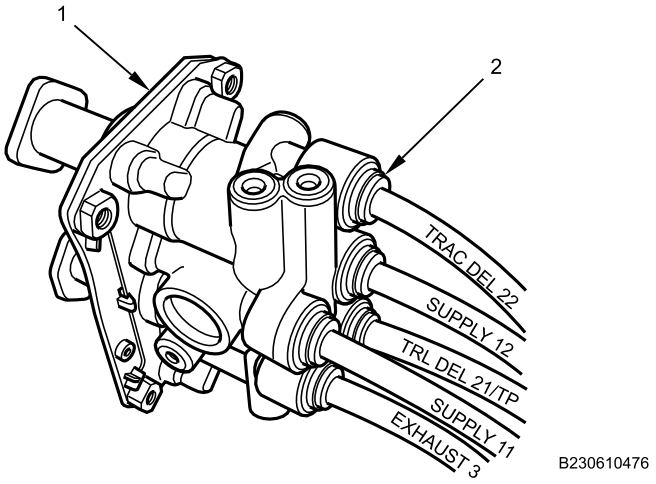

Figure 2. Hand Brake Control Valve.

6. Repeat for remaining air lines (Figure 2, Item 2).

END OF TASK

INSTALLATION

Table 1. Hand Brake Control Valve Tubing.

HAND BRAKE CONTROL VALVE PORT	TUBING IDENTIFIER	DESCRIPTION	TUBING COLOR
2	TRAC DEL 22	Tractor delivery	YELLOW
3	SUPPLY 12	Supply	ORANGE
4	TRL DEL 21/TP	Trailer delivery/transport	RED
5	EXHAUST 3	Exhaust	BLACK
6	SUPPLY 11	Supply	GREEN

HAND BRAKE CONTROL VALVE REMOVAL AND INSTALLATION - (CONTINUED)

1. Install air lines (Figure 3, Item 2) on hand brake control valve (Figure 3, Item 1). Refer to Table 1 for proper air line connections.

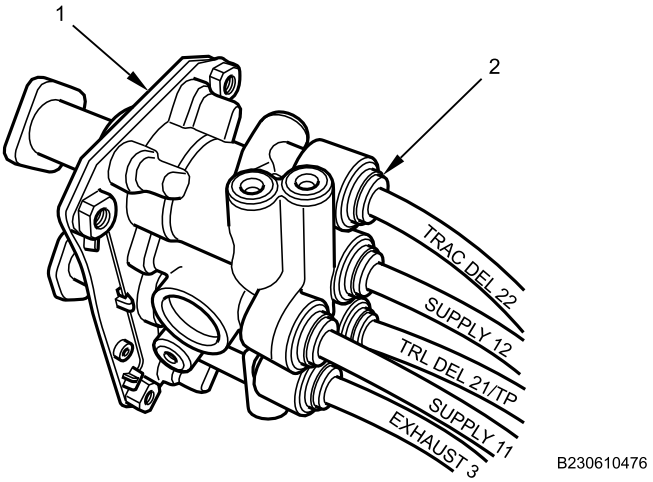

Figure 3. Hand Brake Control Valve.

2. Position hand brake control valve (Figure 4, Item 6) on IP center trim panel (Figure 4, Item 2) and install with four screws (Figure 4, Item 5).

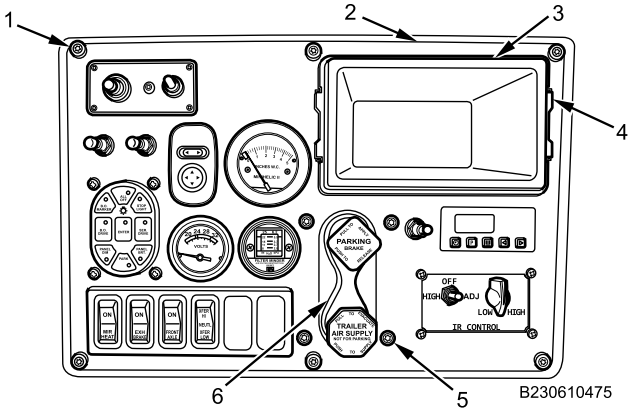

Figure 4. IP Center Trim Panel.

3. Align IP center trim panel (Figure 4, Item 2) to IP opening.
4. Install six screws (Figure 4, Item 1) securing IP center trim panel (Figure 4, Item 2) to IP.
5. Install storage bin (Figure 4, Item 3) in IP opening and push forward to engage retainers (Figure 4, Item 4).

END OF TASK

HAND BRAKE CONTROL VALVE REMOVAL AND INSTALLATION - (CONTINUED)

FOLLOW-ON MAINTENANCE

1. Connect battery cables (WP 0404).
2. Turn MAIN POWER switch on (TM 9-2355-106-10).
3. Remove wheel chocks (TM 9-2355-106-10).
4. Start engine and allow air pressure to build to normal operating range (TM 9-2355-106-10).
5. Test-drive vehicle to verify hand brake control valve and brake system operation (TM 9-2355-106-10).
6. Set transmission in NEUTRAL (N) (TM 9-2355-106-10).
7. Set vehicle parking brake (TM 9-2355-106-10).
8. Turn engine off (TM 9-2355-106-10).
9. Turn MAIN POWER switch off (TM 9-2355-106-10).

END OF TASK

END OF WORK PACKAGE

FIELD MAINTENANCE

FRONT ANTILOCK BRAKE SYSTEM (ABS) MODULATOR VALVE REMOVAL AND INSTALLATION

INITIAL SETUP:

Tools and Special Tools
General Mechanic's Tool Kit (GMTK) (WP 0795, Item 37)

Materials/Parts
Grease (WP 0794, Item 22)
Tape (WP 0794, Item 50)
Goggles, industrial (WP 0794, Item 20)
Faceshield, industrial (WP 0794, Item 16)
Cable lock strap - (4) (WP 0796, Item 124)

Personnel Required
Maintainer, (2)

References
TM 9-2355-106-10
TM 9-2355-106-23P
WP 0786
WP 0782

Equipment Condition
Parking brake set (TM 9-2355-106-10)
Transmission set in NEUTRAL (N) (TM 9-2355-106-10)
Engine off (TM 9-2355-106-10)
MAIN POWER switch off (TM 9-2355-106-10)
Wheels chocked (TM 9-2355-106-10)
Engine hood open and secured (TM 9-2355-106-10)
Air tanks drained (TM 9-2355-106-10)

REMOVAL

WARNING

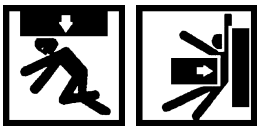

Do not operate vehicle with air pressure system loss. Vehicle has reduced or no braking capability and may not stop. Failure to comply may result in damage to equipment and serious injury or death to personnel.

Let air pressure build in both tanks to 100 psi (689 kPa) before releasing the parking brake. Low air pressure may affect vehicle braking capability. Failure to comply may result in injury or death to personnel.

Engine hood is extremely heavy and requires two-person lift. Ensure that there is adequate space in front of the vehicle to open hood completely without pinning or pinching personnel between hood and any other structure. Use extreme care when working under hood and make sure it is properly supported. Failure to comply may result in serious injury or death to personnel.

FRONT ANTILOCK BRAKE SYSTEM (ABS) MODULATOR VALVE REMOVAL AND INSTALLATION - (CONTINUED)

1. Remove and discard cable lock straps (Figure 1, Item 1) as necessary.

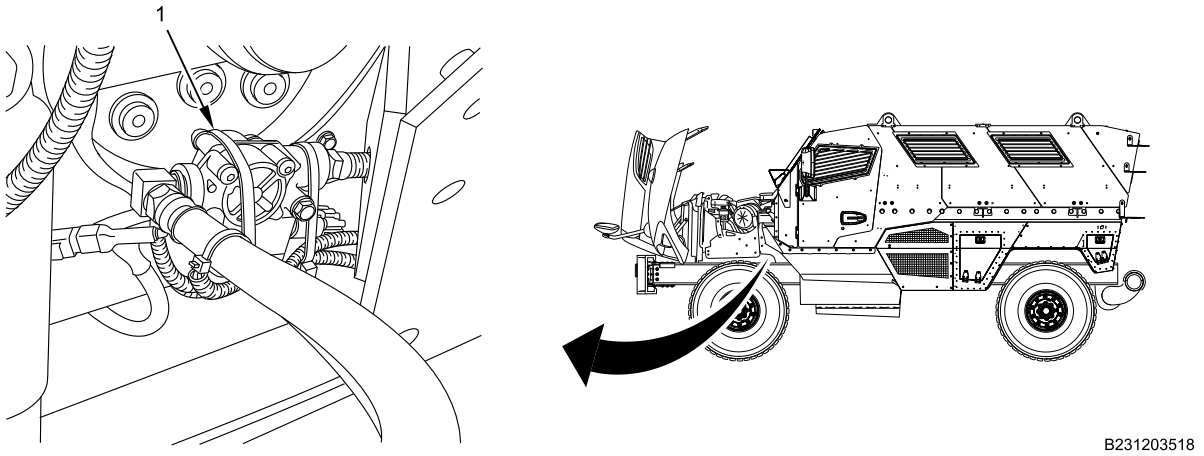

Figure 1. Cable Lock Strap.

2. Remove front air line (Figure 2, Item 4) from ABS modulator valve (Figure 2, Item 1).

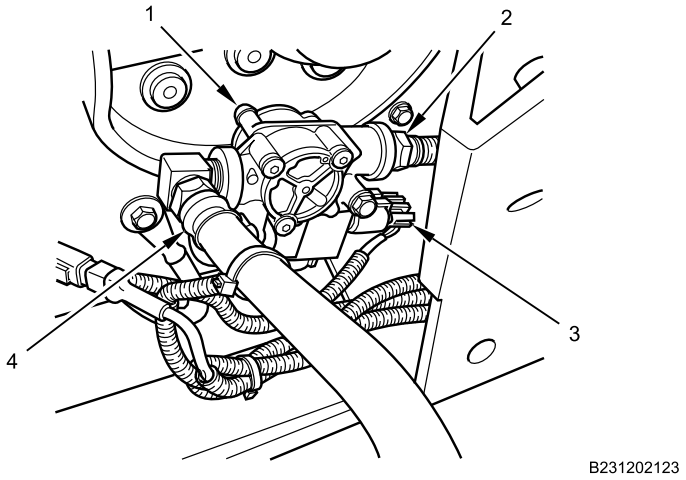

Figure 2. ABS Modulator Valve Air Line.

3. With assistance, remove two bolts (Figure 3, Item 2), nuts, and ABS modulator valve (Figure 3, Item 1) from frame rail (Figure 3, Item 3).

FRONT ANTILOCK BRAKE SYSTEM (ABS) MODULATOR VALVE REMOVAL AND INSTALLATION - (CONTINUED)

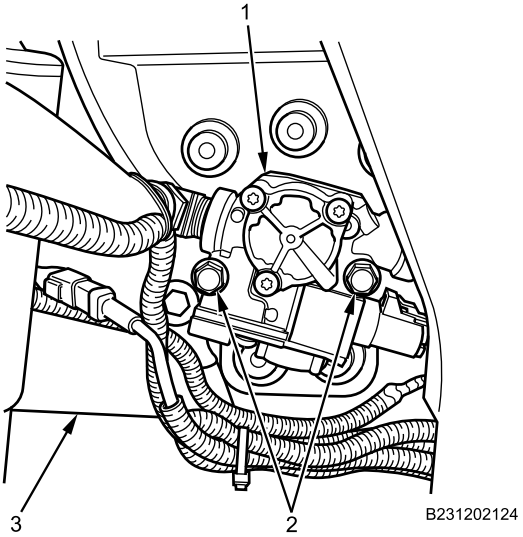

Figure 3. ABS Modulator Valve and Bolts.

4. Disconnect electrical connector (Figure 2, Item 3) from ABS modulator valve (Figure 2, Item 1).
5. Remove rear air line (Figure 2, Item 2) from ABS modulator valve (Figure 2, Item 1).

END OF TASK

DISASSEMBLY

1. Remove air line fittings (Figure 4, Item 2) from ABS modulator valve (Figure 4, Item 1).

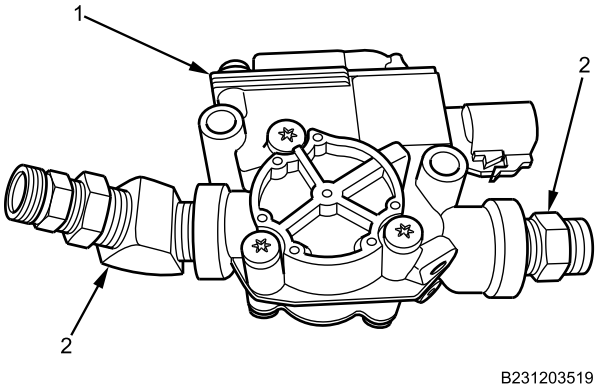

Figure 4. ABS Modulator Air Line Fittings.

2. Clean and remove all debris from fittings.

END OF TASK

FRONT ANTILOCK BRAKE SYSTEM (ABS) MODULATOR VALVE REMOVAL AND INSTALLATION - (CONTINUED)

ASSEMBLY

1. Apply thread sealing tape to threads on two fittings (Figure 5, Item 2).

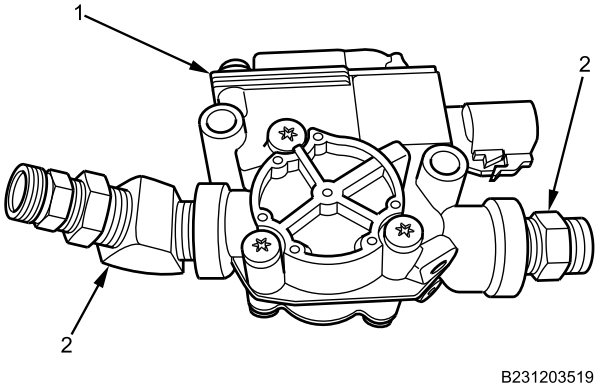

Figure 5. ABS Modulator Air Line Fittings.

2. Install air line fittings (Figure 5, Item 2) on ABS modulator valve (Figure 5, Item 1). Tighten fittings securely.

END OF TASK

INSTALLATION

WARNING

Dielectric grease is harmful to skin and eyes. If grease contacts eyes, rinse thoroughly and contact physician if irritation persists. If skin is contacted, wash thoroughly with soap and water. Failure to comply may result in serious injury to personnel.

1. Install rear air line (Figure 6, Item 2) onto ABS modulator valve (Figure 6, Item 1). Tighten air line securely.

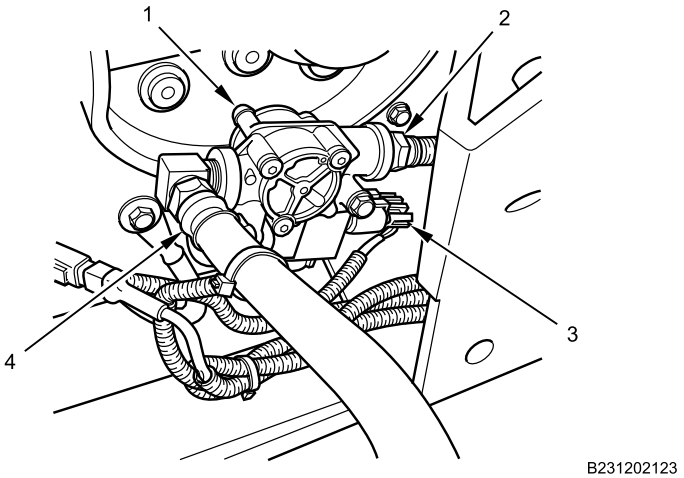

Figure 6. ABS Modulator Valve Air Line.

FRONT ANTILOCK BRAKE SYSTEM (ABS) MODULATOR VALVE REMOVAL AND INSTALLATION - (CONTINUED)

2. Apply dielectric grease in electrical connector (Figure 6, Item 3) and connect onto ABS modulator valve (Figure 6, Item 1).
3. With assistance, install ABS modulator valve (Figure 7, Item 1) on frame rail (Figure 7, Item 3) with two bolts (Figure 7, Item 2) and nuts. Tighten nuts securely.

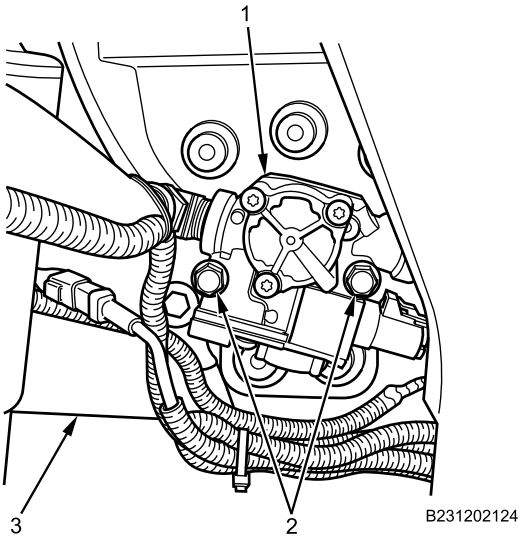

Figure 7. ABS Modulator Valve and Bolts.

4. Install front air line (Figure 6, Item 4) onto ABS modulator valve (Figure 6, Item 1). Tighten air line securely.
5. Install new cable lock straps as necessary.

END OF TASK

FOLLOW-ON MAINTENANCE

1. Turn MAIN POWER switch on (TM 9-2355-106-10).
2. Start engine and allow air brake system pressure to build to normal range (TM 9-2355-106-10).
3. Check for leaks (TM 9-2355-106-10).
4. Turn engine off (TM 9-2355-106-10).
5. Turn MAIN POWER switch off (TM 9-2355-106-10).
6. Close engine hood (TM 9-2355-106-10).
7. Remove wheel chocks (TM 9-2355-106-10).

END OF TASK

END OF WORK PACKAGE

FIELD MAINTENANCE

FRONT BRAKE AIR HOSES REMOVAL AND INSTALLATION

INITIAL SETUP:

Tools and Special Tools
General Mechanic's Tool Kit (GMTK) (WP 0795, Item 37)

Materials/Parts
Cable lock strap (WP 0796, Item 120)

References
TM 9-2355-106-10
TM 9-2355-106-23P
WP 0782

Equipment Condition
Parking brake set (TM 9-2355-106-10)
Transmission set in NEUTRAL (N) (TM 9-2355-106-10)
Engine off (TM 9-2355-106-10)
MAIN POWER switch off (TM 9-2355-106-10)
Wheels chocked (TM 9-2355-106-10)
Air tanks drained (TM 9-2355-106-10)

WARNING

Before working on air brake system or any auxiliary pressurized system, make sure air pressure has been drained from all reservoirs. Failure to comply may result in serious injury or death to personnel.

Air drain valves are under pressure. Wear protective goggles and do not place face in front of air drain valves while draining air reservoirs. Open air drain valves slowly to release air pressure gradually. Failure to comply may result in serious injury or death to personnel.

Do not disconnect any air line or fitting until system pressure has been relieved. Hoses may whip and injure personnel, and air under pressure can penetrate skin. Failure to comply may result in serious injury or death to personnel.

Do not operate vehicle with air pressure system loss. Vehicle has reduced or no braking capability and may not stop. Failure to comply may result in damage to equipment and serious injury or death to personnel.

Let air pressure build in both tanks to 100 psi (689 kPa) before releasing the parking brake. Low air pressure may affect vehicle braking capability. Failure to comply may result in injury or death to personnel.

NOTE

This procedure is the same for right and left front brake hoses. Left side shown.

Note the location and quantity of cable lock straps for installation.

FRONT BRAKE AIR HOSES REMOVAL AND INSTALLATION - (CONTINUED)

REMOVAL

1. Remove and discard all cable lock straps (Figure 1, Item 1) securing front brake hose.

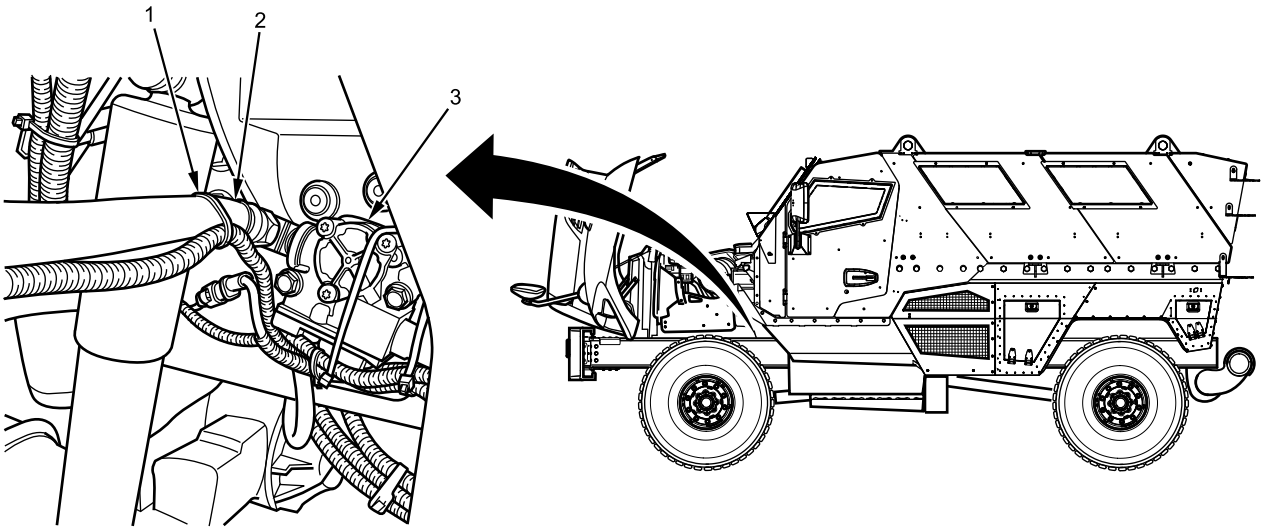

B231212138

Figure 1. Modulator Valve.

2. Remove service brake hose (Figure 1, Item 2) from modulator valve (Figure 1, Item 3) on frame rail.

FRONT BRAKE AIR HOSES REMOVAL AND INSTALLATION - (CONTINUED)

3. Remove service brake hose (Figure 2, Item 2) from brake chamber (Figure 2, Item 1).

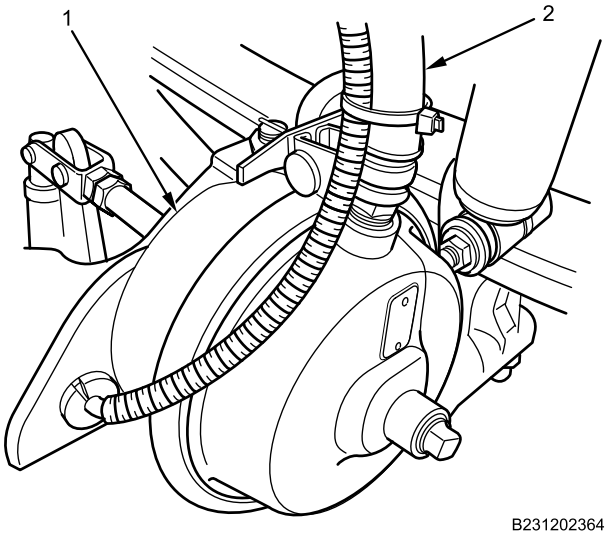

Figure 2. Front Brake Chamber.

END OF TASK

INSTALLATION

1. Install service brake hose (Figure 3, Item 2) on brake chamber (Figure 3, Item 1).

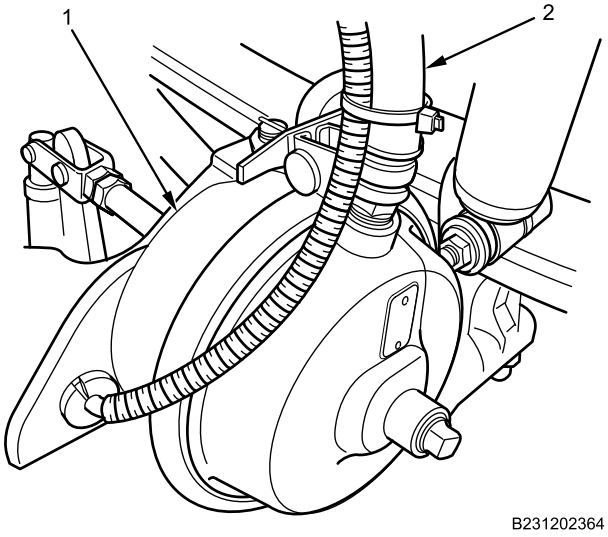

Figure 3. Front Brake Chamber.

FRONT BRAKE AIR HOSES REMOVAL AND INSTALLATION - (CONTINUED)

2. Install service brake hose (Figure 4, Item 2) on modulator valve (Figure 4, Item 3) on frame rail.

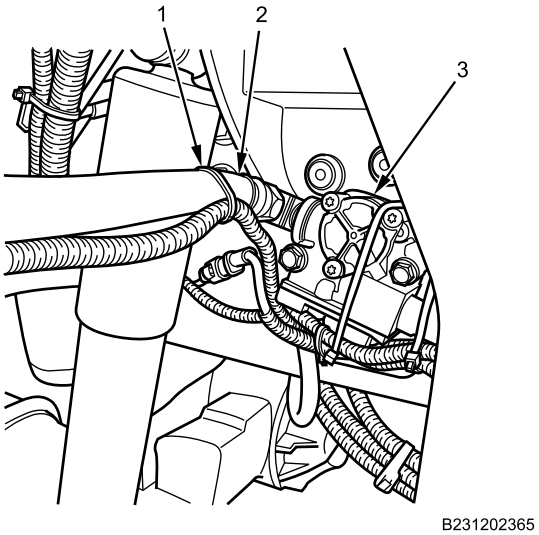

Figure 4. Modulator Valve.

3. Secure service brake hose with new cable lock straps (Figure 4, Item 1).

END OF TASK

FOLLOW-ON MAINTENANCE

1. Close all air drain valves (TM 9-2355-106-10).
2. Start engine (TM 9-2355-106-10).
3. Refill air tanks (TM 9-2355-106-10).
4. Check for air system leaks (TM 9-2355-106-10).
5. Verify air system regains full air pressure (TM 9-2355-106-10).
6. Turn off engine (TM 9-2355-106-10).
7. Turn MAIN POWER switch off (TM 9-2355-106-10).
8. Remove wheel chocks (TM 9-2355-106-10).

END OF TASK

END OF WORK PACKAGE

FIELD MAINTENANCE

SPRING BRAKE MODULATING VALVE REMOVAL AND INSTALLATION

INITIAL SETUP:

Tools and Special Tools
General Mechanic's Tool Kit (GMTK) (WP 0795, Item 37)

Materials/Parts
Compound (WP 0794, Item 13)
Cable lock strap (WP 0796, Item 124)

References
TM 9-2355-106-10
TM 9-2355-106-23P
WP 0782

Equipment Condition
Parking brake set (TM 9-2355-106-10)
Transmission set in NEUTRAL (N) (TM 9-2355-106-10)
Engine off (TM 9-2355-106-10)
MAIN POWER switch off (TM 9-2355-106-10)
Wheels chocked (TM 9-2355-106-10)
Air pressure drained from all air brake reservoirs (TM 9-2355-106-10)
Belly armor removed (WP 0606)
Air dryer removed (WP 0517)

REMOVAL

WARNING

Before working on air brake system or any auxiliary pressurized system, make sure air pressure has been drained from all reservoirs. Failure to comply may result in serious injury or death to personnel.

Air drain valves are under pressure. Wear protective goggles and do not place face in front of air drain valves while draining air reservoirs. Open air drain valves slowly to release air pressure gradually. Failure to comply may result in serious injury or death to personnel.

Do not disconnect any air line or fitting until system pressure has been relieved. Hoses may whip and injure personnel, and air under pressure can penetrate skin. Failure to comply may result in serious injury or death to personnel.

Do not operate vehicle with air pressure system loss. Vehicle has reduced or no braking capability and may not stop. Failure to comply may result in damage to equipment and serious injury or death to personnel.

Let air pressure build in both tanks to 100 psi (689 kPa) before releasing the parking brake. Low air pressure may affect vehicle braking capability. Failure to comply may result in injury or death to personnel.

SPRING BRAKE MODULATING VALVE REMOVAL AND INSTALLATION - (CONTINUED)

NOTE

Remove and discard cable lock straps as necessary.

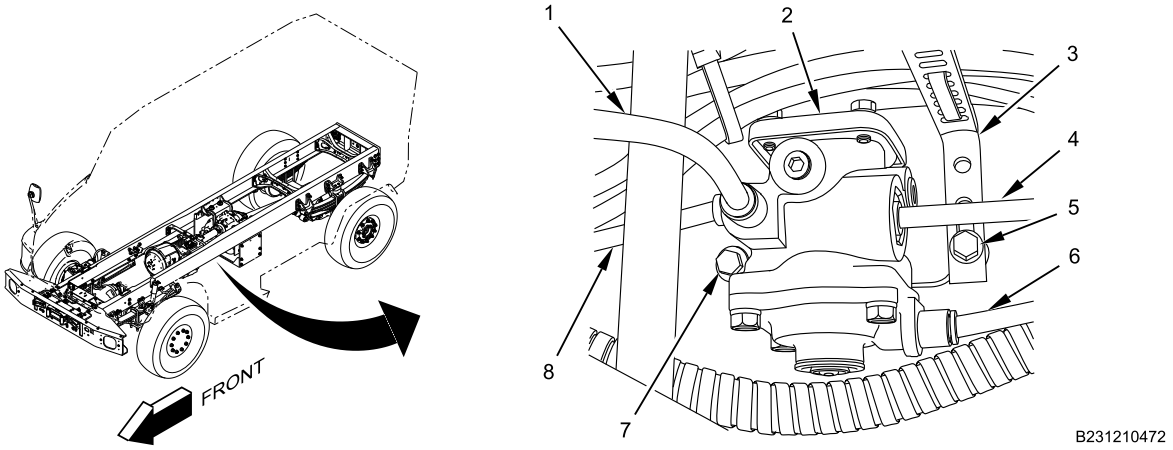

Figure 1. Spring Brake Modulating Valve.

1. Disconnect GREEN air line (Figure 1, Item 1) from spring brake modulating valve (Figure 1, Item 2).
2. Disconnect YELLOW with BLACK bands air line (Figure 1, Item 4) from spring brake modulating valve (Figure 1, Item 2).
3. Disconnect ORANGE air line (Figure 1, Item 6) from spring brake modulating valve (Figure 1, Item 2).
4. Disconnect YELLOW air line (Figure 1, Item 8) from spring brake modulating valve (Figure 1, Item 2).
5. Remove spring brake modulating valve mounting bolts (Figure 1, Item 5 and 7) from spring brake modulating valve (Figure 1, Item 2) and harness bracket (Figure 1, Item 3) and remove valve.

END OF TASK

INSTALLATION

WARNING

Corrosion preventive compound is toxic. Use only in well-ventilated area. Do not get in eyes; wear chemical safety goggles and full-face shield when using. Avoid contact with skin and wear rubber or plastic, solvent-resistant gloves. In case of contact, remove contaminated clothing and immediately wash area with soap and water. If compound contacts eyes, flush eyes with large amounts of water for at least 15 minutes and get immediate medical attention. If swallowed, do not induce vomiting; contact a physician immediately. Failure to comply may result in serious injury or death to personnel.

SPRING BRAKE MODULATING VALVE REMOVAL AND INSTALLATION - (CONTINUED)

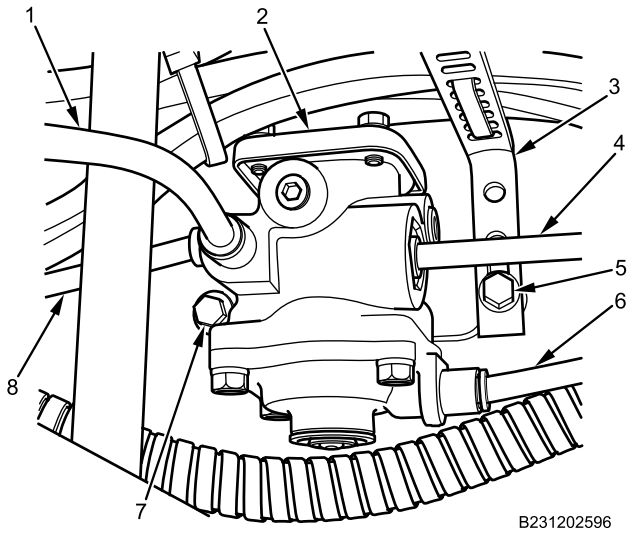

Figure 2. Spring Brake Modulating Valve.

1. Apply corrosion preventive compound to mounting bolts (Figure 2, Item 5 and 7).
2. Position valve (Figure 2, Item 2) and bracket (Figure 2, Item 3). Install mounting bolts (Figure 2, Item 5 and 7) and tighten securely.
3. Connect YELLOW air line (Figure 2, Item 8) on spring brake modulating valve (Figure 2, Item 2).
4. Connect ORANGE air line (Figure 2, Item 6) on spring brake modulating valve (Figure 2, Item 2).
5. Connect YELLOW with BLACK bands air line (Figure 2, Item 4) on spring brake modulating valve (Figure 2, Item 2).
6. Connect GREEN air line (Figure 2, Item 1) on spring brake modulating valve (Figure 2, Item 2).
7. Replace cable lock straps as needed.

END OF TASK

FOLLOW-ON MAINTENANCE

1. Install air dryer (WP 0517).
2. Turn MAIN POWER switch on (TM 9-2355-106-10).
3. Remove wheel chocks (TM 9-2355-106-10).
4. Start engine and let air pressure build to normal range (TM 9-2355-106-10).
5. Test-drive vehicle to verify brake operation (TM 9-2355-106-10).
6. Set vehicle parking brake (TM 9-2355-106-10).
7. Set transmission in NEUTRAL (N) (TM 9-2355-106-10).
8. Turn engine off (TM 9-2355-106-10).
9. Turn MAIN POWER switch off (TM 9-2355-106-10).
10. Chock wheels (TM 9-2355-106-10).
11. Install belly armor (WP 0606).
12. Remove wheel chocks (TM 9-2355-106-10).

END OF TASK

END OF WORK PACKAGE

FIELD MAINTENANCE

AIR BRAKE RELAY VALVE REMOVAL AND INSTALLATION

INITIAL SETUP:

Tools and Special Tools
General Mechanic's Tool Kit (GMTK) (WP 0795, Item 37)

Materials/Parts
Wire tags (WP 0794, Item 49)

References
TM 9-2355-106-10
TM 9-2355-106-23P
WP 0782

Equipment Condition
Parking brake set (TM 9-2355-106-10)
Transmission set in NEUTRAL (N) (TM 9-2355-106-10)
Engine off (TM 9-2355-106-10)
MAIN POWER off (TM 9-2355-106-10)
Wheels chocked (TM 9-2355-106-10)
Air pressure drained from all air brake reservoirs (TM 9-2355-106-10)

REMOVAL

WARNING

Before working on air brake system or any auxiliary pressurized system, make sure air pressure has been drained from all reservoirs. Failure to comply may result in serious injury or death to personnel.

Do not disconnect any air line or fitting until system pressure has been relieved. Hoses may whip and injure personnel, and air under pressure can penetrate skin. Failure to comply may result in serious injury or death to personnel.

AIR BRAKE RELAY VALVE REMOVAL AND INSTALLATION - (CONTINUED)

NOTE

Note position and routing of each air line before removal to aid in proper installation.

Air brake relay valve is located in front of frame crossmember near rear axle assembly.

1. Disengage six quick connect fittings (Figure 1, Item 1) and remove six air lines (Figure 1, Item 3) from air brake relay valve (Figure 1, Item 2).

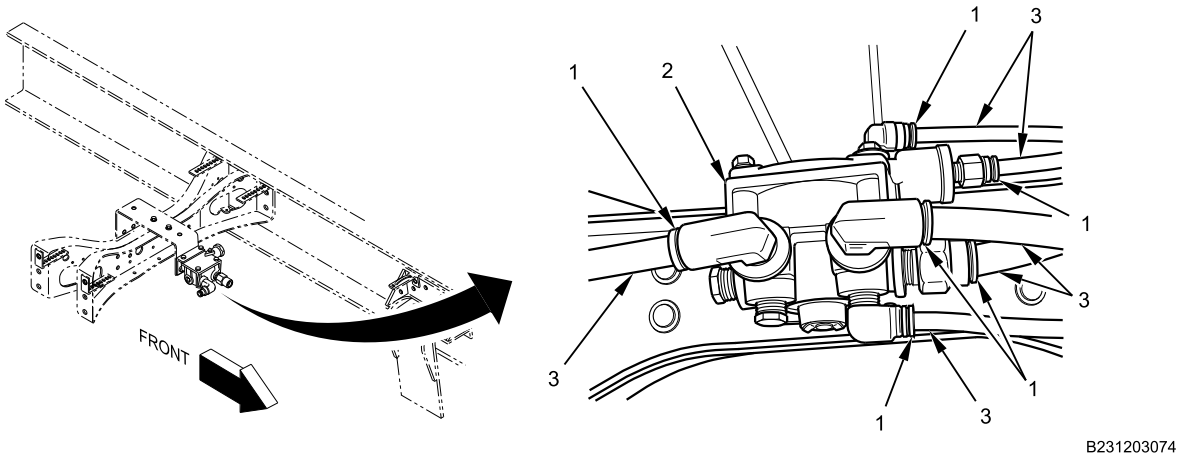

Figure 1. Air Brake Relay Valve Connections.

2. Remove two nuts (Figure 2, Item 3) and bolts from air brake valve mounting bracket (Figure 2, Item 2).

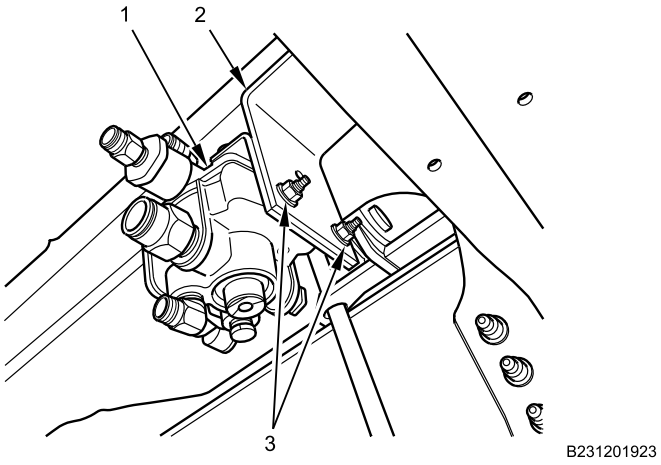

Figure 2. Air Brake Relay Valve Mounting.

3. Remove air brake relay valve (Figure 2, Item 1) from air brake valve mounting bracket (Figure 2, Item 2).

END OF TASK

AIR BRAKE RELAY VALVE REMOVAL AND INSTALLATION - (CONTINUED)

INSTALLATION

1. Install air brake relay valve (Figure 3, Item 1) on air brake valve mounting bracket (Figure 3, Item 2) with two bolts and nuts (Figure 3, Item 3) and tighten securely.

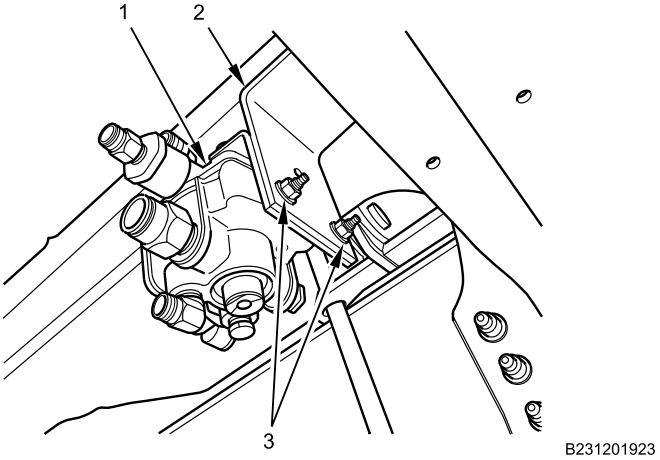

Figure 3. Air Brake Relay Valve Mounting.

WARNING

Ensure air lines and air line fittings are clean and are not damaged. Loose or leaking connections could degrade braking system performance or cause brakes to fail completely. Failure to comply may result in damage to equipment and serious injury or death to personnel.

Ensure air lines are installed in correct quick connect fittings as noted during removal. Incorrect air line connections could degrade braking system performance or cause brakes to fail completely. Failure to comply may result in damage to equipment and serious injury or death to personnel.

Ensure air lines are fully inserted and cannot be pulled free from quick connect fittings. Loose or leaking connections could degrade braking system performance or cause brakes to fail completely. Failure to comply may result in damage to equipment and serious injury or death to personnel.

AIR BRAKE RELAY VALVE REMOVAL AND INSTALLATION - (CONTINUED)

2. Install six air lines (Figure 4, Item 3) in quick connect fittings (Figure 4, Item 1) on air brake relay valve (Figure 4, Item 2).

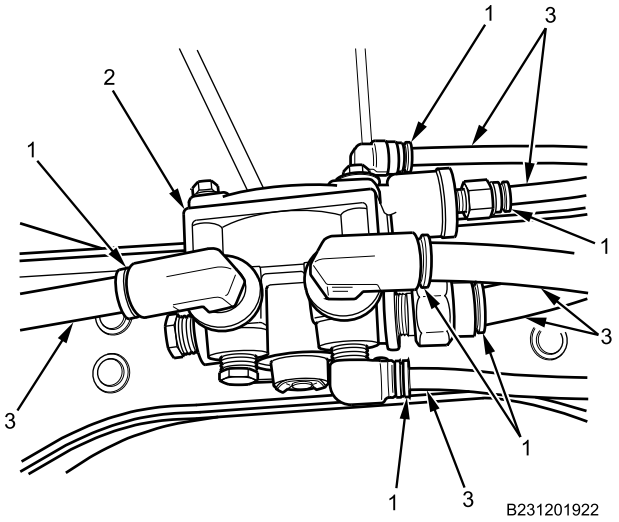

Figure 4. Air Brake Relay Valve Connections.

END OF TASK

FOLLOW-ON MAINTENANCE

1. Turn MAIN POWER switch on (TM 9-2355-106-10).
2. Start engine and allow air brake system pressure to build to normal range (TM 9-2355-106-10).
3. Check for air leaks (TM 9-2355-106-10).
4. Turn engine off (TM 9-2355-106-10).
5. Turn MAIN POWER switch off (TM 9-2355-106-10).
6. Remove wheel chocks (TM 9-2355-106-10).

END OF TASK

END OF WORK PACKAGE

FIELD MAINTENANCE

REAR ANTILOCK BRAKE SYSTEM (ABS) MODULATOR VALVE REMOVAL AND INSTALLATION

INITIAL SETUP:

Tools and Special Tools
General Mechanic's Tool Kit (GMTK) (WP 0795, Item 37)

Materials/Parts
Goggles, industrial (WP 0794, Item 20)
Gloves (WP 0794, Item 18)
Grease (WP 0794, Item 22)
Sealing compound (WP 0794, Item 44)
Cable lock strap - (3) (WP 0796, Item 124)

References
TM 9-2355-106-10
TM 9-2355-106-23P
WP 0782

Equipment Condition
Parking brake set (TM 9-2355-106-10)
Transmission set in NEUTRAL (N) (TM 9-2355-106-10)
Engine off (TM 9-2355-106-10)
MAIN POWER switch off (TM 9-2355-106-10)
Air tanks drained (TM 9-2355-106-10)

REMOVAL

WARNING

Before working on air brake system or any auxiliary pressurized system, make sure air pressure has been drained from all reservoirs. Failure to comply may result in serious injury or death to personnel.

Do not disconnect any air line or fitting until system pressure has been relieved. Hoses may whip and injure personnel, and air under pressure can penetrate skin. Failure to comply may result in serious injury or death to personnel.

NOTE

The ABS modulator valve is located in front of rear tire on the inside of frame rail.

Right side shown; left side similar.

REAR ANTILOCK BRAKE SYSTEM (ABS) MODULATOR VALVE REMOVAL AND INSTALLATION - (CONTINUED)

1. Remove and discard cable lock straps (Figure 1, Item 1) as necessary.

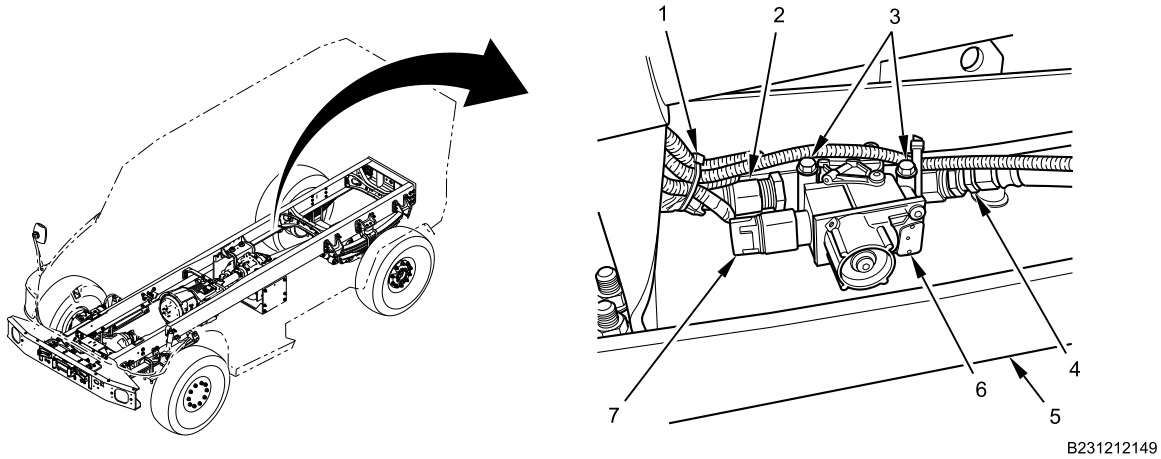

Figure 1. ABS Modulator Valve.

2. Remove rear air line (Figure 1, Item 4) from ABS modulator valve (Figure 1, Item 6).
3. Remove front air line (Figure 1, Item 2) from ABS modulator valve (Figure 1, Item 6).
4. Remove two bolts (Figure 1, Item 3) and ABS modulator valve (Figure 1, Item 6) from frame rail (Figure 1, Item 5).
5. Disconnect electrical connector (Figure 1, Item 7) from ABS modulator valve (Figure 1, Item 6).

END OF TASK

INSTALLATION

WARNING

Thread sealing compound is harmful to skin and eyes. If thread sealing compound contacts eyes, rinse thoroughly and contact physician if irritation persists. If skin is contacted, wash thoroughly with soap and water. Failure to comply may result in serious injury to personnel.

Dielectric grease is harmful to skin and eyes. If grease contacts eyes, rinse thoroughly and contact physician if irritation persists. If skin is contacted, wash thoroughly with soap and water. Failure to comply may result in serious injury to personnel.

1. Apply dielectric grease in electrical connector (Figure 2, Item 7) and connect onto ABS modulator valve (Figure 2, Item 6).

REAR ANTILOCK BRAKE SYSTEM (ABS) MODULATOR VALVE REMOVAL AND INSTALLATION - (CONTINUED)

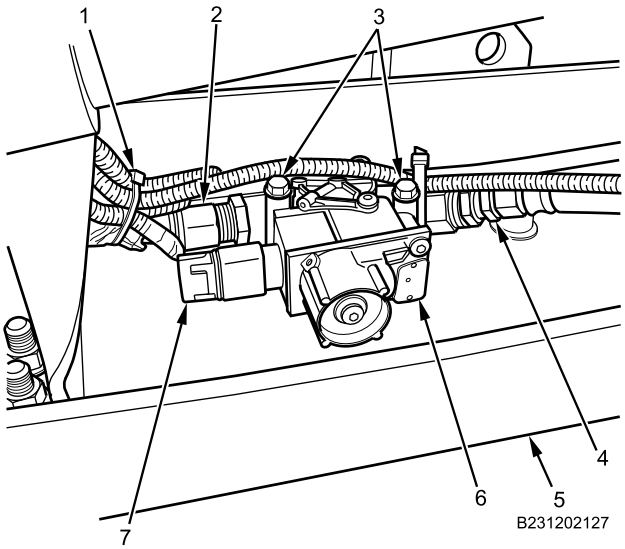

Figure 2. ABS Modulator Valve.

2. Install ABS modulator valve (Figure 2, Item 6) on frame rail (Figure 2, Item 5) with two bolts (Figure 2, Item 3). Tighten and secure.

NOTE

Do not allow thread sealing compound into ABS modulator valve.

3. Apply thread sealing compound on front and rear air line threads.
4. Install front air line (Figure 2, Item 2) onto ABS modulator valve (Figure 2, Item 6). Tighten and secure.
5. Install rear air line (Figure 2, Item 4) onto ABS modulator valve (Figure 2, Item 6). Tighten and secure.
6. Install new cable lock straps (Figure 2, Item 1) as necessary.

END OF TASK

FOLLOW-ON MAINTENANCE

1. Turn MAIN POWER switch on (TM 9-2355-106-10).
2. Start engine and allow air brake system pressure to build to normal range (TM 9-2355-106-10).
3. Check for air leaks (TM 9-2355-106-10).
4. Shut engine off (TM 9-2355-106-10).
5. Turn MAIN POWER switch off (TM 9-2355-106-10).
6. Remove wheel chocks (TM 9-2355-106-10).

END OF TASK

END OF WORK PACKAGE

FIELD MAINTENANCE

AIR HOSE QUICK CONNECT FITTING REMOVAL AND INSTALLATION

INITIAL SETUP:

Tools and Special Tools
General Mechanic's Tool Kit (GMTK) (WP 0795, Item 37)

Materials/Parts
Goggles, industrial (WP 0794, Item 20)
Sealing compound (WP 0794, Item 44)
Gloves (WP 0794, Item 18)

References
TM 9-2355-106-10
TM 9-2355-106-23P
WP 0782

Equipment Condition
Parking brake set (TM 9-2355-106-10)
Transmission set in NEUTRAL (N) (TM 9-2355-106-10)
Engine off (TM 9-2355-106-10)
MAIN POWER switch off (TM 9-2355-106-10)
Wheels chocked (TM 9-2355-106-10)
Air tanks drained (TM 9-2355-106-10)

WARNING

Air drain valves are under pressure. Wear protective goggles and do not place face in front of air drain valves while draining air reservoirs. Open air drain valves slowly to release air pressure gradually. Failure to comply may result in serious injury or death to personnel.

Do not disconnect any air line or fitting until system pressure has been relieved. Hoses may whip and injure personnel, and air under pressure can penetrate skin. Failure to comply may result in serious injury or death to personnel.

Do not operate vehicle with air pressure system loss. Vehicle has reduced or no braking capability and may not stop. Failure to comply may result in damage to equipment and serious injury or death to personnel.

Let air pressure build in both tanks to 100 psi (689 kPa) before releasing the parking brake. Low air pressure may affect vehicle braking capability. Failure to comply may result in injury or death to personnel.

AIR HOSE QUICK CONNECT FITTING REMOVAL AND INSTALLATION - (CONTINUED)

REMOVAL

NOTE

Air hose quick connect is located in right side forward stowage box.

1. Hold fitting (Figure 1, Item 2) attached to elbow (Figure 1, Item 1) and remove quick connect fitting (Figure 1, Item 3).

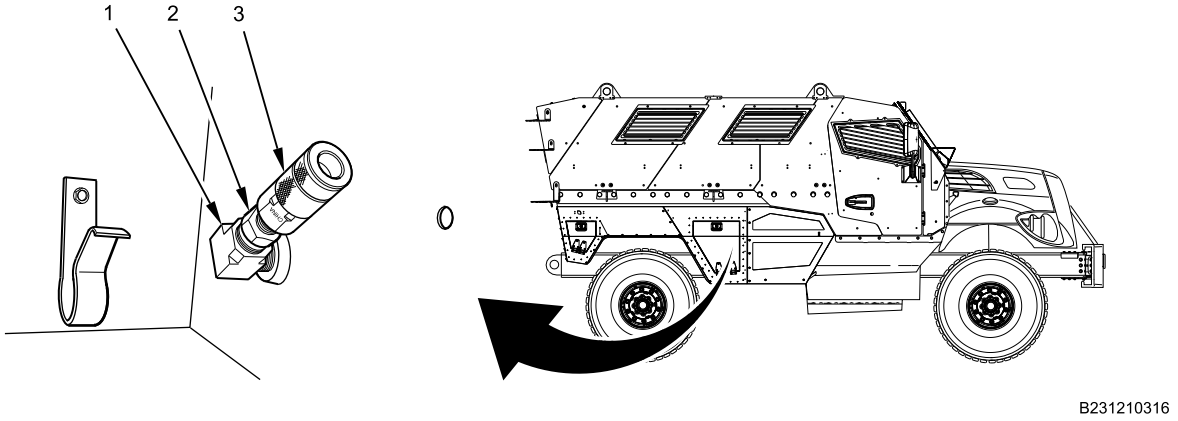

Figure 1. Air Hose Quick Connect Fitting Replacement.

END OF TASK

INSTALLATION

WARNING

Thread sealing compound is harmful to skin and eyes. If thread sealing compound contacts eyes, rinse thoroughly and contact physician if irritation persists. If skin is contacted, wash thoroughly with soap and water. Failure to comply may result in serious injury to personnel.

NOTE

Apply thread sealing compound to threaded areas of fittings before installation.

1. Hold fitting (Figure 2, Item 2) and install quick connect fitting (Figure 2, Item 3) and tighten securely. Ensure elbow (Figure 2, Item 1) does not move.

AIR HOSE QUICK CONNECT FITTING REMOVAL AND INSTALLATION - (CONTINUED)

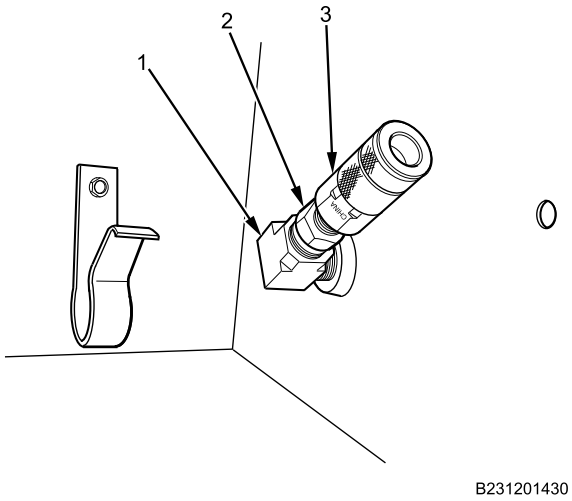

Figure 2. Air Fitting Installation.

END OF TASK

FOLLOW-ON MAINTENANCE

1. Turn MAIN POWER switch on (TM 9-2355-106-10).
2. Start engine to build air pressure (TM 9-2355-106-10).
3. Check for leaks.
4. Turn engine off (TM 9-2355-106-10).
5. Turn MAIN POWER switch off (TM 9-2355-106-10).
6. Remove wheel chocks (TM 9-2355-106-10).

END OF TASK

END OF WORK PACKAGE

FIELD MAINTENANCE

AIR HOSE FITTING REMOVAL AND INSTALLATION

INITIAL SETUP:

Tools and Special Tools
General Mechanic's Tool Kit (GMTK) (WP 0795, Item 37)
Quality Connect Tool Kit (WP 0795, Item 82)

Materials/Parts
Sealing compound (WP 0794, Item 44)
Cable lock strap (WP 0796, Item 124)

References
TM 9-2355-106-10
TM 9-2355-106-23P
WP 0782

Equipment Condition
Parking brake set (TM 9-2355-106-10)
Transmission set in NEUTRAL (N) (TM 9-2355-106-10)
Engine off (TM 9-2355-106-10)
MAIN POWER switch off (TM 9-2355-106-10)
Wheels chocked (TM 9-2355-106-10)
Air tanks drained (TM 9-2355-106-10)
Air Conditioning (A/C) condenser panel removed (WP 0672)

REMOVAL

WARNING

Air drain valves are under pressure. Wear protective goggles and do not place face in front of air drain valves while draining air reservoirs. Open air drain valves slowly to release air pressure gradually. Failure to comply may result in serious injury or death to personnel.

Do not disconnect any air line or fitting until system pressure has been relieved. Hoses may whip and injure personnel, and air under pressure can penetrate skin. Failure to comply may result in serious injury or death to personnel.

AIR HOSE FITTING REMOVAL AND INSTALLATION - (CONTINUED)

NOTE

Air hose fitting is located in lower front section of right side forward stowage box.

1. Remove air line (Figure 1, Item 4) from fitting (Figure 1, Item 3) using quick connect tool.

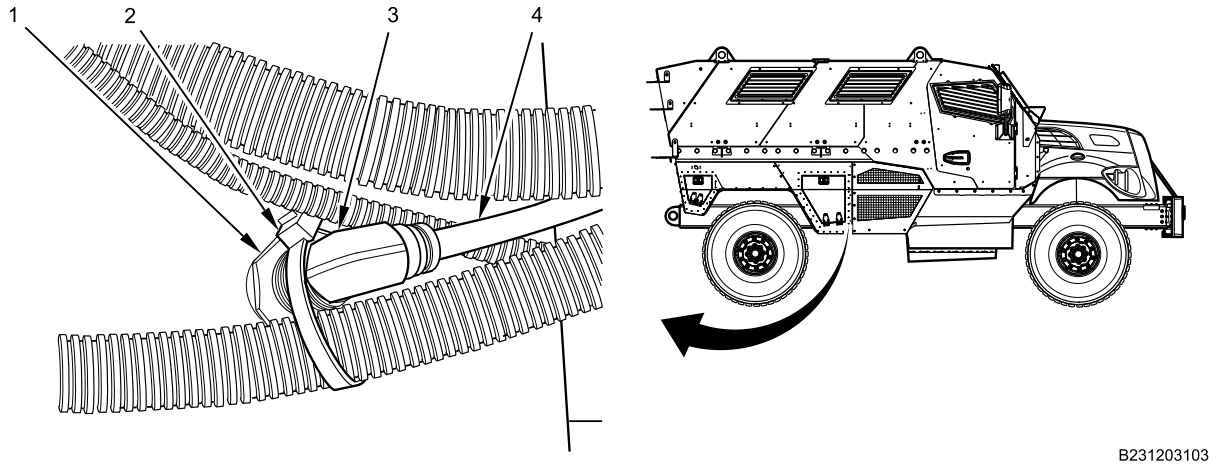

Figure 1. Air Hose Fitting Replacement.

2. Cut cable lock strap (Figure 1, Item 2) holding harness to fitting (Figure 1, Item 3). Discard cable lock strap.
3. Remove nut (Figure 1, Item 1) holding fitting (Figure 1, Item 3) to stowage box and remove fitting.

END OF TASK

INSTALLATION

WARNING

Thread sealing compound is harmful to skin and eyes. If thread sealing compound contacts eyes, rinse thoroughly and contact physician if irritation persists. If skin is contacted, wash thoroughly with soap and water. Failure to comply may result in serious injury to personnel.

NOTE

Apply thread sealing compound to threaded areas of fittings before installation.

AIR HOSE FITTING REMOVAL AND INSTALLATION - (CONTINUED)

1. Position air hose fitting (Figure 2, Item 3) on stowage box.

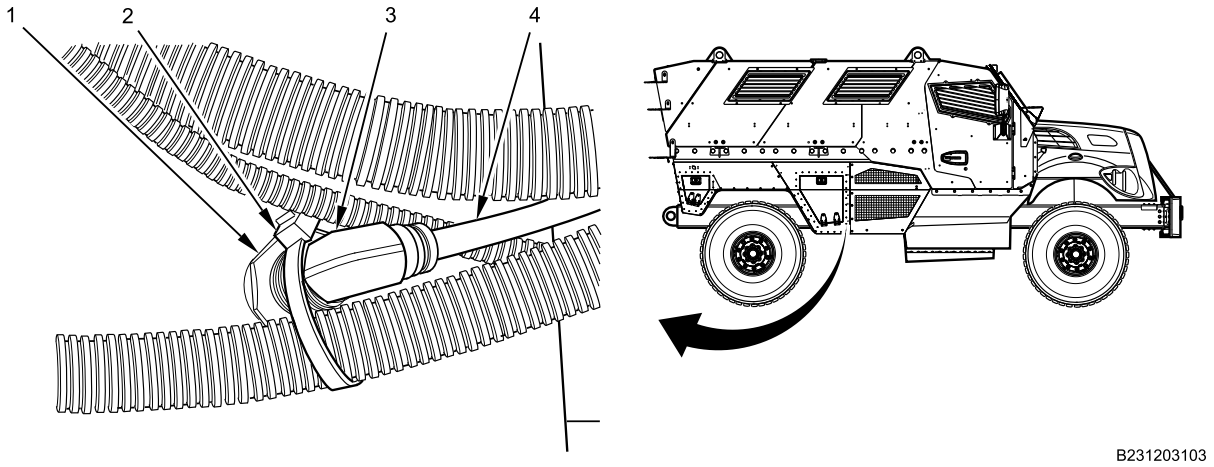

Figure 2. Air Hose Fitting Installation.

2. Install nut (Figure 2, Item 1) securing air hose fitting (Figure 2, Item 3) to stowage box and tighten securely.
3. Connect air hose (Figure 2, Item 4) to air hose fitting (Figure 2, Item 3).
4. Install new cable lock strap (Figure 2, Item 2) to secure harness to fitting (Figure 2, Item 3).

END OF TASK

FOLLOW-ON MAINTENANCE

1. Air Conditioning A/C condenser panel (WP 0672).
2. Turn MAIN POWER switch on (TM 9-2355-106-10).
3. Start engine and allow air brake system pressure to build to normal range (TM 9-2355-106-10).
4. Check for air leaks (TM 9-2355-106-10).
5. Turn engine off (TM 9-2355-106-10).
6. Turn MAIN POWER switch off (TM 9-2355-106-10).
7. Remove wheel chocks (TM 9-2355-106-10).

END OF TASK

END OF WORK PACKAGE

FIELD MAINTENANCE

FRONT BRAKE AIR CHAMBER REMOVAL AND INSTALLATION

INITIAL SETUP:

Tools and Special Tools
General Mechanic's Tool Kit (GMTK) (WP 0795, Item 37)
Brush, wire scratch (WP 0795, Item 22)

Materials/Parts
Compound (WP 0794, Item 13)
Tape (WP 0794, Item 50)
Gloves (WP 0794, Item 18)
Goggles, industrial (WP 0794, Item 20)
Faceshield, industrial (WP 0794, Item 16)
Cable lock strap - (6) (WP 0796, Item 145)
Clip - (2) (WP 0796, Item 106)

References
TM 9-2355-106-10
TM 9-2355-106-23P
WP 0782

Equipment Condition
Parking brake set (TM 9-2355-106-10)
Transmission set in NEUTRAL (N) (TM 9-2355-106-10)
Engine off (TM 9-2355-106-10)
MAIN POWER switch off (TM 9-2355-106-10)
Wheels chocked (TM 9-2355-106-10)
Engine hood open and secured (TM 9-2355-106-10)
Air tanks drained (TM 9-2355-106-10)

WARNING

Engine hood is extremely heavy and requires two-person lift. Ensure that there is adequate space in front of the vehicle to open hood completely without pinning or pinching personnel between hood and any other structure. Use extreme care when working under hood and make sure it is properly supported. Failure to comply may result in serious injury or death to personnel.

Before working on air brake system or any auxiliary pressurized system, make sure air pressure has been drained from all reservoirs. Failure to comply may result in serious injury or death to personnel.

Air drain valves are under pressure. Wear protective goggles and do not place face in front of air drain valves while draining air reservoirs. Open air drain valves slowly to release air pressure gradually. Failure to comply may result in serious injury or death to personnel.

Do not disconnect any air line or fitting until system pressure has been relieved. Hoses may whip and injure personnel, and air under pressure can penetrate skin. Failure to comply may result in serious injury or death to personnel.

Do not operate vehicle with air pressure system loss. Vehicle has reduced or no braking capability and may not stop. Failure to comply may result in damage to equipment and serious injury or death to personnel.

Let air pressure build in both tanks to 100 psi (689 kPa) before releasing the parking brake. Low air pressure may affect vehicle braking capability. Failure to comply may result in injury or death to personnel.

FRONT BRAKE AIR CHAMBER REMOVAL AND INSTALLATION - (CONTINUED)

NOTE

This vehicle has two types of slack adjuster systems, automatic and manual. Automatic has two clevis pins on the slack adjuster, manual has one clevis pin on the slack adjuster.

REMOVAL OF AIR LINE HOSE

1. Remove left air line hose (Figure 1, Item 2) from Antilock Brake System (ABS) modulator valve (Figure 1, Item 1).

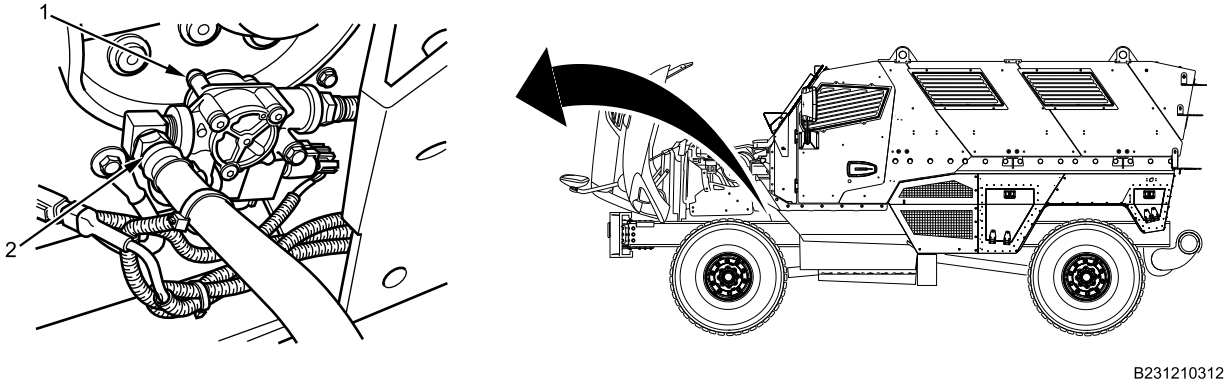

Figure 1. Left Air Line Hose.

2. Remove right air line hose (Figure 2, Item 2) from ABS modulator valve (Figure 2, Item 1).

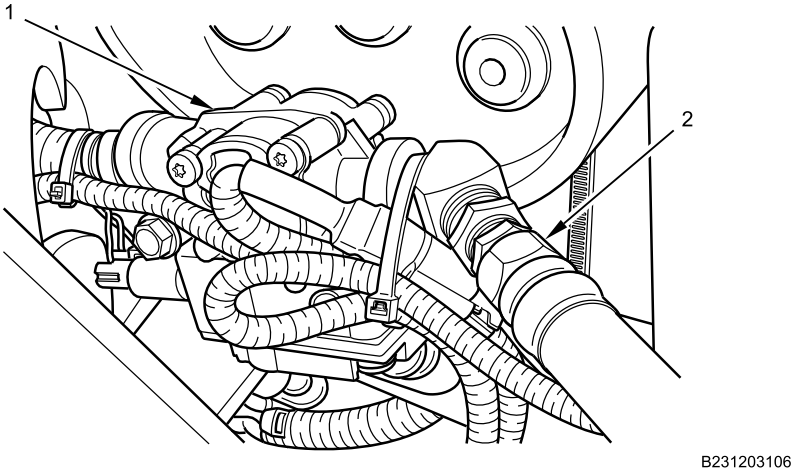

Figure 2. Right Air Line Hose.

END OF TASK

FRONT BRAKE AIR CHAMBER REMOVAL AND INSTALLATION - (CONTINUED)

REMOVAL OF AIR CHAMBER, AUTOMATIC SLACK ADJUSTER (TWO CLEVIS PINS)

1. Measure distance from edge of jam nut (Figure 3, Item 8) to vertical surface of air chamber bracket (Figure 3, Item 6).

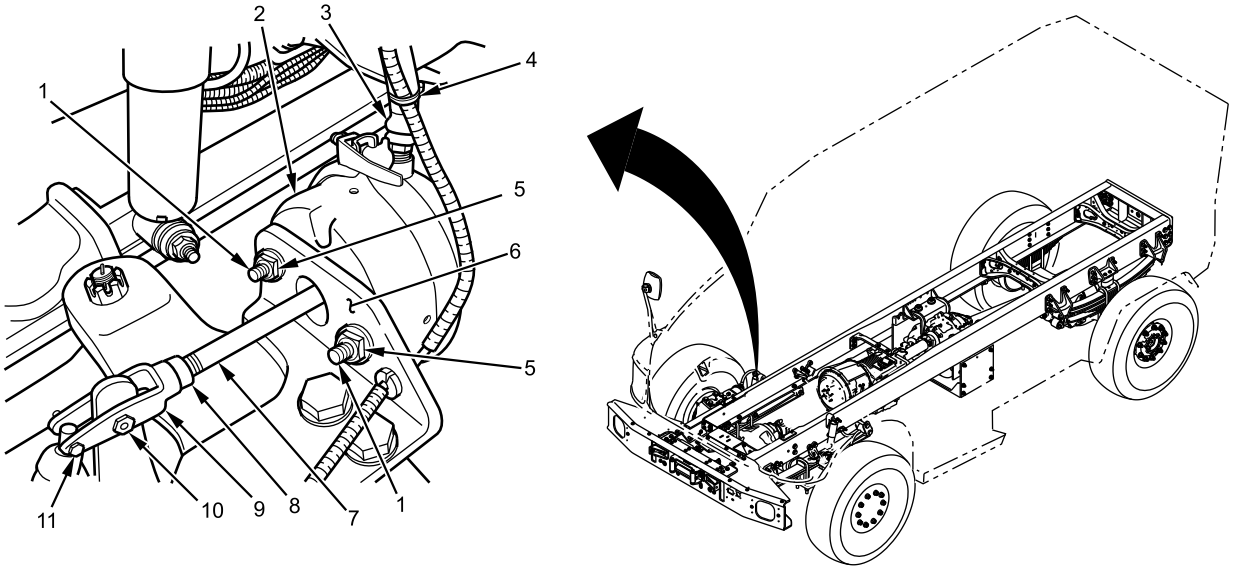

B230603164

Figure 3. Air Chamber – Automatic Slack Adjuster.

2. Record measurement for proper installation.
3. Remove and discard cable lock straps (Figure 3, Item 4) from air line hose (Figure 3, Item 3) and wire harness as necessary.
4. Remove air line hose (Figure 3, Item 3) from air chamber (Figure 3, Item 2).
5. Remove large clevis pin (Figure 3, Item 10) and clip from slack adjuster. Discard clip.
6. Remove small clevis pin (Figure 3, Item 11) and clip from slack adjuster. Discard clip.
7. Loosen jam nut (Figure 3, Item 8).
8. Remove two nuts and two washers (Figure 3, Item 5) from air chamber studs (Figure 3, Item 1).
9. Pull air chamber (Figure 3, Item 2) from air chamber bracket (Figure 3, Item 6) until clevis clears slack adjuster.
10. Remove clevis (Figure 3, Item 9) from air chamber push rod (Figure 3, Item 7).
11. Remove jam nut (Figure 3, Item 8) from air chamber push rod (Figure 3, Item 7).
12. Remove air chamber (Figure 3, Item 2) from air chamber bracket (Figure 3, Item 6).

END OF TASK

FRONT BRAKE AIR CHAMBER REMOVAL AND INSTALLATION - (CONTINUED)

REMOVAL OF AIR CHAMBER, MANUAL SLACK ADJUSTER (ONE CLEVIS PIN)

1. Measure distance from edge of jam nut (Figure 4, Item 8) to vertical surface of air chamber bracket (Figure 4, Item 6).

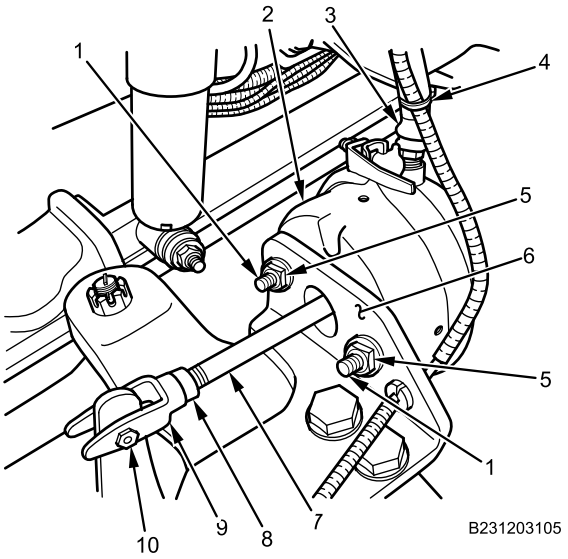

Figure 4. Air Chamber – Manual Slack Adjuster.

2. Record measurement for proper installation.
3. Remove and discard cable lock straps (Figure 4, Item 4) from air line hose (Figure 4, Item 3) and wire harness as necessary.
4. Remove air line hose (Figure 4, Item 3) from air chamber (Figure 4, Item 2).
5. Remove clevis pin (Figure 4, Item 10) and clip from slack adjuster. Discard clip.
6. Loosen jam nut (Figure 4, Item 8).
7. Remove two nuts and two washers (Figure 4, Item 5) from air chamber studs (Figure 4, Item 1).
8. Pull air chamber (Figure 4, Item 2) from air chamber bracket (Figure 4, Item 6) until clevis clears slack adjuster.
9. Remove clevis (Figure 4, Item 9) from air chamber push rod (Figure 4, Item 7).
10. Remove jam nut (Figure 4, Item 8) from air chamber push rod (Figure 4, Item 7).
11. Remove air chamber (Figure 4, Item 2) from air chamber bracket (Figure 4, Item 6).

END OF TASK

FRONT BRAKE AIR CHAMBER REMOVAL AND INSTALLATION - (CONTINUED)

INSTALLATION OF AIR CHAMBER, AUTOMATIC SLACK ADJUSTER (TWO CLEVIS PINS)

WARNING

Corrosion preventive compound is toxic. Use only in well-ventilated area. Do not get in eyes; wear chemical safety goggles and full-face shield when using. Avoid contact with skin and wear rubber or plastic, solvent-resistant gloves. In case of contact, remove contaminated clothing and immediately wash area with soap and water. If compound contacts eyes, flush eyes with large amounts of water for at least 15 minutes and get immediate medical attention. If swallowed, do not induce vomiting; contact a physician immediately. Failure to comply may result in serious injury or death to personnel.

1. Apply corrosion preventive compound on air chamber stud threads (Figure 5, Item 1).

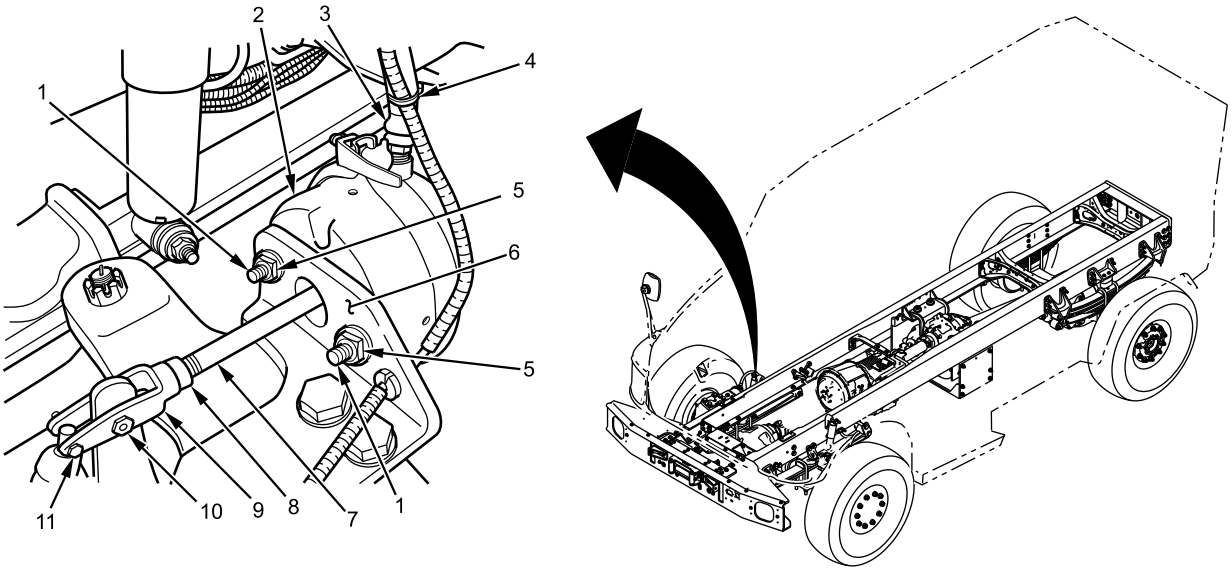

Figure 5. Air Chamber – Automatic Slack Adjuster.

2. Position air chamber pushrod (Figure 5, Item 6) halfway through hole in air chamber bracket (Figure 5, Item 5).
3. Install jam nut (Figure 5, Item 7) on air chamber push rod (Figure 5, Item 6), stopping at measurement taken during removal.
4. Install clevis (Figure 5, Item 8) on air chamber push rod (Figure 5, Item 6).
5. Install air chamber (Figure 5, Item 1) on air chamber bracket (Figure 5, Item 5) with two washers and two nuts (Figure 5, Item 4). Tighten securely.
6. Clean threads on air line hose (Figure 5, Item 2) with wire brush.

FRONT BRAKE AIR CHAMBER REMOVAL AND INSTALLATION - (CONTINUED)

7. With threads from air line hose (Figure 6, Item 2) facing you, apply tape thread sealing compound clockwise around threads.

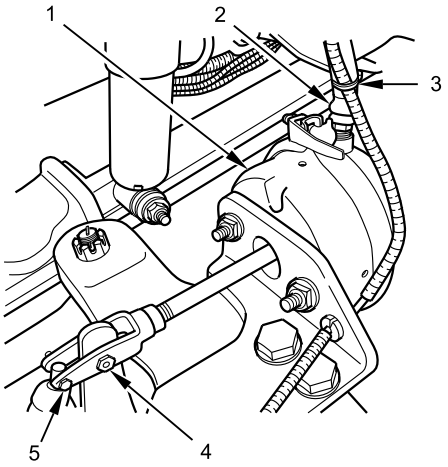

Figure 6. Air Chamber – Automatic Slack Adjuster.

8. Install air line hose (Figure 6, Item 2) on air chamber (Figure 6, Item 1) and tighten securely.
9. Install large clevis pin (Figure 6, Item 4) and new clip on slack adjuster.
10. Install small clevis pin (Figure 6, Item 5) and new clip on slack adjuster.
11. Install new cable lock straps (Figure 6, Item 3) on air chamber hose line and wire harness.

END OF TASK

INSTALLATION OF AIR CHAMBER, MANUAL SLACK ADJUSTER (ONE CLEVIS PIN)

WARNING

Corrosion preventive compound is toxic. Use only in well-ventilated area. Do not get in eyes; wear chemical safety goggles and full-face shield when using. Avoid contact with skin and wear rubber or plastic, solvent-resistant gloves. In case of contact, remove contaminated clothing and immediately wash area with soap and water. If compound contacts eyes, flush eyes with large amounts of water for at least 15 minutes and get immediate medical attention. If swallowed, do not induce vomiting; contact a physician immediately. Failure to comply may result in serious injury or death to personnel.

FRONT BRAKE AIR CHAMBER REMOVAL AND INSTALLATION - (CONTINUED)

1. Apply corrosion preventive compound on air chamber stud threads (Figure 7, Item 1).

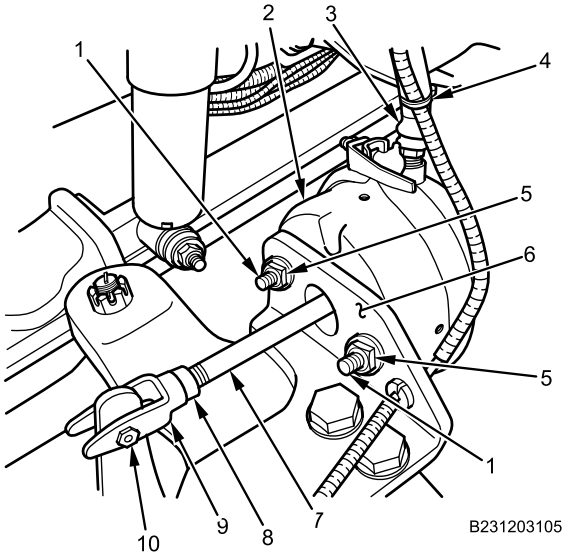

Figure 7. Air Chamber – Manual Slack Adjuster.

2. Position air chamber pushrod (Figure 5, Item 7) halfway through hole in air chamber bracket (Figure 5, Item 6).
3. Install jam nut (Figure 7, Item 8) on air chamber push rod (Figure 7, Item 7) stopping at measurement taken during removal.
4. Install clevis (Figure 7, Item 9) on air chamber push rod (Figure 7, Item 7).
5. Install air chamber (Figure 5, Item 2) on air chamber bracket (Figure 5, Item 6) with two washers and two nuts (Figure 5, Item 5). Tighten securely.
6. Clean threads on air line hose (Figure 7, Item 3) with wire brush.
7. With threads from air line hose (Figure 7, Item 3) facing you, apply tape thread sealing compound clockwise around threads.
8. Install air line hose (Figure 7, Item 3) on air chamber (Figure 7, Item 2) and tighten securely.
9. Install clevis pin (Figure 7, Item 10) and new clip on slack adjuster.
10. Install new cable lock straps (Figure 7, Item 4) as necessary.

END OF TASK

FRONT BRAKE AIR CHAMBER REMOVAL AND INSTALLATION - (CONTINUED)

INSTALLATION OF AIR LINE HOSE

1. Clean threads on left air line hose (Figure 8, Item 2) with wire brush.

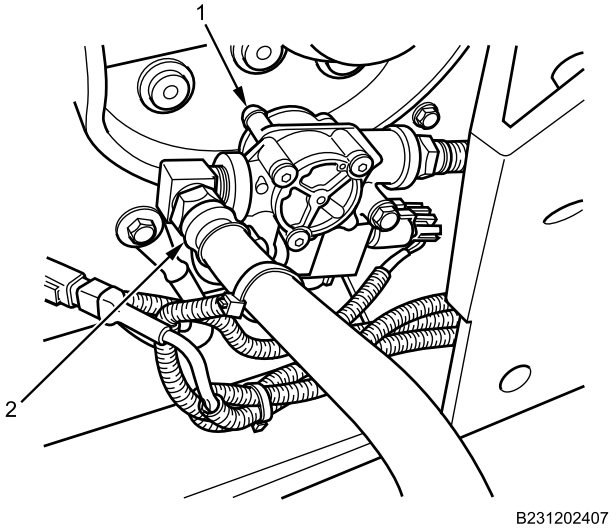

Figure 8. Left Air Line Hose.

2. With threads on air line hose (Figure 8, Item 2) facing you, apply tape thread sealing compound clockwise on threads.
3. Install air line hose (Figure 8, Item 2) onto ABS modulator valve (Figure 8, Item 1). Tighten securely.
4. Clean threads on air line hose (Figure 9, Item 2).

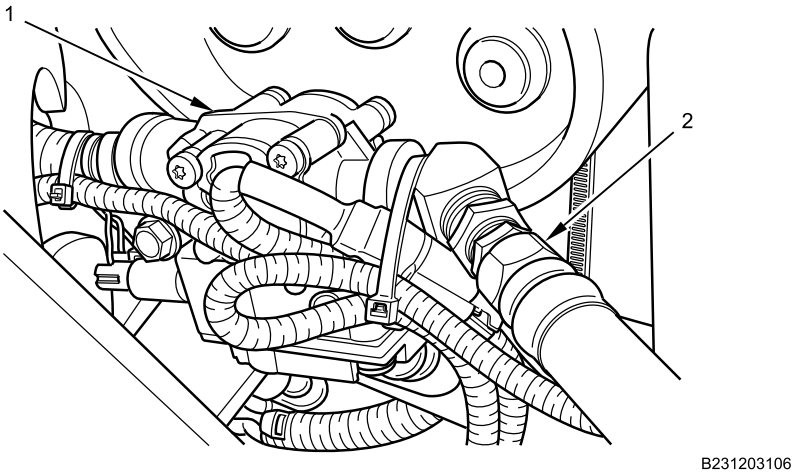

Figure 9. Right Air Line Hose.

5. With threads on air line hose (Figure 9, Item 2) facing you, apply tape thread sealing compound clockwise on the threads.
6. Install air line hose (Figure 9, Item 2) onto ABS modulator valve (Figure 9, Item 1). Tighten securely.

FRONT BRAKE AIR CHAMBER REMOVAL AND INSTALLATION - (CONTINUED)

END OF TASK

FOLLOW-ON MAINTENANCE

1. Adjust brake shoes (WP 0484).
2. Start engine and allow air brake system pressure to build to normal range (TM 9-2355-106-10).
3. Check for leaks (TM 9-2355-106-10).
4. Turn engine off (TM 9-2355-106-10).
5. Close engine hood (TM 9-2355-106-10).
6. Remove wheel chocks (TM 9-2355-106-10).

END OF TASK

END OF WORK PACKAGE

FIELD MAINTENANCE

REAR BRAKE AIR HOSES REMOVAL AND INSTALLATION

INITIAL SETUP:

Tools and Special Tools
General Mechanic's Tool Kit (GMTK) (WP 0795, Item 37)

Materials/Parts
Cable lock strap (WP 0796, Item 120)

References
TM 9-2355-106-10
TM 9-2355-106-23P
WP 0782

Equipment Condition
Parking brake set (TM 9-2355-106-10)
Transmission set in NEUTRAL (N) (TM 9-2355-106-10)
Engine off (TM 9-2355-106-10)
MAIN POWER switch off (TM 9-2355-106-10)
Wheels chocked (TM 9-2355-106-10)
Air tanks drained (TM 9-2355-106-10)

WARNING

Before working on air brake system or any auxiliary pressurized system, make sure air pressure has been drained from all reservoirs. Failure to comply may result in serious injury or death to personnel.

Do not disconnect any air line or fitting until system pressure has been relieved. Hoses may whip and injure personnel, and air under pressure can penetrate skin. Failure to comply may result in serious injury or death to personnel.

NOTE

Left side shown; right side similar.

Note location of cable lock strap for installation.

REMOVAL

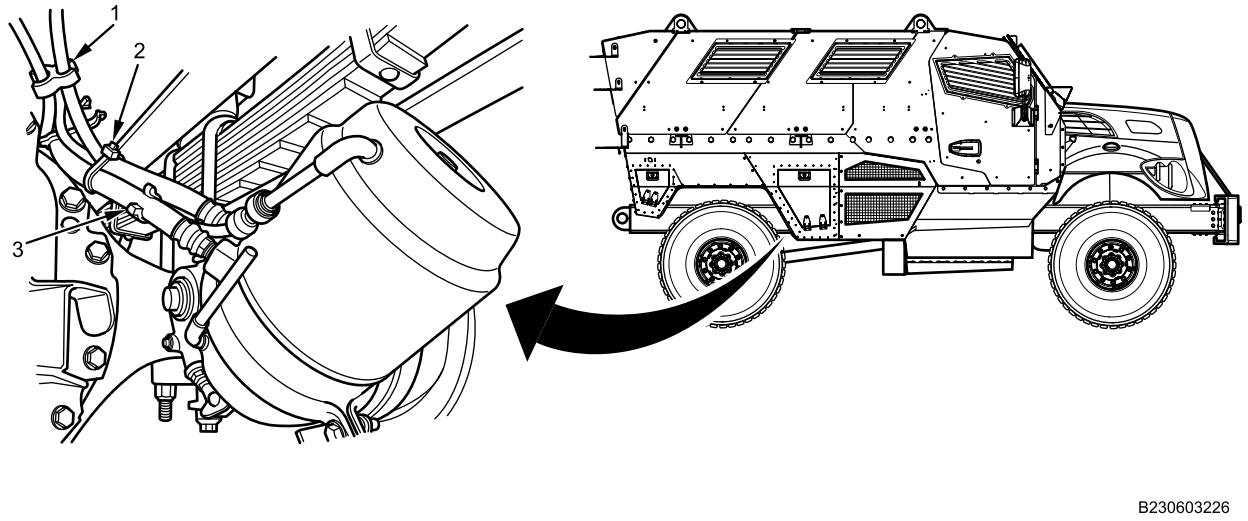

Figure 1. Rear Brake Chamber Removal.

1. Remove and discard cable lock straps (Figure 1, Item 2) that secure air hoses.
2. Remove brake hose clip (Figure 1, Item 1) from air lines.
3. Remove ABS sensor wire clip (Figure 1, Item 3) from air line.

REAR BRAKE AIR HOSES REMOVAL AND INSTALLATION - (CONTINUED)

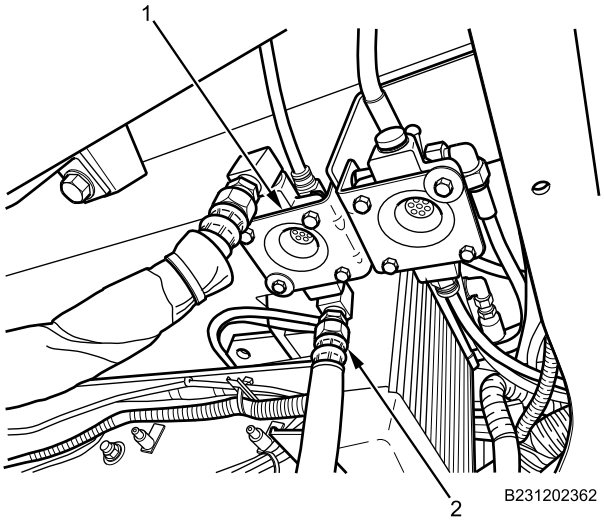

Figure 2. Quick Release Valve.

4. Remove parking brake air hose (Figure 2, Item 2) from quick release valve (Figure 2, Item 1) on frame rail.

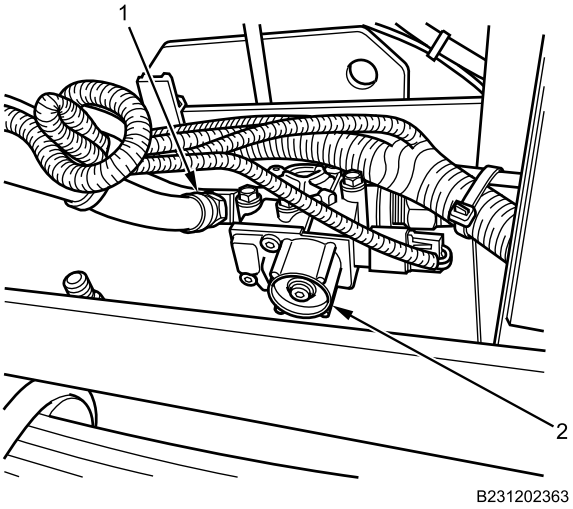

Figure 3. Modulator Valve.

5. Remove service brake air hose (Figure 3, Item 1) from modulator valve (Figure 3, Item 2) on frame rail.

REAR BRAKE AIR HOSES REMOVAL AND INSTALLATION - (CONTINUED)

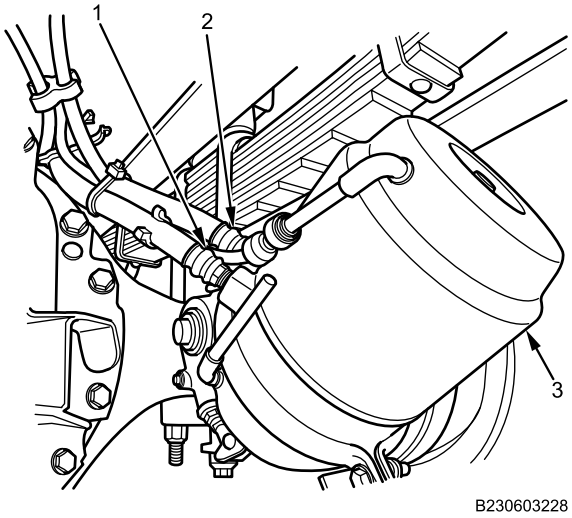

Figure 4. Rear Brake Chamber.

6. Remove parking brake air hose (Figure 4, Item 2) on brake chamber (Figure 4, Item 3).
7. Remove service brake air hose (Figure 4, Item 1) on brake chamber (Figure 4, Item 3).

END OF TASK

INSTALLATION

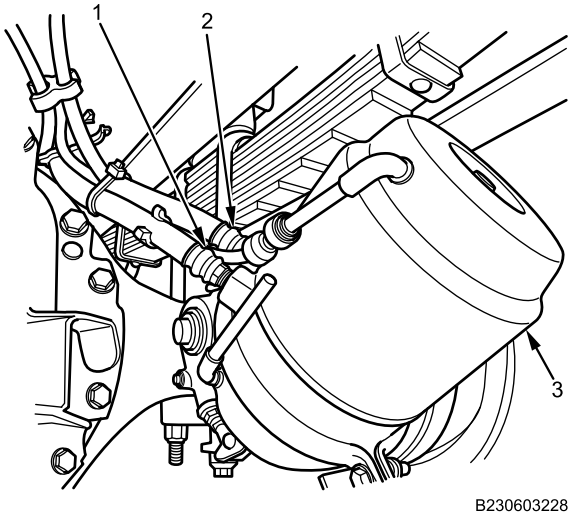

Figure 5. Rear Brake Chamber.

1. Install parking brake air hose (Figure 5, Item 2) on brake chamber (Figure 5, Item 3).
2. Install service brake air hose (Figure 5, Item 1) on brake chamber (Figure 5, Item 3).

REAR BRAKE AIR HOSES REMOVAL AND INSTALLATION - (CONTINUED)

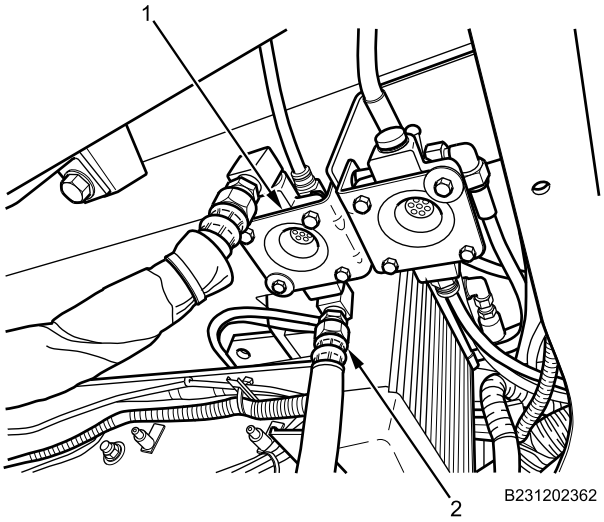

Figure 6. Quick Release Valve.

3. Install parking brake air hose (Figure 6, Item 2) on quick release valve (Figure 6, Item 1) on frame rail.

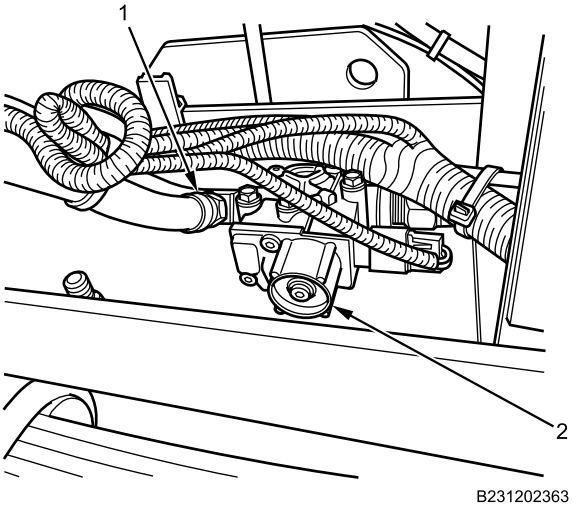

Figure 7. Modulator Valve.

4. Install service brake air hose (Figure 7, Item 1) on modulator valve (Figure 7, Item 2) on frame rail.

REAR BRAKE AIR HOSES REMOVAL AND INSTALLATION - (CONTINUED)

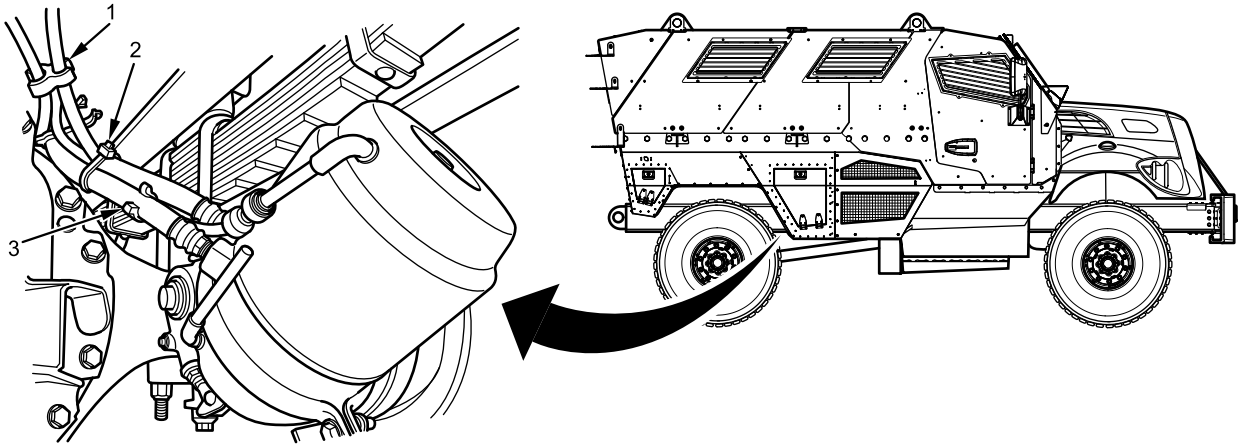

Figure 8. Brake Chamber.

5. Secure air hoses with new cable lock straps (Figure 8, Item 2).
6. Install ABS sensor wire clip (Figure 8, Item 3) to air line.
7. Install hose clip (Figure 8, Item 1) to air lines.

END OF TASK

FOLLOW-ON MAINTENANCE

1. Turn MAIN POWER switch on (TM 9-2355-106-10).
2. Start engine and allow air brake system pressure to build to normal range (TM 9-2355-106-10).
3. Check for air leaks (TM 9-2355-106-10).
4. Turn engine off (TM 9-2355-106-10).
5. Turn MAIN POWER switch off (TM 9-2355-106-10).
6. Remove wheel chocks (TM 9-2355-106-10).

END OF TASK

END OF WORK PACKAGE

FIELD MAINTENANCE

REAR BRAKE AIR CHAMBER REMOVAL AND INSTALLATION

INITIAL SETUP:

Tools and Special Tools
General Mechanic's Tool Kit (GMTK) (WP 0795, Item 37)
Brush, wire, scratch (WP 0795, Item 22)

Materials/Parts
Compound (WP 0794, Item 13)
Tape thread sealing compound (WP 0794, Item 50)
Cable lock strap - (5) (WP 0796, Item 124)
Clip - (2) (WP 0796, Item 106)
Gloves (WP 0794, Item 18)

References
TM 9-2355-106-10
TM 9-2355-106-23P
WP 0782

Equipment Condition
Parking brake set (TM 9-2355-106-10)
Transmission set in NEUTRAL (N) (TM 9-2355-106-10)
Engine shut off (TM 9-2355-106-10)
MAIN POWER switch off (TM 9-2355-106-10)
Wheels chocked (TM 9-2355-106-10)
Air tanks drained (TM 9-2355-106-10)
Rear brakes caged (TM 9-2355-106-10)

WARNING

Before working on air brake system or any auxiliary pressurized system, make sure air pressure has been drained from all reservoirs. Failure to comply may result in serious injury or death to personnel.

Air drain valves are under pressure. Wear protective goggles and do not place face in front of air drain valves while draining air reservoirs. Open air drain valves slowly to release air pressure gradually. Failure to comply may result in serious injury or death to personnel.

Do not disconnect any air line or fitting until system pressure has been relieved. Hoses may whip and injure personnel, and air under pressure can penetrate skin. Failure to comply may result in serious injury or death to personnel.

Do not operate vehicle with air pressure system loss. Vehicle has reduced or no braking capability and may not stop. Failure to comply may result in damage to equipment and serious injury or death to personnel.

Let air pressure build in both tanks to 100 psi (689 kPa) before releasing the parking brake. Low air pressure may affect vehicle braking capability. Failure to comply may result in injury or death to personnel.

NOTE

Left side shown; right side similar.

REAR BRAKE AIR CHAMBER REMOVAL AND INSTALLATION - (CONTINUED)

REMOVAL

1. Remove and discard cable lock straps (Figure 1, Item 1) as necessary.

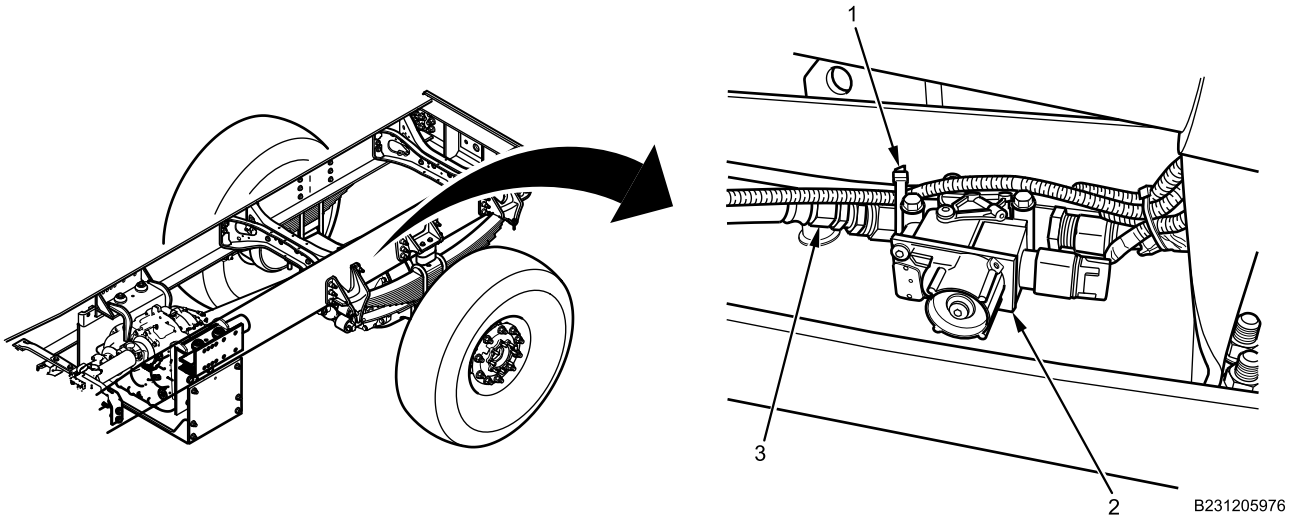

Figure 1. Modulator Valve.

2. Remove air line hose (Figure 1, Item 3) from Antilock Brake System (ABS) modulator valve (Figure 1, Item 2).
3. Remove air line hose (Figure 2, Item 2) from air line connector (Figure 2, Item 1).

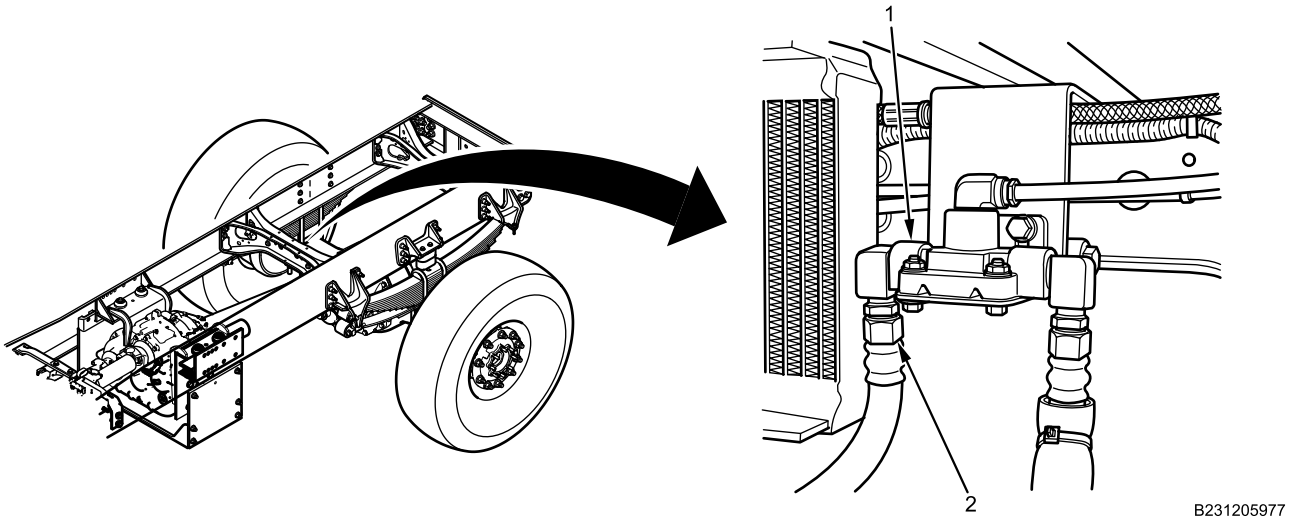

Figure 2. Air Line Hose.

REAR BRAKE AIR CHAMBER REMOVAL AND INSTALLATION - (CONTINUED)

4. Hold brake chamber band clamp nut (Figure 3, Item 2) and remove ABS sensor wire bracket nut (Figure 3, Item 3).

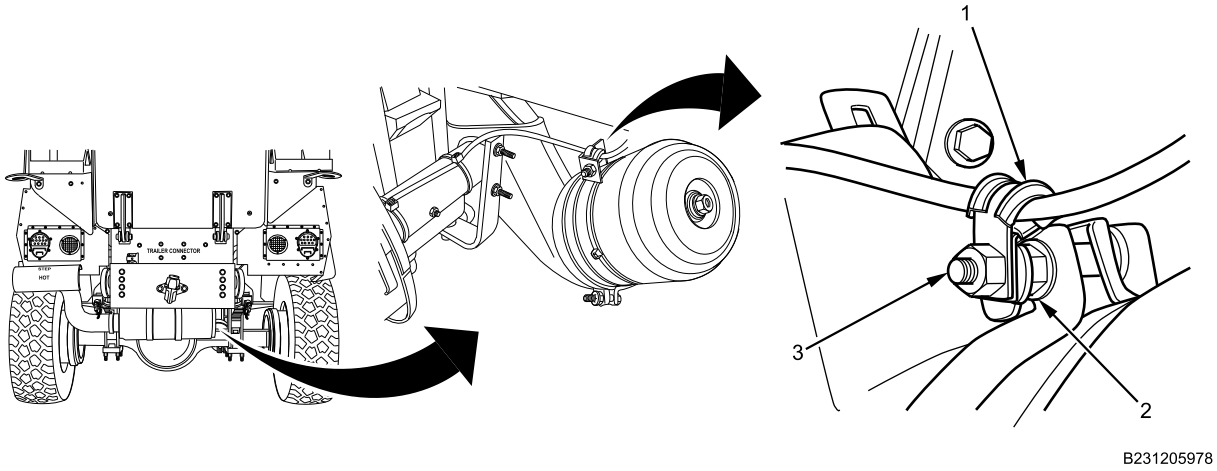

Figure 3. ABS Sensor Wire Bracket Nut.

5. Remove ABS sensor wire bracket (Figure 3, Item 1) from brake chamber.

END OF TASK

REAR BRAKE AIR CHAMBER REMOVAL AND INSTALLATION - (CONTINUED)

REMOVAL OF AIR CHAMBER SLACK ADJUSTER WITH TWO CLEVIS PINS

1. Remove clip (Figure 4, Item 9) and small clevis pin (Figure 4, Item 10) from slack adjuster. Discard clip.

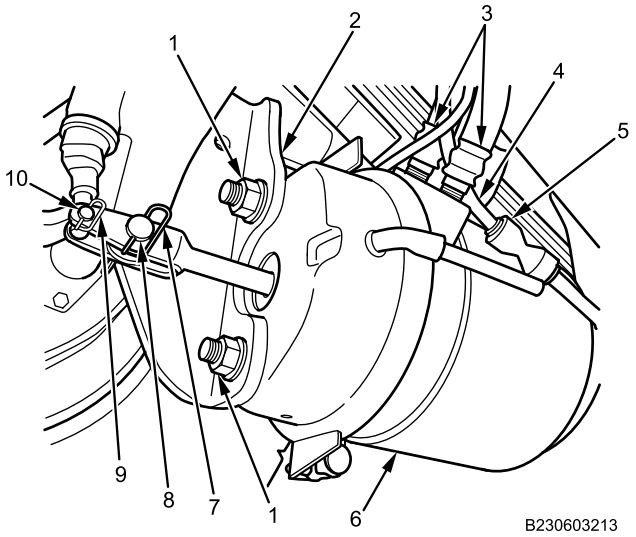

Figure 4. Air Chamber Slack Adjuster with Two Clevis Pins.

2. Remove clip (Figure 4, Item 7) and large clevis pin (Figure 4, Item 8) from slack adjuster. Discard clip.
3. Disconnect air vent nylon hose (Figure 4, Item 4) from air vent hose connector (Figure 4, Item 5).
4. Remove two air hoses (Figure 4, Item 3) from rear air brake chamber (Figure 4, Item 6).

NOTE

Note mounting orientation of air chamber during removal for ease of installation.

5. Remove two nuts (Figure 4, Item 1), two washers, and air chamber (Figure 4, Item 6) from air chamber bracket (Figure 4, Item 2).

END OF TASK

REAR BRAKE AIR CHAMBER REMOVAL AND INSTALLATION - (CONTINUED)

REMOVAL OF AIR CHAMBER SLACK ADJUSTER WITH ONE CLEVIS PIN

1. Remove clip (Figure 5, Item 7) and clevis pin (Figure 5, Item 6) from slack adjuster. Discard clip.

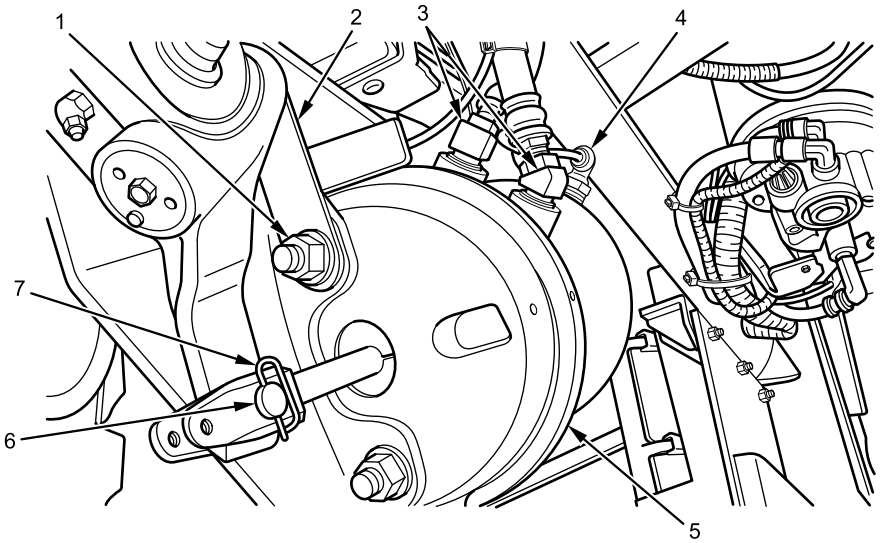

Figure 5. Air Chamber Slack Adjuster with One Clevis Pin.

2. Disconnect air vent nylon hose (Figure 5, Item 4) from air chamber (Figure 5, Item 5).
3. Remove two air line hoses (Figure 5, Item 3) from rear air brake chamber (Figure 5, Item 5).

NOTE

Note mounting orientation of air chamber during removal for installation.

4. Remove two nuts (Figure 5, Item 1), two washers, and air chamber (Figure 5, Item 6) from air chamber bracket (Figure 5, Item 2).

END OF TASK

REAR BRAKE AIR CHAMBER REMOVAL AND INSTALLATION - (CONTINUED)

INSTALLATION OF AIR CHAMBER SLACK ADJUSTER WITH TWO CLEVIS PINS

WARNING

Corrosion preventive compound is toxic. Use only in well-ventilated area. Do not get in eyes; wear chemical safety goggles and full-face shield when using. Avoid contact with skin and wear rubber or plastic, solvent-resistant gloves. In case of contact, remove contaminated clothing and immediately wash area with soap and water. If compound contacts eyes, flush eyes with large amounts of water for at least 15 minutes and get immediate medical attention. If swallowed, do not induce vomiting; contact a physician immediately. Failure to comply may result in serious injury or death to personnel.

1. Clean threads on air line hoses (Figure 6, Item 3) with wire brush.

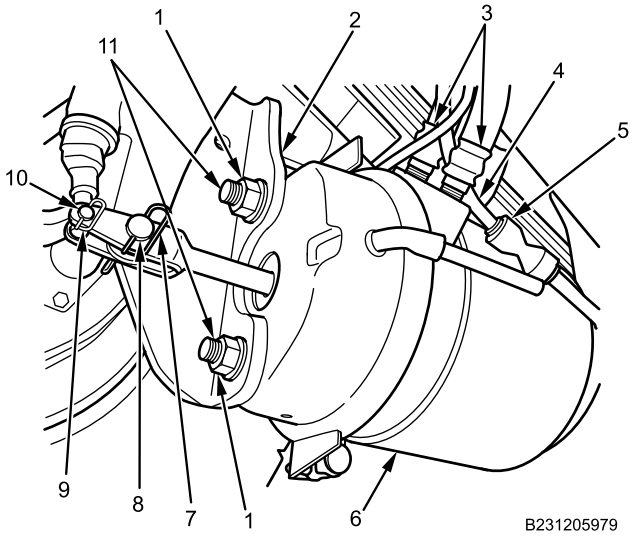

Figure 6. Air Chamber Slack Adjuster with Two Clevis Pins.

2. With threads on two air line hoses (Figure 6, Item 3) facing you, apply tape thread sealing compound clockwise on threads (Figure 6, Item 11).
3. Apply corrosion preventive compound on two air chamber bolt threads (Figure 6, Item 11).
4. Install air chamber (Figure 6, Item 6) on air chamber bracket (Figure 6, Item 2) with two air chamber bolts (Figure 6, Item 11), washers, and nuts (Figure 6, Item 1). Tighten nuts securely.
5. Connect two air line hoses (Figure 6, Item 3) to air chamber (Figure 6, Item 6).
6. Install large clevis pin (Figure 6, Item 8) and new clip (Figure 6, Item 7) on slack adjuster.
7. Install small clevis pin (Figure 6, Item 10) and new clip (Figure 6, Item 9) on slack adjuster.
8. Connect air vent nylon hose (Figure 6, Item 4) to air vent hose connector (Figure 6, Item 5).

END OF TASK

REAR BRAKE AIR CHAMBER REMOVAL AND INSTALLATION - (CONTINUED)

INSTALLATION OF AIR CHAMBER SLACK ADJUSTER WITH ONE CLEVIS PIN

WARNING

Corrosion preventive compound is toxic. Use only in well-ventilated area. Use approved respirator with dual organic vapor/mist and particulate cartridge. Do not get in eyes; wear chemical safety goggles and full-face shield when using. Avoid contact with skin and wear rubber or plastic, solvent-resistant gloves. In case of contact, remove contaminated clothing and immediately wash area with soap and water. If compound contacts eyes, flush eyes with large amounts of water for at least 15 minutes and get immediate medical attention. If swallowed, do not induce vomiting; contact a physician immediately. Failure to comply may result in serious injury or death to personnel.

1. Clean threads on air line hoses (Figure 7, Item 3) with wire brush.

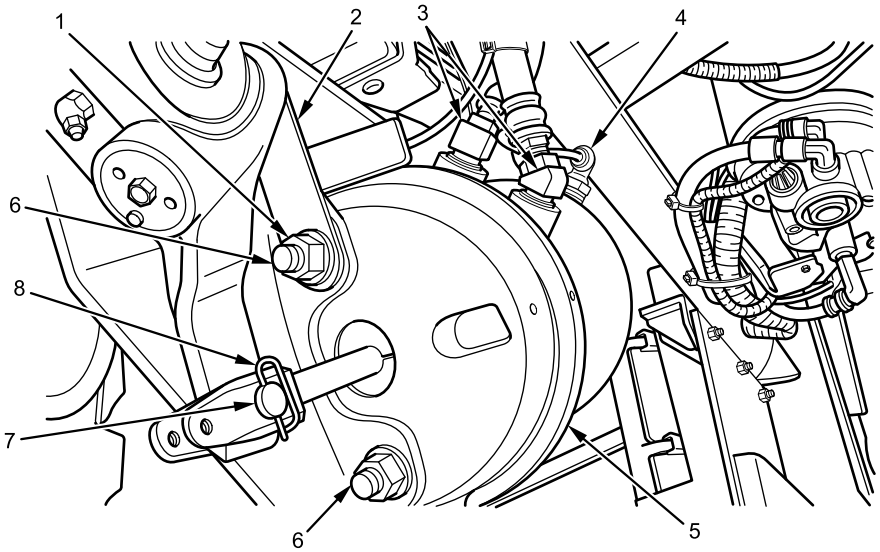

Figure 7. Air Chamber Slack Adjuster with One Clevis Pin.

2. With threads on air line hoses (Figure 7, Item 3) facing you, apply tape thread sealing compound clockwise on threads.
3. Apply corrosion preventive compound on two air chamber bolt threads (Figure 7, Item 6).
4. Install air chamber (Figure 7, Item 5) on air chamber bracket (Figure 7, Item 2) with two air chamber bolts (Figure 7, Item 6), washers, and nuts (Figure 7, Item 1) and tighten securely.
5. Connect two air line hoses (Figure 7, Item 3) to air chamber (Figure 7, Item 7).
6. Install clevis pin (Figure 7, Item 7) and new clip (Figure 7, Item 8) on slack adjuster.
7. Connect air vent nylon hose (Figure 7, Item 4) to air chamber (Figure 7, Item 5).

END OF TASK

REAR BRAKE AIR CHAMBER REMOVAL AND INSTALLATION - (CONTINUED)

INSTALLATION

1. Install ABS sensor wire retaining bracket (Figure 8, Item 2) to brake chamber (Figure 8, Item 1).

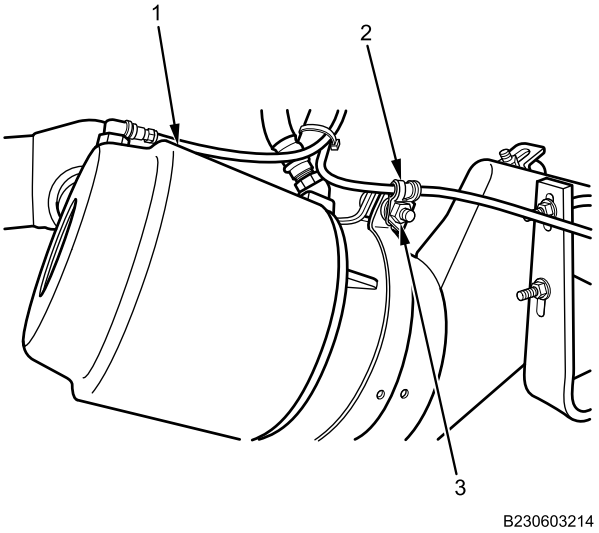

Figure 8. ABS Sensor Wire Bracket.

2. Install nut (Figure 8, Item 3) to ABS sensor wire retaining bracket (Figure 8, Item 2) and tighten securely.
3. Clean threads on air line hose connector (Figure 9, Item 2) with wire brush.

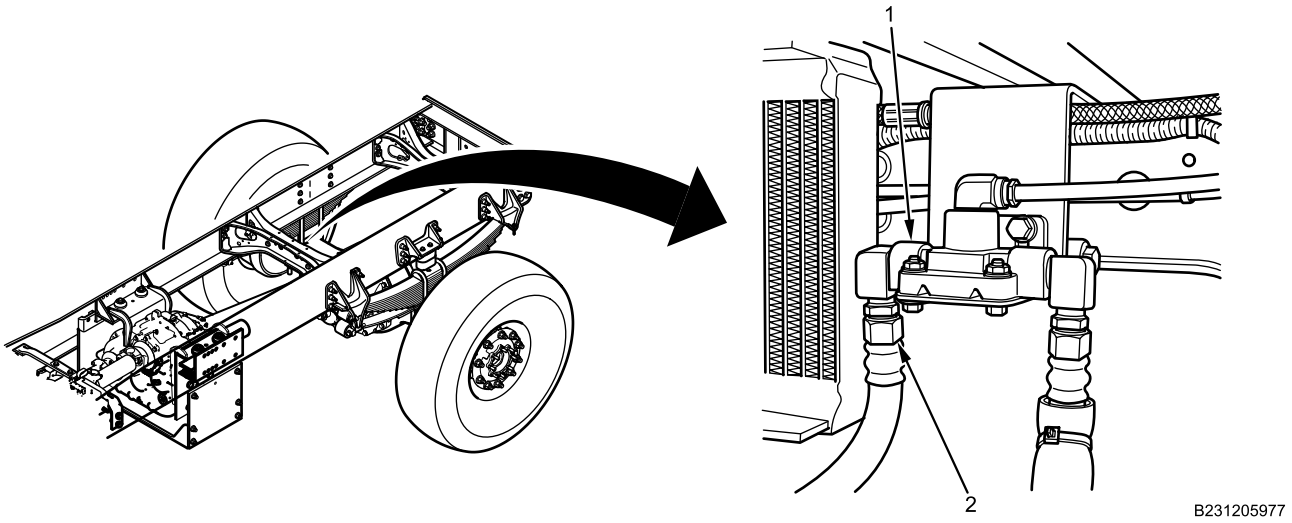

Figure 9. Air Line Hose.

4. Apply tape thread sealing compound clockwise on threads (Figure 9, Item 2).
5. Install air line hose (Figure 9, Item 2) on air line hose connector (Figure 9, Item 1) and tighten securely.
6. Clean threads on ABS modulator valve (Figure 10, Item 3) with wire brush.

REAR BRAKE AIR CHAMBER REMOVAL AND INSTALLATION - (CONTINUED)

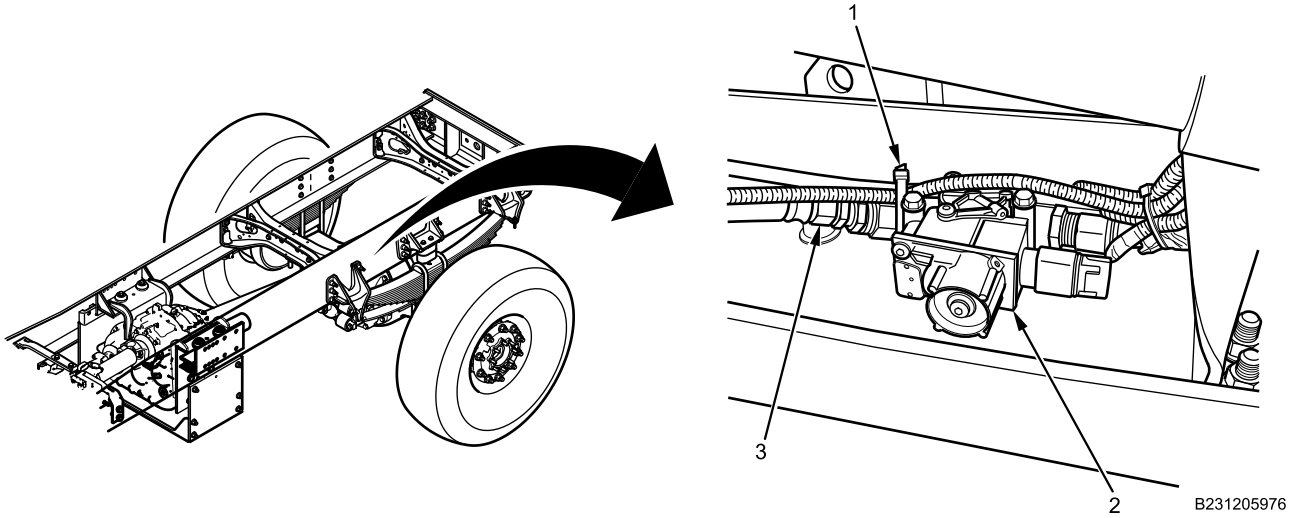

Figure 10. Modulator Valve.

7. Apply tape thread sealing compound clockwise on threads (Figure 10, Item 3).
8. Install air line hose (Figure 10, Item 3) on ABS modulator valve (Figure 10, Item 2) and tighten securely.
9. Install new cable lock straps (Figure 10, Item 1).

END OF TASK

FOLLOW-ON MAINTENANCE

1. Adjust brake shoes (WP 0484).
2. Uncage rear brakes (TM 9-2355-106-10).
3. Turn MAIN POWER switch on (TM 9-2355-106-10).
4. Start engine and allow air brake system pressure to build to normal range (TM 9-2355-106-10).
5. Check for leaks (TM 9-2355-106-10).
6. Remove wheel chocks (TM 9-2355-106-10).
7. Test drive to verify proper brake operation (TM 9-2355-106-10).
8. Turn engine off (TM 9-2355-106-10).
9. Turn MAIN POWER switch off (TM 9-2355-106-10).

END OF TASK

END OF WORK PACKAGE

FIELD MAINTENANCE

AIR DRYER REMOVAL AND INSTALLATION

INITIAL SETUP:

Tools and Special Tools
General Mechanic's Tool Kit (GMTK) (WP 0795, Item 37)
Wrench, torque, 20-100 lb-ft, 3/8-inch drive (WP 0795, Item 141)
Socket, deep well, 3/8-inch drive, 6 pt, 15 mm (WP 0795, Item 100)

Materials/Parts
Compound (WP 0794, Item 13)
Goggles, industrial (WP 0794, Item 20)
Faceshield, industrial (WP 0794, Item 16)
Grease (WP 0794, Item 22)
Cable lock strap - (1) (WP 0796, Item 120)
Gloves (WP 0794, Item 18)

References
TM 9-2355-106-10
TM 9-2355-106-23P
WP 0782

Equipment Condition
Parking brake set (TM 9-2355-106-10)
Transmission set in NEUTRAL (N) (TM 9-2355-106-10)
Engine off (TM 9-2355-106-10)
MAIN POWER switch off (TM 9-2355-106-10)
Wheels chocked (TM 9-2355-106-10)
Air pressure drained from all air brake reservoirs (TM 9-2355-106-10)

REMOVAL

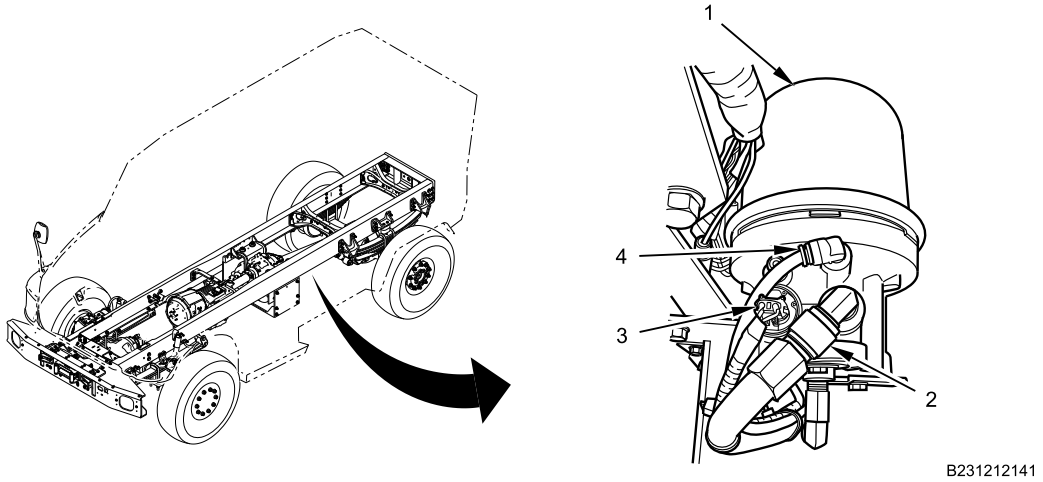

Figure 1. Air Dryer Connections.

1. Disconnect air dryer supply air line connection (Figure 1, Item 2) from air dryer (Figure 1, Item 1).
2. Disconnect air dryer heater and thermostat assembly electrical harness connection (Figure 1, Item 3) from air dryer (Figure 1, Item 1).
3. Disconnect air dryer governor control air line connection (Figure 1, Item 4) from air dryer (Figure 1, Item 1).

AIR DRYER REMOVAL AND INSTALLATION - (CONTINUED)

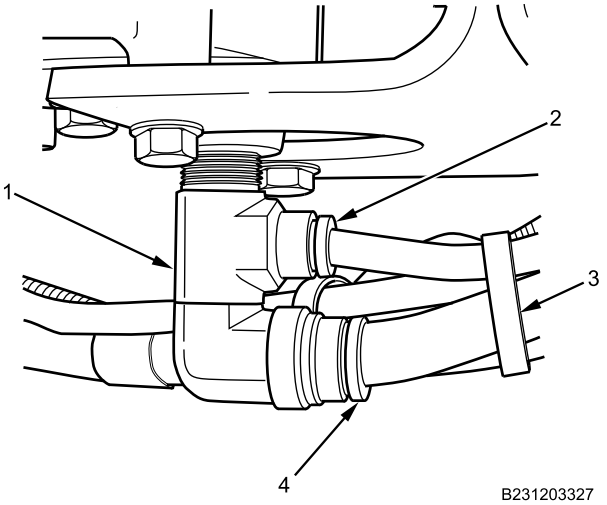

Figure 2. Air Dryer Connections.

4. Remove and discard cable lock strap (Figure 2, Item 3) from air lines.
5. Disconnect air dryer delivery air line connection (Figure 2, Item 4) from air dryer (Figure 2, Item 1).
6. Disconnect air dryer governor supply air line connection (Figure 2, Item 2) from air dryer (Figure 2, Item 1).
7. Remove all fittings from air dryer.

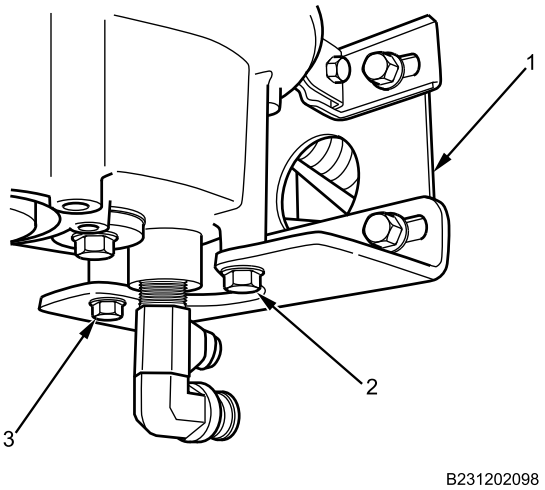

Figure 3. Air Dryer Support Bracket Bolts.

8. Remove air dryer support bracket lower bolts (Figure 3, Item 2 and 3) from air dryer support bracket (Figure 3, Item 1).

AIR DRYER REMOVAL AND INSTALLATION - (CONTINUED)

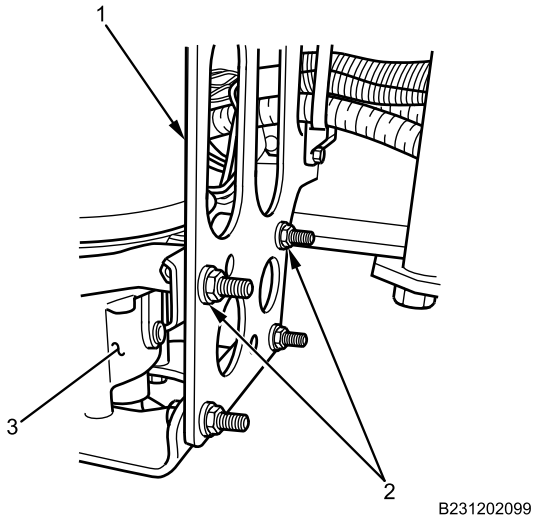

Figure 4. Air Dryer Support Bracket Nuts.

9. Remove air dryer support bracket side nuts and bolts (Figure 4, Item 2) from air dryer support bracket (Figure 4, Item 1) and remove air dryer (Figure 4, Item 3).

END OF TASK

AIR DRYER REMOVAL AND INSTALLATION - (CONTINUED)

INSTALLATION

WARNING

Corrosion preventive compound is toxic. Use only in well-ventilated area. Do not get in eyes; wear chemical safety goggles and full-face shield when using. Avoid contact with skin and wear rubber or plastic, solvent-resistant gloves. In case of contact, remove contaminated clothing and immediately wash area with soap and water. If compound contacts eyes, flush eyes with large amounts of water for at least 15 minutes and get immediate medical attention. If swallowed, do not induce vomiting; contact a physician immediately. Failure to comply may result in serious injury or death to personnel.

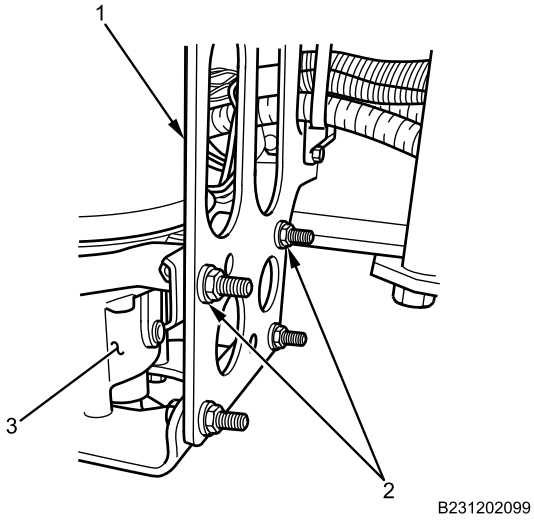

Figure 5. Air Dryer Support Bracket Nuts.

1. Apply corrosion preventive compound to air dryer support bracket side nuts and bolts (Figure 5, Item 2).
2. Place air dryer (Figure 5, Item 3) into position on air dryer support bracket (Figure 5, Item 1) and, install air dryer support bracket side nuts and bolts (Figure 5, Item 2) on air dryer support bracket.
3. Torque air dryer support bracket side nuts (Figure 5, Item 2) to 25 lb-ft (34 N•m).

AIR DRYER REMOVAL AND INSTALLATION - (CONTINUED)

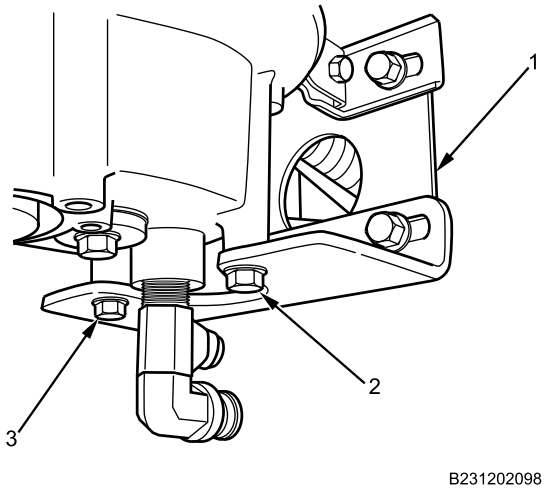

Figure 6. Air Dryer Support Bracket Bolts.

4. Apply corrosion preventive compound to air dryer support bracket lower bolts (Figure 6, Item 2 and 3).
5. Install air dryer support bracket lower bolts (Figure 6, Item 2 and 3) on air dryer support bracket (Figure 6, Item 1) and torque bolts to 25 lb-ft (34 N•m).
6. Install all fittings on air dryer.

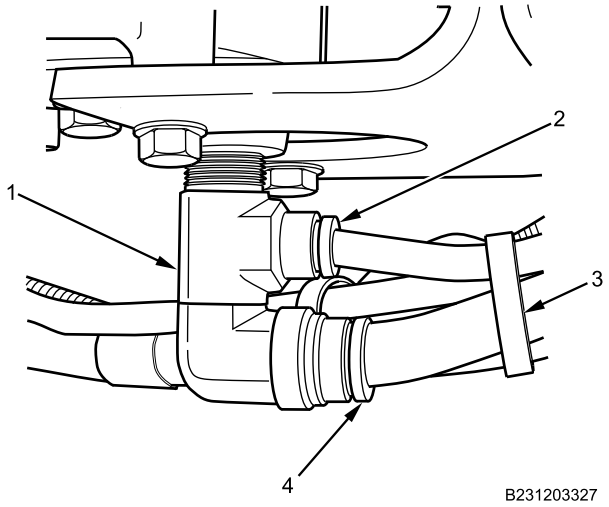

Figure 7. Air Dryer Connections.

7. Connect air dryer governor supply air line connection (Figure 7, Item 2) on air dryer (Figure 7, Item 1).
8. Connect air dryer delivery air line connection (Figure 7, Item 4) on air dryer (Figure 7, Item 1).
9. Install new cable lock strap (Figure 7, Item 3) on air lines.

AIR DRYER REMOVAL AND INSTALLATION - (CONTINUED)

WARNING

Dielectric grease is harmful to skin and eyes. If grease contacts eyes, rinse thoroughly and contact physician if irritation persists. If skin is contacted, wash thoroughly with soap and water. Failure to comply may result in serious injury to personnel.

10. Apply dielectric grease in wiring harness connector (Figure 8, Item 3).

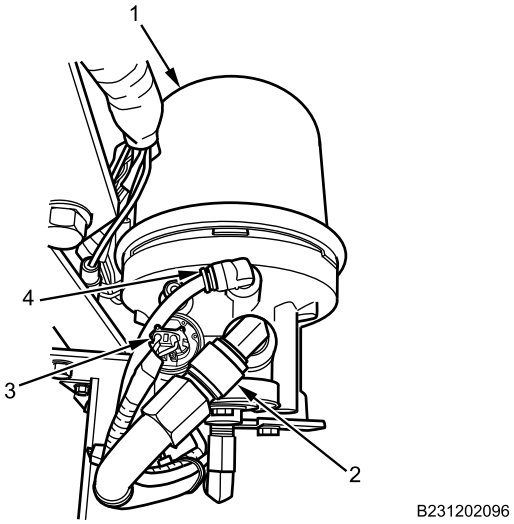

Figure 8. Air Dryer Connections.

11. Connect air dryer governor control air line connection (Figure 8, Item 4) on air dryer (Figure 8, Item 1).
12. Connect air dryer heater and thermostat assembly electrical harness connection (Figure 8, Item 3) on air dryer (Figure 8, Item 1).
13. Connect air dryer supply air line connection (Figure 8, Item 2) on air dryer (Figure 8, Item 1).

END OF TASK

FOLLOW-ON MAINTENANCE

1. Turn MAIN POWER switch on (TM 9-2355-106-10).
2. Start engine and allow air brake system pressure to build to normal range (TM 9-2355-106-10).
3. Remove wheel chocks (TM 9-2355-106-10).
4. Test drive to verify proper brake operation (TM 9-2355-106-10).
5. Set parking brake (TM 9-2355-106-10).
6. Set transmission set in NEUTRAL (N) (TM 9-2355-106-10).
7. Turn engine off (TM 9-2355-106-10).
8. Turn MAIN POWER switch off (TM 9-2355-106-10).

END OF TASK

END OF WORK PACKAGE

FIELD MAINTENANCE

AIR DRYER BRACKET REMOVAL AND INSTALLATION

INITIAL SETUP:

Tools and Special Tools
General Mechanic's Tool Kit (GMTK) (WP 0795, Item 37)
Wrench, torque, 20-100 lb-ft, 3/8-inch drive (WP 0795, Item 141)
Wrench, torque, 50-250 lb-ft, 1/2-inch drive (WP 0795, Item 143)

Materials/Parts
Compound (WP 0794, Item 13)
Faceshield, industrial (WP 0794, Item 16)
Goggles, industrial (WP 0794, Item 20)
Gloves (WP 0794, Item 18)
Grease (WP 0794, Item 22)
Cable lock strap - (6) (WP 0796, Item 120)

References
TM 9-2355-106-10
TM 9-2355-106-23P
WP 0782

Equipment Condition
Parking brake set (TM 9-2355-106-10)
Transmission set in NEUTRAL (N) (TM 9-2355-106-10)
Engine off (TM 9-2355-106-10)
MAIN POWER switch off (TM 9-2355-106-10)
Wheels chocked (TM 9-2355-106-10)
Air pressure drained from all air brake reservoirs (TM 9-2355-106-10)
Air dryer removed (WP 0517)

REMOVAL

NOTE

Note location of cable lock straps prior to removal to aid installation.

1. Remove two nuts (Figure 1, Item 4), flat washers (Figure 1, Item 3), and bolts (Figure 1, Item 1) from air dryer lower mounting bracket (Figure 1, Item 5). Remove lower mounting bracket from air dryer bracket (Figure 1, Item 2).

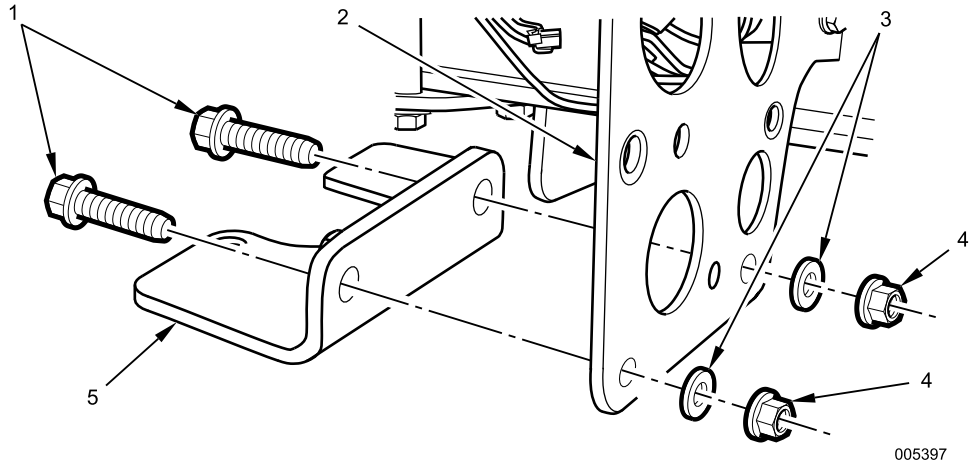

Figure 1. Air Dryer Lower Mounting Bracket.

AIR DRYER BRACKET REMOVAL AND INSTALLATION - (CONTINUED)

2. Remove cable lock strap (Figure 2, Item 2) from air dryer bracket (Figure 2, Item 1). Discard cable lock strap.

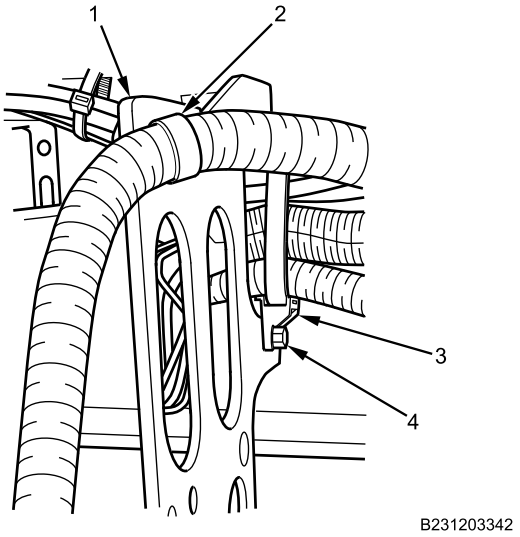

Figure 2. Air Dryer Bracket Harness Retainers.

3. Remove harness bundle tie retainer bolt (Figure 2, Item 4), nut, and harness bundle tie retainer (Figure 2, Item 3) from air dryer bracket (Figure 2, Item 1).
4. Disconnect air line (Figure 3, Item 1) from left rear gladhand fitting (Figure 3, Item 2).

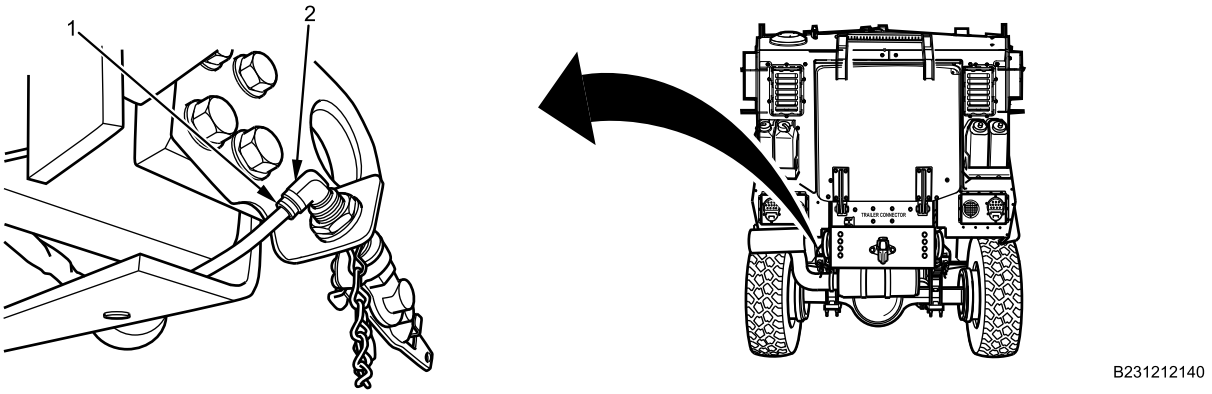

Figure 3. Left Rear Gladhand Air Hose.

AIR DRYER BRACKET REMOVAL AND INSTALLATION - (CONTINUED)

5. Disconnect air line (Figure 4, Item 2) from double check valve quick connect fitting (Figure 4, Item 1).

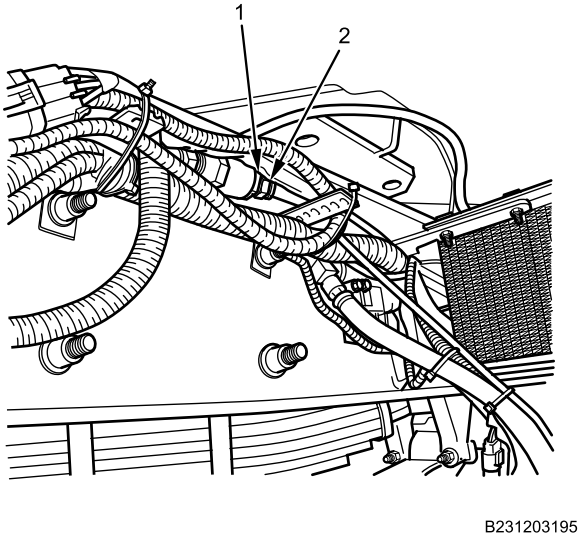

Figure 4. Quick Disconnect Air Hose Rear of Transfer Case Oil Cooler .

6. Disconnect air line (Figure 5, Item 2) from front air brake quick release valve fitting (Figure 5, Item 1).

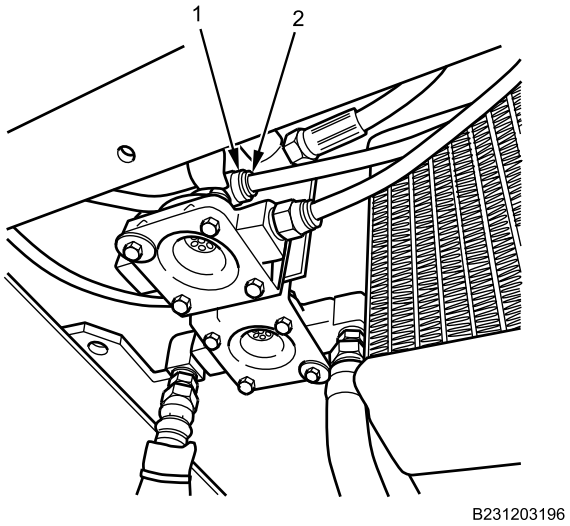

Figure 5. Air Brake Quick Release Valve Air Hose.

AIR DRYER BRACKET REMOVAL AND INSTALLATION - (CONTINUED)

7. Disconnect air line (Figure 6, Item 2) from air brake relay valve fitting (Figure 6, Item 1).

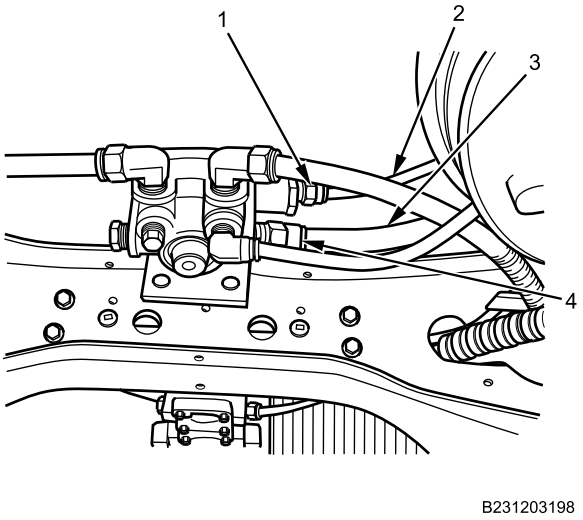

Figure 6. Air Brake Relay Valve Air Hose.

8. Disconnect air line (Figure 6, Item 3) from air brake relay valve fitting (Figure 6, Item 4).
9. Disconnect cooler line (Figure 7, Item 2) from transfer case oil cooler fitting (Figure 7, Item 1).

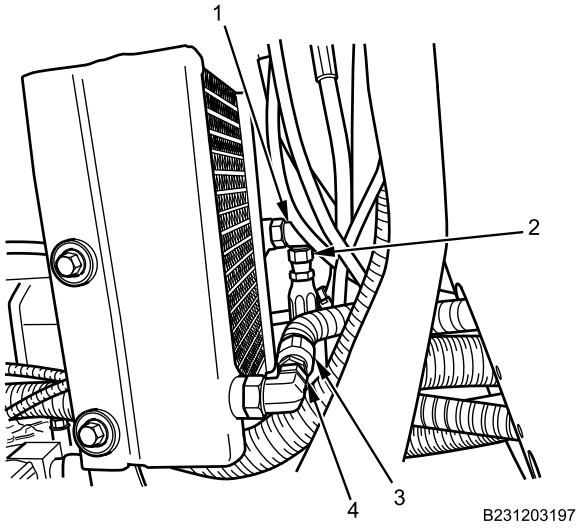

Figure 7. Transfer Case Oil Cooler Lines.

10. Disconnect cooler line (Figure 7, Item 3) from transfer case oil cooler fitting (Figure 7, Item 4).

AIR DRYER BRACKET REMOVAL AND INSTALLATION - (CONTINUED)

11. Unlock connector locking tab (Figure 8, Item 8) and disconnect 12-cavity electrical connector (Figure 8, Item 7) located at air dryer bracket.

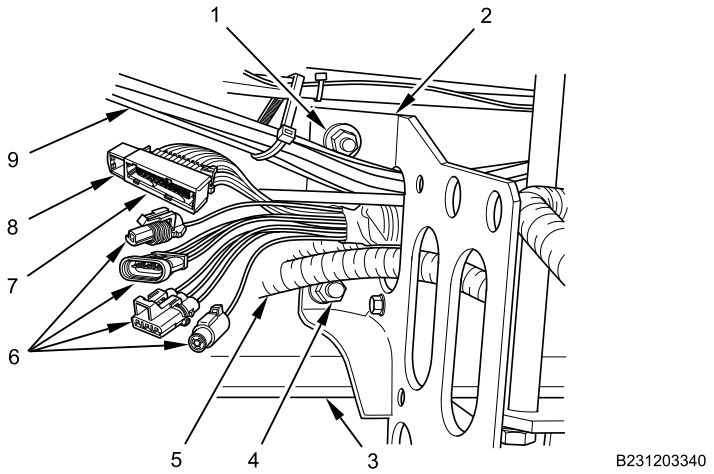

Figure 8. Air Dryer Bracket.

12. Disconnect four electrical connectors (Figure 8, Item 6).
13. Remove wiring harness, air lines (Figure 8, Item 9), and transfer case oil cooler hoses (Figure 8, Item 5) from air dryer bracket (Figure 8, Item 2).
14. Remove nuts (Figure 8, Item 1 and 4), bolts, and air dryer bracket (Figure 8, Item 2) from frame rail (Figure 8, Item 3).

END OF TASK

AIR DRYER BRACKET REMOVAL AND INSTALLATION - (CONTINUED)

INSTALLATION

WARNING

Corrosion preventive compound is toxic. Use only in well-ventilated area. Do not get in eyes; wear chemical safety goggles and full-face shield when using. Avoid contact with skin and wear rubber or plastic, solvent-resistant gloves. In case of contact, remove contaminated clothing and immediately wash area with soap and water. If compound contacts eyes, flush eyes with large amounts of water for at least 15 minutes and get immediate medical attention. If swallowed, do not induce vomiting; contact a physician immediately. Failure to comply may result in serious injury or death to personnel.

1. Apply corrosion preventive compound to air dryer bracket nuts (Figure 9, Item 1 and 4) and bolts.

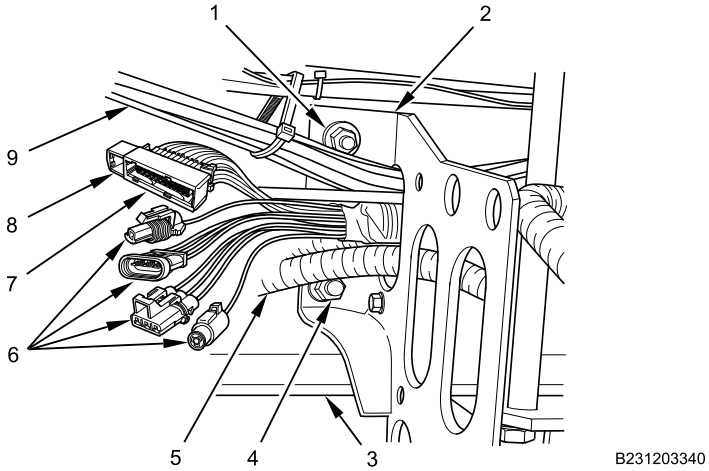

Figure 9. Air Dryer Bracket Frame Nuts and Bolts.

2. Install air dryer bracket (Figure 9, Item 2) on frame rail (Figure 9, Item 3) with two nuts (Figure 9, Item 1 and 4) and bolts and torque to 220 lb-ft (298 N•m).
3. Route transfer case oil cooler lines (Figure 9, Item 5) through air dryer bracket (Figure 9, Item 2).

WARNING

Dielectric grease is harmful to skin and eyes. If grease contacts eyes, rinse thoroughly and contact physician if irritation persists. If skin is contacted, wash thoroughly with soap and water. Failure to comply may result in serious injury to personnel.

4. Apply dielectric grease on five wiring harness connectors (Figure 9, Item 6 and 7).
5. Route five wiring harness connectors (Figure 9, Item 6 and 7) though air dryer bracket (Figure 9, Item 2).
6. Connect four wire harness connectors (Figure 9, Item 6).

AIR DRYER BRACKET REMOVAL AND INSTALLATION - (CONTINUED)

7. Connect 12-cavity electrical connector (Figure 9, Item 7) and slide connector locking tab (Figure 9, Item 8) into locked position.
8. Route air lines (Figure 9, Item 9) through air dryer bracket (Figure 9, Item 2).
9. Apply corrosion preventive compound to bolt (Figure 10, Item 4).

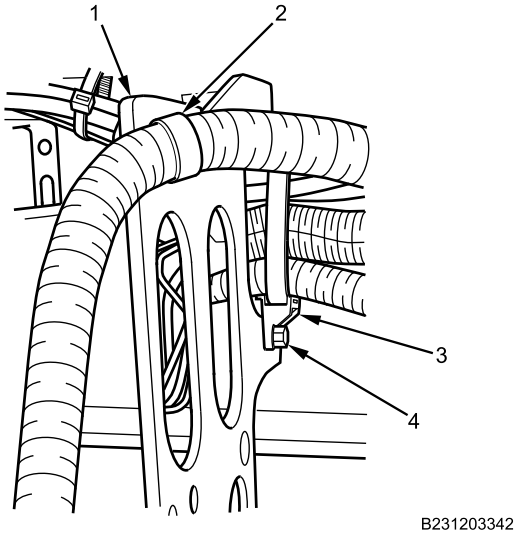

Figure 10. Air Dryer Bracket Harness Retainers.

10. Install harness bundle tie retainer (Figure 10, Item 3) on air dryer bracket (Figure 10, Item 1) with bolt (Figure 10, Item 4) and tighten securely.
11. Secure transfer case oil cooler hose to air dryer bracket (Figure 10, Item 1) with new cable lock strap (Figure 10, Item 2).
12. Apply corrosion preventive compound to nuts (Figure 11, Item 4) and bolts.

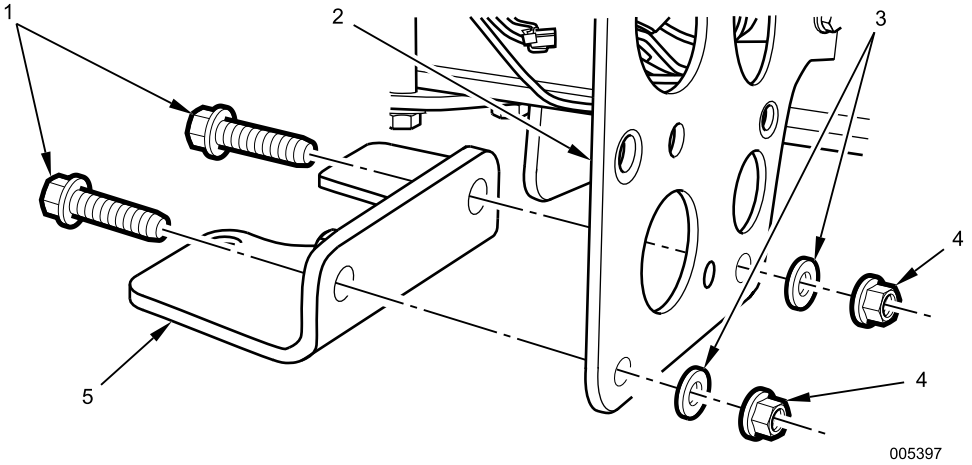

Figure 11. Air Dryer Lower Mounting Bracket.

13. Install air dryer lower mounting bracket (Figure 11, Item 5) on air dryer bracket (Figure 11, Item 2) with two nuts (Figure 11, Item 4), flat washers (Figure 11, Item 3), and bolts (Figure 11, Item 1) and torque to 25 lb-ft (34 N•m).

AIR DRYER BRACKET REMOVAL AND INSTALLATION - (CONTINUED)

14. Connect air line (Figure 12, Item 1) on left gladhand fitting (Figure 12, Item 2).

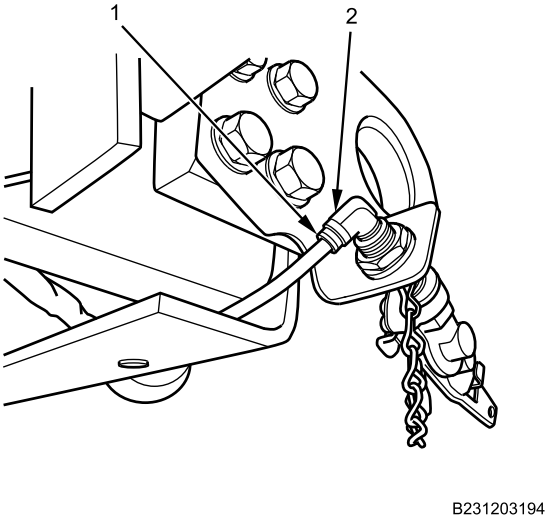

Figure 12. Left Gladhand Air Hose.

15. Connect air line (Figure 13, Item 2) on double check valve quick connect fitting (Figure 13, Item 1).

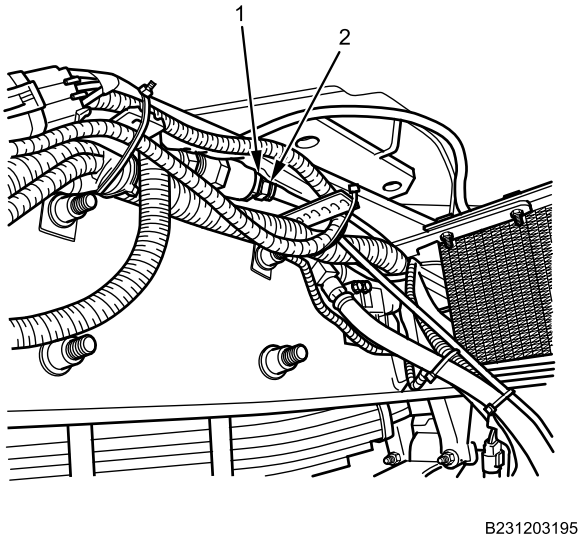

Figure 13. Quick Connect Air Hose Rear of Transfer Case Oil Cooler.

AIR DRYER BRACKET REMOVAL AND INSTALLATION - (CONTINUED)

16. Connect air line (Figure 14, Item 2) on air brake quick release valve fitting (Figure 14, Item 1).

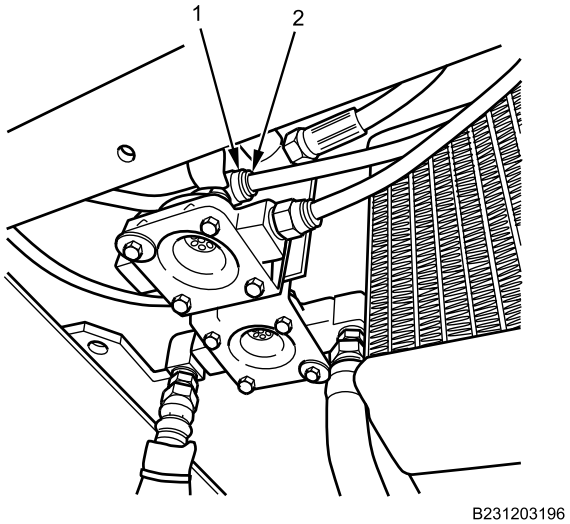

Figure 14. Air Brake Quick Release Valve Air Hose.

17. Connect air line (Figure 15, Item 2) on air brake relay valve fitting (Figure 15, Item 1).

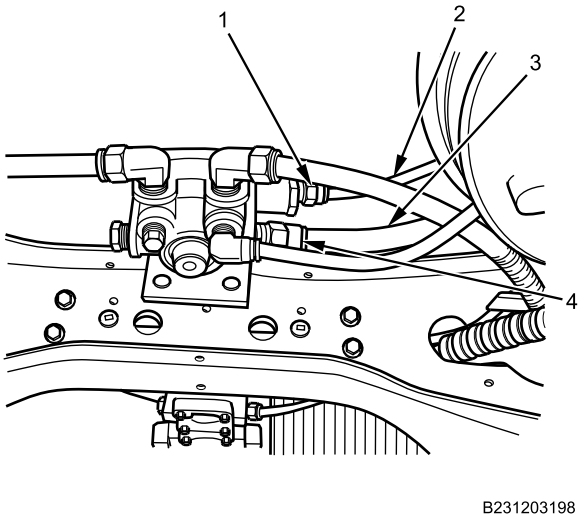

Figure 15. Air Brake Relay Valve Air Hose.

18. Connect air line (Figure 15, Item 3) on air brake relay valve fitting (Figure 15, Item 4).

AIR DRYER BRACKET REMOVAL AND INSTALLATION - (CONTINUED)

19. Connect cooler line (Figure 16, Item 2) on transfer case oil cooler fitting (Figure 16, Item 1).

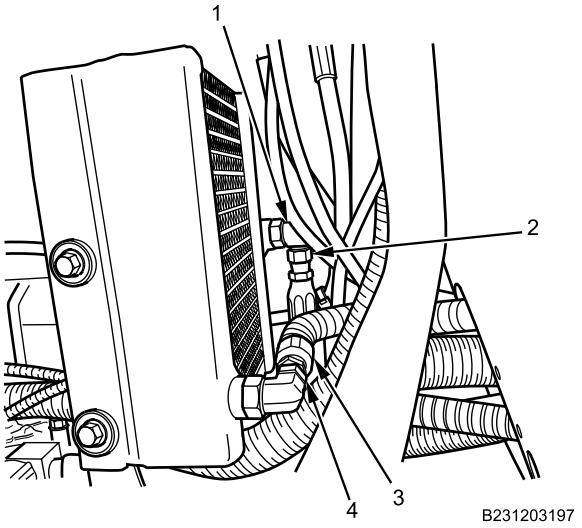

Figure 16. Transfer Case Oil Cooler Lines.

20. Connect cooler line (Figure 16, Item 3) on transfer case oil cooler fitting (Figure 16, Item 4).

END OF TASK

FOLLOW-ON MAINTENANCE

1. Check transfer case fluid level (WP 0466).
2. Install air dryer (WP 0517).
3. Turn MAIN POWER switch on (TM 9-2355-106-10).
4. Start engine and allow air brake system pressure to build to normal range (TM 9-2355-106-10).
5. Remove wheel chocks (TM 9-2355-106-10).
6. Test drive to verify proper brake operation (TM 9-2355-106-10).
7. Set parking brake (TM 9-2355-106-10).
8. Set transmission set in NEUTRAL (N) (TM 9-2355-106-10).
9. Turn engine off (TM 9-2355-106-10).
10. Turn MAIN POWER switch off (TM 9-2355-106-10).

END OF TASK

END OF WORK PACKAGE

FIELD MAINTENANCE

AIR DRYER DESICCANT CARTRIDGE REMOVAL AND INSTALLATION

INITIAL SETUP:

Tools and Special Tools
General Mechanic's Tool Kit (GMTK) (WP 0795, Item 37)
Wrench, torque, 20-100 lb-ft, 3/8-inch drive (WP 0795, Item 141)

Materials/Parts
Goggles, industrial (WP 0794, Item 20)
Cartridge, desiccant (WP 0796, Item 20)

References
TM 9-2355-106-10
TM 9-2355-106-23P
WP 0782

Equipment Condition
Parking brake set (TM 9-2355-106-10)
Transmission set in NEUTRAL (N) (TM 9-2355-106-10)
Engine off (TM 9-2355-106-10)
MAIN POWER switch off (TM 9-2355-106-10)
Wheels chocked (TM 9-2355-106-10)
Air pressure drained from all air brake reservoirs (TM 9-2355-106-10)

REMOVAL

WARNING

Do not operate vehicle with air pressure system loss. Vehicle has reduced or no braking capability and may not stop. Failure to comply may result in damage to equipment and serious injury or death to personnel.

Let air pressure build in both tanks to 100 psi (689 kPa) before releasing the parking brake. Low air pressure may affect vehicle braking capability. Failure to comply may result in injury or death to personnel.

AIR DRYER DESICCANT CARTRIDGE REMOVAL AND INSTALLATION - (CONTINUED)

1. Remove air dryer cartridge bolt (Figure 1, Item 2) from air dryer base (Figure 1, Item 3).

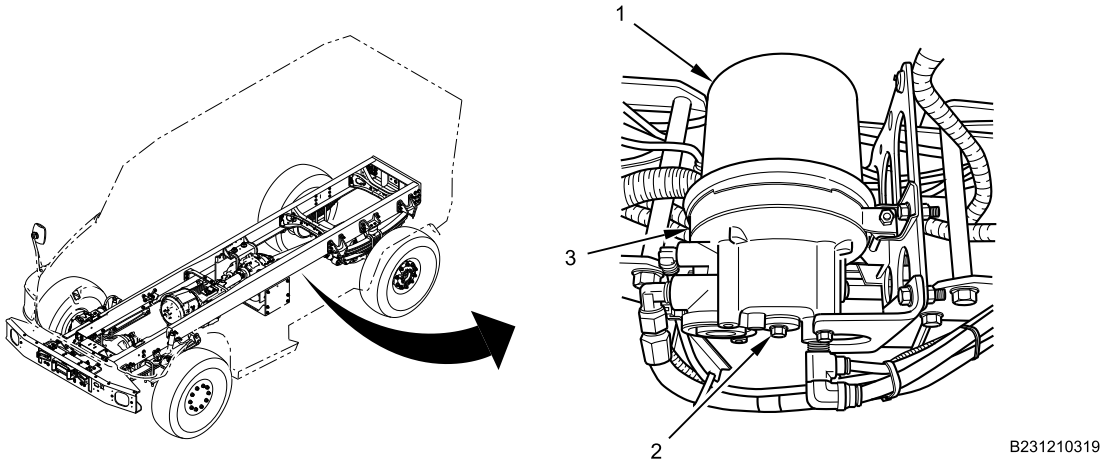

Figure 1. Air Dryer Desiccant Cartridge.

2. Remove air dryer desiccant cartridge (Figure 1, Item 1) from air dryer base (Figure 1, Item 3). Discard air dryer desiccant cartridge.
3. Remove O-rings (Figure 2, Item 2) from air dryer cartridge bolt (Figure 2, Item 1). Discard O-rings.

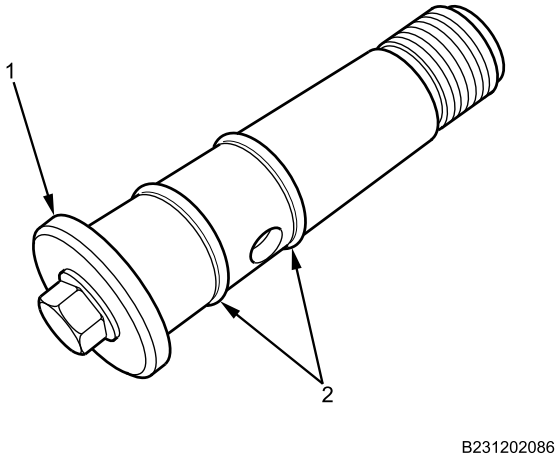

Figure 2. Air Dryer Cartridge Bolt.

END OF TASK

AIR DRYER DESICCANT CARTRIDGE REMOVAL AND INSTALLATION - (CONTINUED)

INSTALLATION

1. Install new O-rings (Figure 3, Item 2) on air dryer cartridge bolt (Figure 3, Item 1).

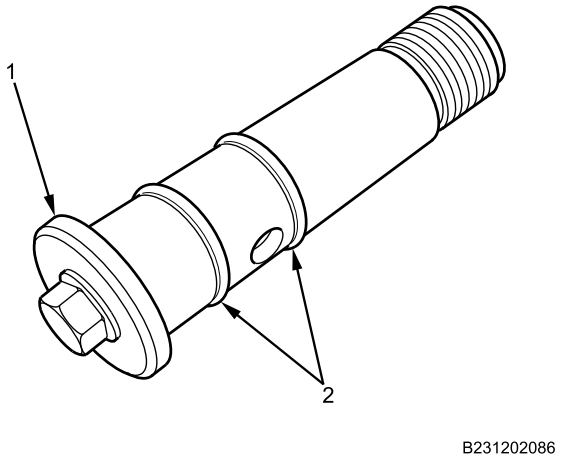

Figure 3. Air Dryer Cartridge Bolt.

NOTE

It may be necessary to rotate cartridge slightly until anti-rotation lugs are properly aligned and allow cartridge to rest flush against end cover of air dryer base.

2. Install new air dryer desiccant cartridge (Figure 4, Item 1) on air dryer base (Figure 4, Item 3).

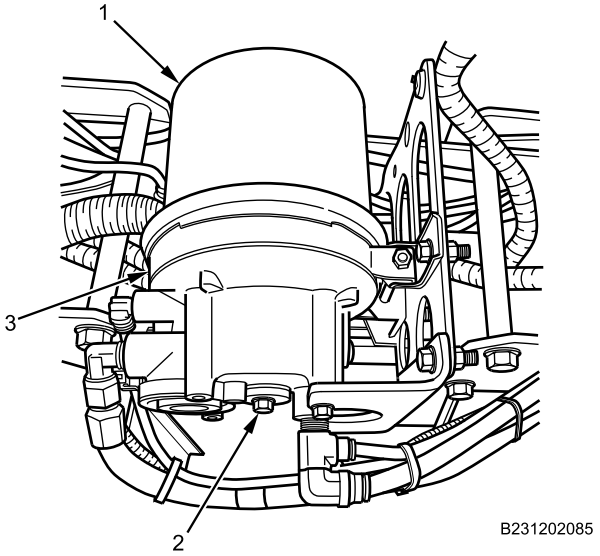

Figure 4. Air Dryer Desiccant Cartridge.

3. Install air dryer cartridge bolt (Figure 4, Item 2) on air dryer base (Figure 4, Item 3) and torque bolt to 65-75 lb-ft (88-102 N•m).

END OF TASK

AIR DRYER DESICCANT CARTRIDGE REMOVAL AND INSTALLATION - (CONTINUED)

FOLLOW-ON MAINTENANCE

1. Turn MAIN POWER switch on (TM 9-2355-106-10).
2. Remove wheel chocks (TM 9-2355-106-10).
3. Test-drive vehicle to verify air dryer and brake system operation.
4. Set transmission in NEUTRAL (N) (TM 9-2355-106-10).
5. Set vehicle parking brake (TM 9-2355-106-10).
6. Turn engine off (TM 9-2355-106-10).
7. Turn MAIN POWER switch off (TM 9-2355-106-10).

END OF TASK

END OF WORK PACKAGE

FIELD MAINTENANCE

PRESSURE PROTECTION VALVE REMOVAL AND INSTALLATION

INITIAL SETUP:

Tools and Special Tools
General Mechanic's Tool Kit, (GMTK) (WP 0795, Item 37)

Materials/Parts
Compound (WP 0794, Item 13)
Faceshield, industrial (WP 0794, Item 16)
Gloves (WP 0794, Item 18)
Goggles, industrial (WP 0794, Item 20)

References
TM 9-2355-106-10
TM 9-2355-106-23P
WP 0782

Equipment Condition
Parking brake set (TM 9-2355-106-10)
Transmission set in NEUTRAL (N) (TM 9-2355-106-10)
Engine off (TM 9-2355-106-10)
MAIN POWER switch off (TM 9-2355-106-10)
Wheels chocked (TM 9-2355-106-10)
Belly armor removed (WP 0606)
Air pressure drained from all air reservoirs (TM 9-2355-106-10)

WARNING

Do not operate vehicle with air pressure system loss. Vehicle has reduced or no braking capability and may not stop. Failure to comply may result in damage to equipment and serious injury or death to personnel.

Let air pressure build in both tanks to 100 psi (689 kPa) before releasing the parking brake. Low air pressure may affect vehicle braking capability. Failure to comply may result in injury or death to personnel.

PRESSURE PROTECTION VALVE REMOVAL AND INSTALLATION - (CONTINUED)

REMOVAL

NOTE

The following steps are performed under vehicle along left inboard frame rail near fuel tank.

1. Disconnect air line (Figure 1, Item 1) from pressure protection valve fitting (Figure 1, Item 7).

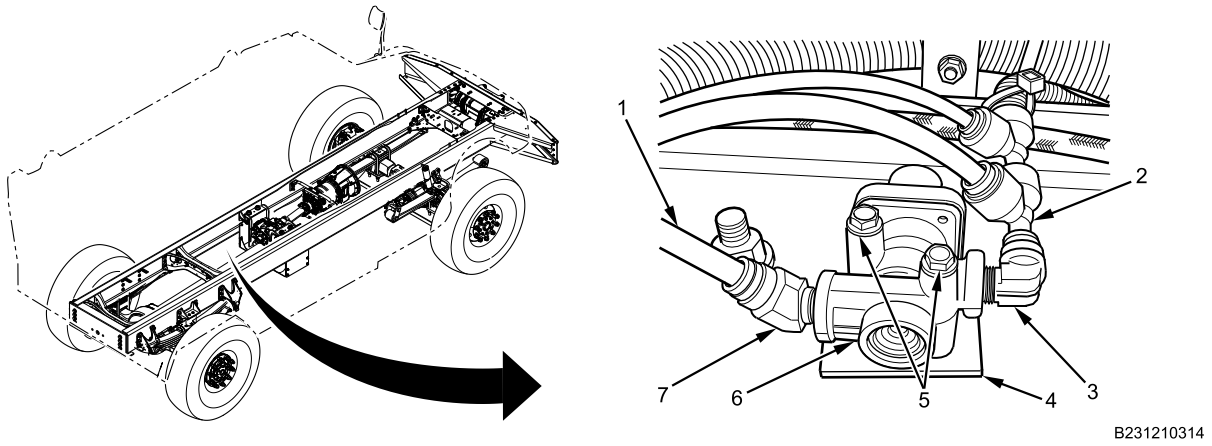

Figure 1. Pressure Protection Valve.

2. Disconnect air line manifold (Figure 1, Item 2) from pressure protection valve fitting (Figure 1, Item 3).
3. Remove pressure protection valve fittings (Figure 1, Item 3 and 7) from pressure protection valve (Figure 1, Item 6).
4. Remove pressure protection valve mounting bolts (Figure 1, Item 5) from pressure protection valve (Figure 1, Item 6) and bracket (Figure 1, Item 4) and remove valve.

END OF TASK

PRESSURE PROTECTION VALVE REMOVAL AND INSTALLATION - (CONTINUED)

INSTALLATION

WARNING

Corrosion preventive compound is toxic. Use only in well-ventilated area. Do not get in eyes; wear chemical safety goggles and full-face shield when using. Avoid contact with skin and wear rubber or plastic, solvent-resistant gloves. In case of contact, remove contaminated clothing and immediately wash area with soap and water. If compound contacts eyes, flush eyes with large amounts of water for at least 15 minutes and get immediate medical attention. If swallowed, do not induce vomiting; contact a physician immediately. Failure to comply may result in serious injury or death to personnel.

1. Apply corrosion preventive compound to mounting bolts (Figure 2, Item 5).

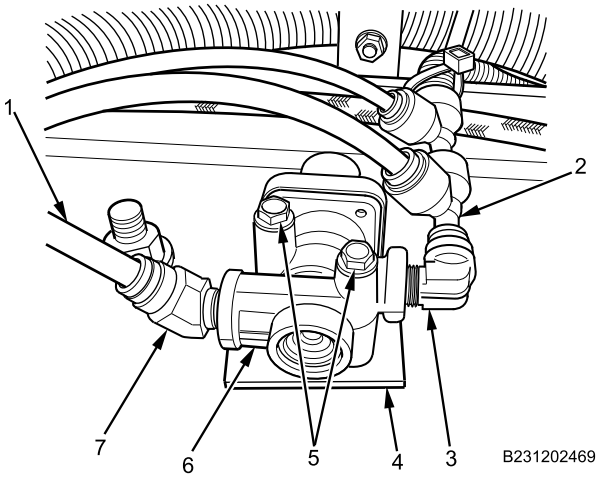

Figure 2. Pressure Protection Valve.

2. Position valve (Figure 2, Item 6) on bracket (Figure 2, Item 4), install mounting bolts (Figure 2, Item 5), and tighten securely.
3. Install fittings (Figure 2, Item 3 and 7) on valve (Figure 2, Item 6) and tighten securely.
4. Connect air line manifold (Figure 2, Item 2) on fitting (Figure 2, Item 3).
5. Connect air line (Figure 2, Item 1) on fitting (Figure 2, Item 7).

END OF TASK

PRESSURE PROTECTION VALVE REMOVAL AND INSTALLATION - (CONTINUED)

FOLLOW-ON MAINTENANCE

1. Turn MAIN POWER switch on (TM 9-2355-106-10).
2. Start engine and allow air brake system pressure to build to normal range (TM 9-2355-106-10).
3. Check for leaks (TM 9-2355-106-10).
4. Remove wheel chocks (TM 9-2355-106-10).
5. Test-drive vehicle to verify brake operation.
6. Set transmission in NEUTRAL (N) (TM 9-2355-106-10).
7. Set vehicle parking brake (TM 9-2355-106-10).
8. Turn engine off (TM 9-2355-106-10).
9. Turn MAIN POWER switch off (TM 9-2355-106-10).
10. Chock wheels (TM 9-2355-106-10).
11. Install belly armor (WP 0606).
12. Remove wheel chocks (TM 9-2355-106-10).

END OF TASK

END OF WORK PACKAGE

FIELD MAINTENANCE

AIR BRAKE QUICK RELEASE VALVES REMOVAL AND INSTALLATION

INITIAL SETUP:

Tools and Special Tools
General Mechanic's Tool Kit (GMTK) (WP 0795, Item 37)

Materials/Parts
Gloves (WP 0794, Item 18)

References
TM 9-2355-106-10
TM 9-2355-106-23P
WP 0786
WP 0782

Equipment Condition
Parking brake set (TM 9-2355-106-10)
Transmission set in NEUTRAL (N) (TM 9-2355-106-10)
Engine shut off (TM 9-2355-106-10)
MAIN POWER switch off (TM 9-2355-106-10)
Wheels chocked (TM 9-2355-106-10)
Air pressure drained from all air brake reservoirs (TM 9-2355-106-10)

REMOVAL

WARNING

Before working on air brake system or any auxiliary pressurized system, make sure air pressure has been drained from all reservoirs. Failure to comply may result in serious injury or death to personnel.

Air drain valves are under pressure. Wear protective goggles and do not place face in front of air drain valves while draining air reservoirs. Open air drain valves slowly to release air pressure gradually. Failure to comply may result in serious injury or death to personnel.

Do not disconnect any air line or fitting until system pressure has been relieved. Hoses may whip and injure personnel, and air under pressure can penetrate skin. Failure to comply may result in serious injury or death to personnel.

Do not operate vehicle with air pressure system loss. Vehicle has reduced or no braking capability and may not stop. Failure to comply may result in damage to equipment and serious injury or death to personnel.

Let air pressure build in both tanks to 100 psi (689 kPa) before releasing the parking brake. Low air pressure may affect vehicle braking capability. Failure to comply may result in injury or death to personnel.

AIR BRAKE QUICK RELEASE VALVES REMOVAL AND INSTALLATION - (CONTINUED)

NOTE

Air brake quick release valves are located behind frame crossmember near rear axle assembly.

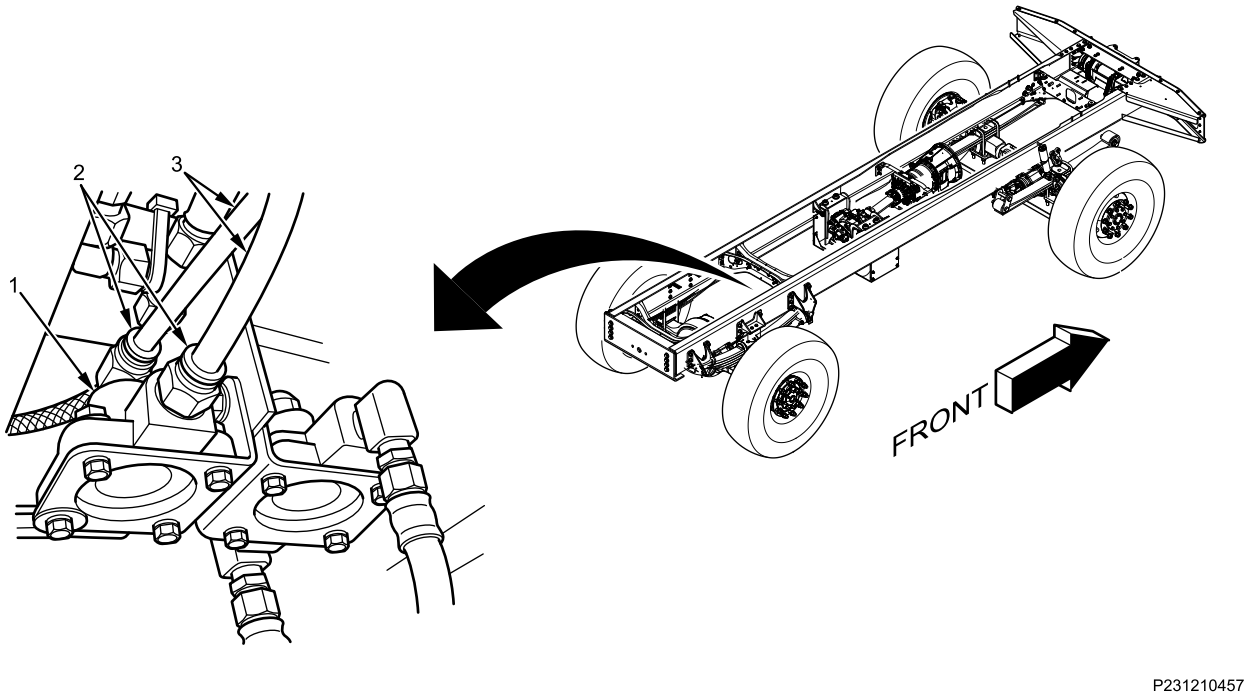

Figure 1. Front Air Brake Quick Release Valve.

1. Disengage two quick connect fittings (Figure 1, Item 2) and remove two air lines (Figure 1, Item 3) from front air brake quick release valve (Figure 1, Item 1).

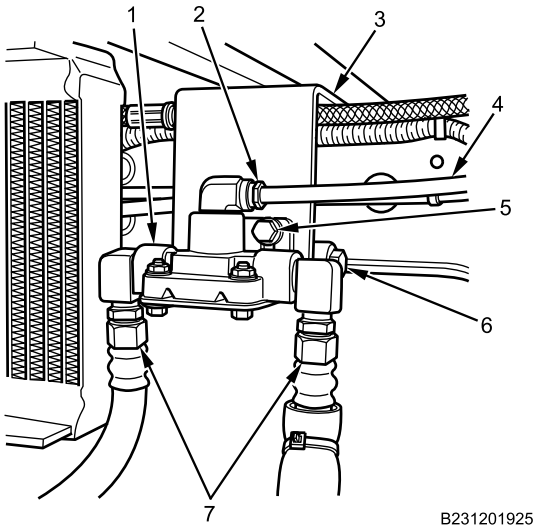

Figure 2. Rear Air Brake Quick Release Valve.

2. Remove two air lines (Figure 2, Item 7) from rear air brake quick release valve (Figure 2, Item 1).
3. Disengage quick connect fitting (Figure 2, Item 2) and remove air line (Figure 2, Item 4) from rear air brake quick release valve (Figure 2, Item 1).

AIR BRAKE QUICK RELEASE VALVES REMOVAL AND INSTALLATION - (CONTINUED)

4. Remove two bolts (Figure 2, Item 5) and nuts from air brake valve mounting bracket (Figure 2, Item 3). Right bolt shown, left bolt hidden from view.
5. Remove front and rear air brake quick release valves (Figure 2, Item 1 and 6) from air brake valve mounting bracket (Figure 2, Item 3).

END OF TASK

INSTALLATION

WARNING

Ensure air lines and air line fittings are clean and not damaged. Ensure air lines are fully engaged in quick connect fittings. Loose or leaking connections could degrade braking system performance or cause brakes to fail completely. Failure to comply may result in damage to equipment and serious injury or death to personnel.

1. Install front and rear air brake quick release valves (Figure , Item 1 and 6) on air brake valve mounting bracket (Figure , Item 3) with two bolts (Figure , Item 5) and nuts and tighten securely. Right bolt shown, left bolt hidden from view.
2. Install air line (Figure , Item 4) in quick connect fitting (Figure , Item 2).
3. Install two air lines (Figure , Item 7) on rear air brake quick release valve (Figure , Item 1).

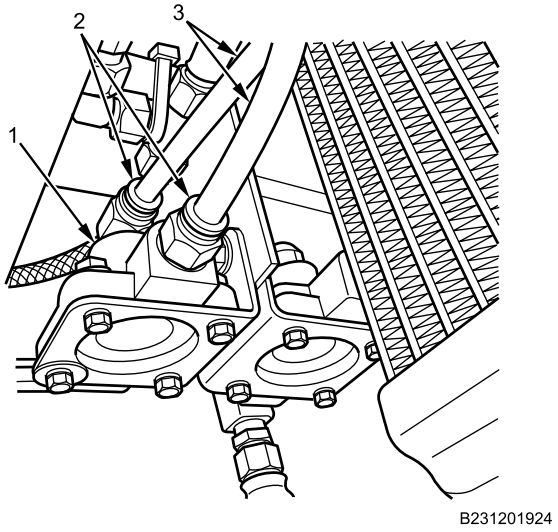

Figure 3. Front Air Brake Quick Release Valve.

4. Install two air lines (Figure 3, Item 3) in quick connect fittings (Figure 3, Item 2) on front air brake quick release valve (Figure 3, Item 1). Ensure air lines are fully inserted and cannot be pulled free from fittings.

END OF TASK

AIR BRAKE QUICK RELEASE VALVES REMOVAL AND INSTALLATION - (CONTINUED)

FOLLOW-ON MAINTENANCE

1. Close air valves on air brake reservoirs (TM 9-2355-106-10).
2. Turn MAIN POWER switch on (TM 9-2355-106-10).
3. Start engine (TM 9-2355-106-10).
4. Observe instrument panel gauges to verify proper air pressure (TM 9-2355-106-10).
5. Inspect front and rear air brake quick release valve air line connections for leaks.
6. Turn engine off (TM 9-2355-106-10).
7. Turn MAIN POWER switch off (TM 9-2355-106-10).
8. Remove wheel chocks (TM 9-2355-106-10).

END OF TASK

END OF WORK PACKAGE

FIELD MAINTENANCE

AIR BRAKE DOUBLE CHECK VALVE REMOVAL AND INSTALLATION

INITIAL SETUP:

Tools and Special Tools
General Mechanic's Tool Kit (GMTK) (WP 0795, Item 37)

Materials/Parts
Goggles, industrial (WP 0794, Item 20)
Sealing compound (WP 0794, Item 44)
Gloves (WP 0794, Item 18)

References
TM 9-2355-106-10
TM 9-2355-106-23P
WP 0782

Equipment Condition
Parking brake set (TM 9-2355-106-10)
Transmission set in NEUTRAL (N) (TM 9-2355-106-10)
Engine shut off (TM 9-2355-106-10)
MAIN POWER switch off (TM 9-2355-106-10)
Wheels chocked (TM 9-2355-106-10)
Air pressure drained from all air brake reservoirs (TM 9-2355-106-10)
Belly armor removed (WP 0606)
Starter motor removed (WP 0292)

WARNING

Before working on air brake system or any auxiliary pressurized system, make sure air pressure has been drained from all reservoirs. Failure to comply may result in serious injury or death to personnel.

Air drain valves are under pressure. Wear protective goggles and do not place face in front of air drain valves while draining air reservoirs. Open air drain valves slowly to release air pressure gradually. Failure to comply may result in serious injury or death to personnel.

Do not disconnect any air line or fitting until system pressure has been relieved. Hoses may whip and injure personnel, and air under pressure can penetrate skin. Failure to comply may result in serious injury or death to personnel.

Do not operate vehicle with air pressure system loss. Vehicle has reduced or no braking capabiLet air pressure build in both tanks to 100 psi (689 kPa) before releasing the parking brake. Low air pressure may affect vehicle braking capability. Failure to comply may result in injury or death to personnel.lity and may not stop. Failure to comply may result in damage to equipment and serious injury or death to personnel.

NOTE

Note position and routing of each air line before removal to aid in proper installation.

Vehicle contains two air brake double check valves. Both are located on left inner frame rail-one near engine starter motor, one near air dryer assembly. Air brake double check valve near starter motor shown; other valve similar.

AIR BRAKE DOUBLE CHECK VALVE REMOVAL AND INSTALLATION - (CONTINUED)

REMOVAL

1. Disengage three quick connect fittings (Figure 1, Item 1) and remove three air lines (Figure 1, Item 2) from air brake double check valve (Figure 1, Item 4).

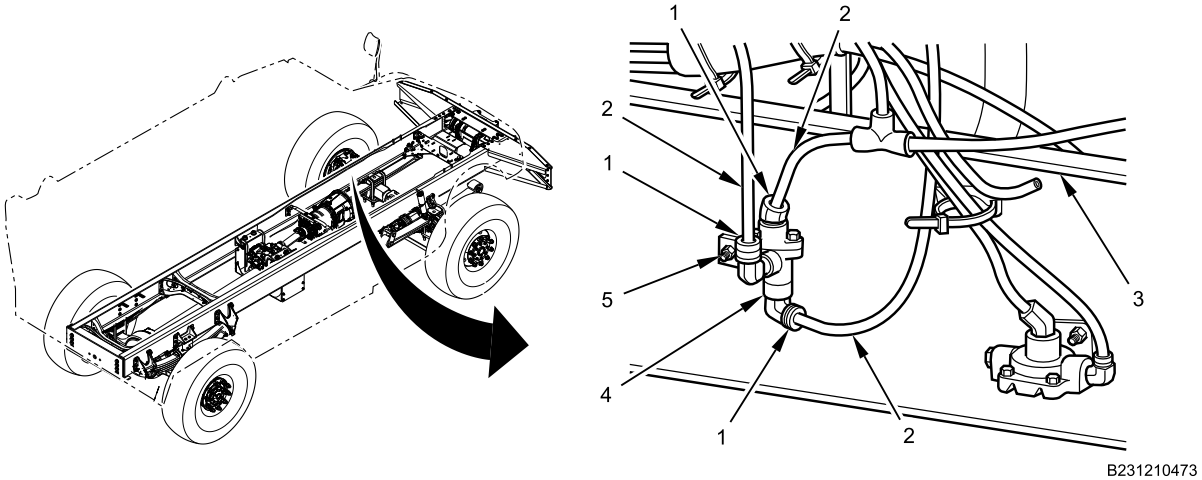

Figure 1. Air Brake Double Check Valve.

2. Remove nut (Figure 1, Item 5) and bolt from air brake double check valve (Figure 1, Item 4).
3. Remove air brake double check valve (Figure 1, Item 4) from left frame rail (Figure 1, Item 3).

END OF TASK

DISASSEMBLY

1. Remove three fittings (Figure 2, Item 2) from double check valve (Figure 2, Item 1).

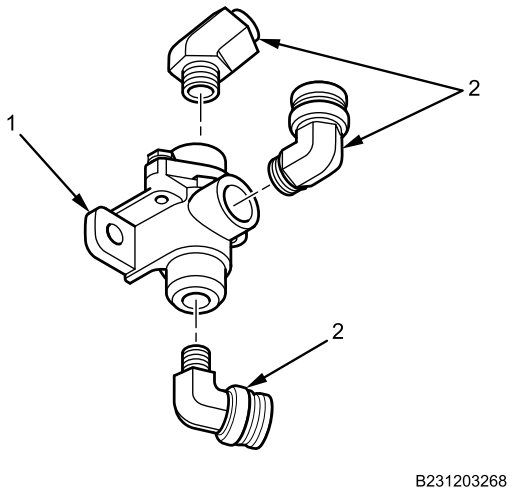

Figure 2. Air Brake Double Check Valve.

END OF TASK

AIR BRAKE DOUBLE CHECK VALVE REMOVAL AND INSTALLATION - (CONTINUED)

ASSEMBLY

WARNING

Thread sealing compound is harmful to skin and eyes. If thread sealing compound contacts eyes, rinse thoroughly and contact physician if irritation persists. If skin is contacted, wash thoroughly with soap and water. Failure to comply may result in serious injury to personnel.

1. Apply thread sealing compound on three fitting threads.

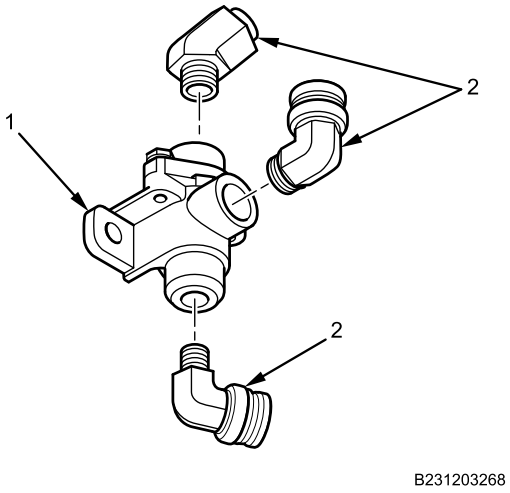

Figure 3. Air Brake Double Check Valve.

2. Install three fittings (Figure 3, Item 2) on double check valve (Figure 3, Item 1) and tighten securely.

END OF TASK

AIR BRAKE DOUBLE CHECK VALVE REMOVAL AND INSTALLATION - (CONTINUED)

INSTALLATION

1. Install air brake double check valve (Figure 4, Item 4) on left frame rail (Figure 4, Item 3) with nut (Figure 4, Item 5) and bolt and tighten securely.

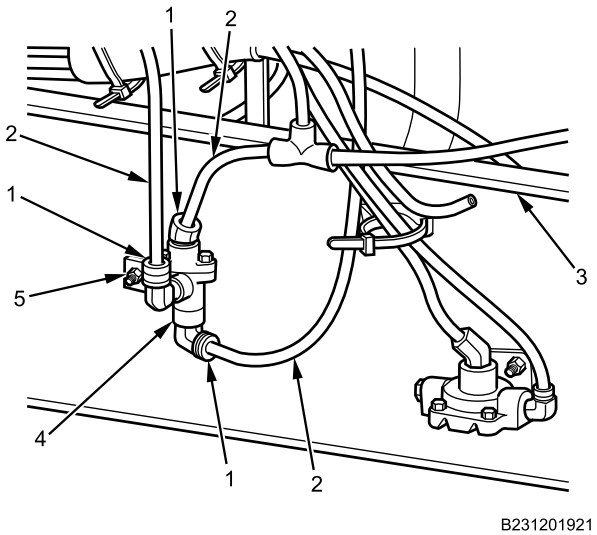

Figure 4. Air Brake Double Check Valve.

WARNING

Ensure air lines and air line fittings are clean and are not damaged. Loose or leaking connections could degrade braking system performance or cause brakes to fail completely. Failure to comply may result in damage to equipment and serious injury or death to personnel.

Ensure air lines are installed in correct quick connect fittings as noted during removal. Incorrect air line connections could degrade braking system performance or cause brakes to fail completely. Failure to comply may result in damage to equipment and serious injury or death to personnel.

Ensure air lines are fully inserted and cannot be pulled free from quick connect fittings. Loose or leaking connections could degrade braking system performance or cause brakes to fail completely. Failure to comply may result in damage to equipment and serious injury or death to personnel.

2. Install three air lines (Figure 4, Item 2) in quick connect fittings (Figure 4, Item 1) on air brake double check valve (Figure 4, Item 4).

END OF TASK

FOLLOW-ON MAINTENANCE

1. Install starter motor (WP 0292).
2. Turn MAIN POWER switch on (TM 9-2355-106-10).
3. Start engine (TM 9-2355-106-10).
4. Observe instrument panel gauges to verify proper air pressure (TM 9-2355-106-10).
5. Inspect air brake double check valve air line connections for leaks (TM 9-2355-106-10).
6. Test drive vehicle to verify proper air brake operation (TM 9-2355-106-10).
7. Turn engine off (TM 9-2355-106-10).
8. Turn MAIN POWER switch off (TM 9-2355-106-10).

AIR BRAKE DOUBLE CHECK VALVE REMOVAL AND INSTALLATION - (CONTINUED)

9. Install belly armor (WP 0606).
10. Remove wheel chocks (TM 9-2355-106-10).

END OF TASK

END OF WORK PACKAGE

FIELD MAINTENANCE

AIR COMPRESSOR SUPPLY AIR LINE REMOVAL AND INSTALLATION

INITIAL SETUP:

Tools and Special Tools
General Mechanic's Tool Kit (GMTK) (WP 0795, Item 37)

References
TM 9-2355-106-10
TM 9-2355-106-23P
WP 0782

Equipment Condition
Parking brake set (TM 9-2355-106-10)
Transmission set in NEUTRAL (N) (TM 9-2355-106-10)
Engine shut off (TM 9-2355-106-10)
MAIN POWER switch off (TM 9-2355-106-10)
Wheels chocked (TM 9-2355-106-10)
Engine hood open and secured (TM 9-2355-106-10)

WARNING

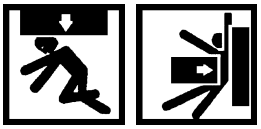

Engine hood is extremely heavy and requires two-person lift. Ensure that there is adequate space in front of the vehicle to open hood completely without pinning or pinching personnel between hood and any other structure. Use extreme care when working under hood and make sure it is properly supported. Failure to comply may result in serious injury or death to personnel.

REMOVAL

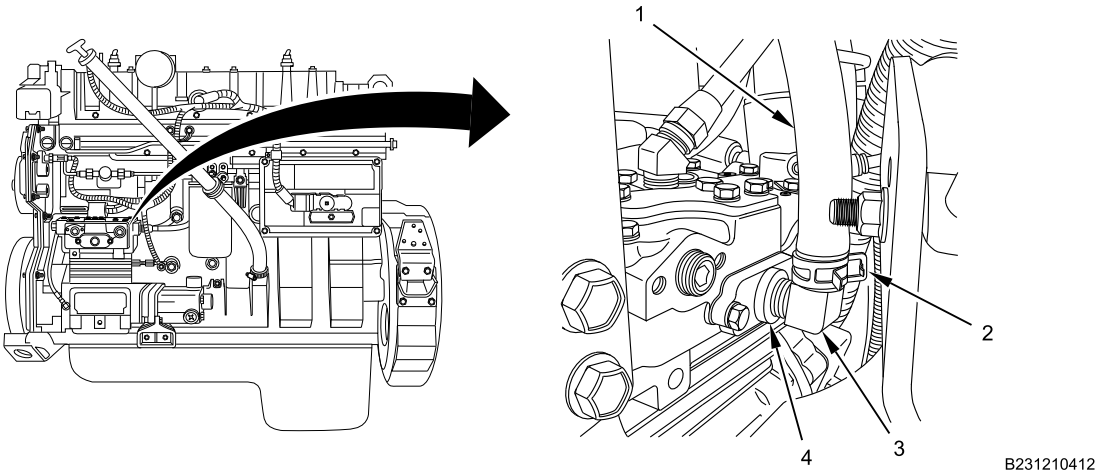

Figure 1. Air Compressor Connection.

1. Loosen clamp (Figure 1, Item 2) and remove air compressor supply air line (Figure 1, Item 1) from fitting (Figure 1, Item 3) on air compressor (Figure 1, Item 4).

AIR COMPRESSOR SUPPLY AIR LINE REMOVAL AND INSTALLATION - (CONTINUED)

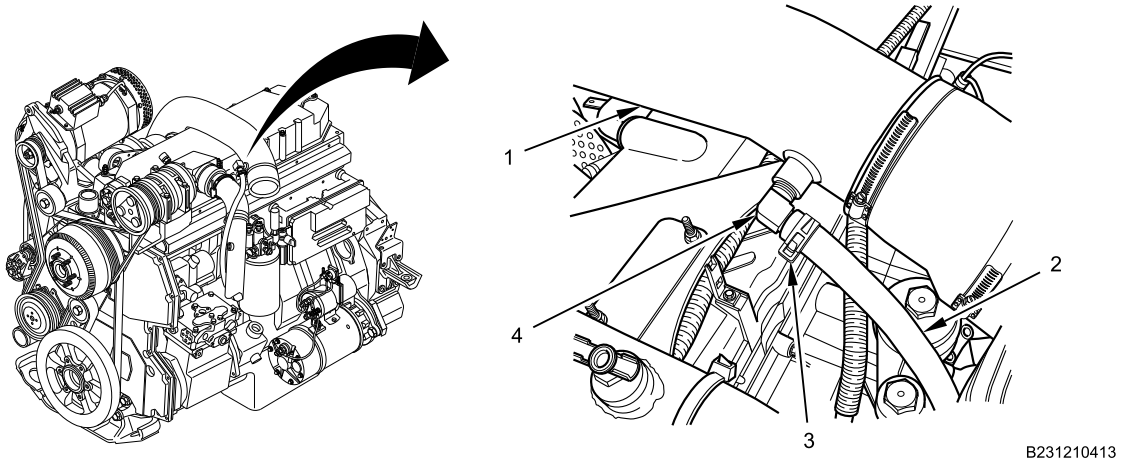

Figure 2. Air Intake Tube Connection.

2. Loosen clamp (Figure 2, Item 3) and remove air compressor supply air line (Figure 2, Item 2) from fitting (Figure 2, Item 4) on air intake tube (Figure 2, Item 1).

END OF TASK

INSTALLATION

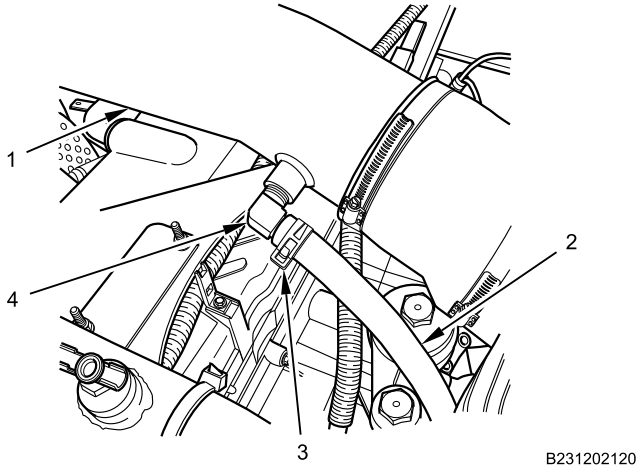

Figure 3. Air Intake Tube Connection.

1. Position clamp (Figure 3, Item 3) on air compressor supply air line (Figure 3, Item 2) .
2. Connect air compressor supply air line (Figure 3, Item 2) at fitting (Figure 3, Item 4) on air intake tube (Figure 3, Item 1).
3. Install clamp (Figure 3, Item 3) where air compressor supply line (Figure 3, Item 2) overlaps fitting (Figure 3, Item 4).

AIR COMPRESSOR SUPPLY AIR LINE REMOVAL AND INSTALLATION - (CONTINUED)

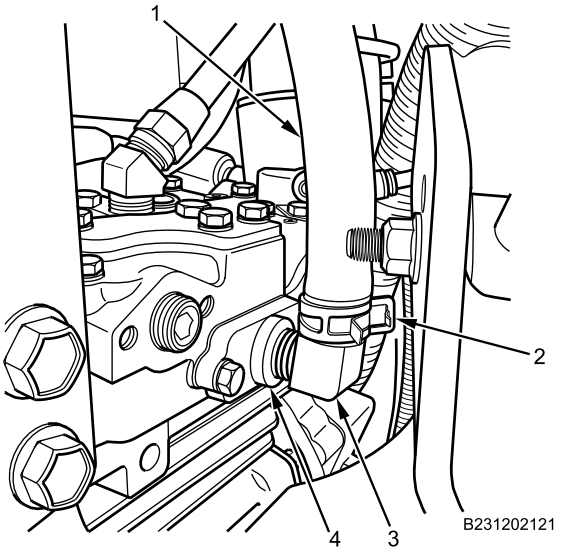

Figure 4. Air Compressor Connection.

4. Position clamp (Figure 4, Item 1) on air compressor supply air line (Figure 4, Item 2) .
5. Connect air compressor supply air line (Figure 4, Item 1) to fitting (Figure 4, Item 3) on air compressor (Figure 4, Item 4).
6. Install clamp (Figure 4, Item 2) where air compressor supply air line (Figure 4, Item 1) overlaps fitting (Figure 4, Item 3).

END OF TASK

FOLLOW-ON MAINTENANCE

1. Close and secure engine hood (TM 9-2355-106-10).
2. Turn MAIN POWER switch on (TM 9-2355-106-10).
3. Remove wheel chocks (TM 9-2355-106-10).
4. Test-drive vehicle to verify brake system operation (TM 9-2355-106-10).
5. Set vehicle parking brake (TM 9-2355-106-10).
6. Set transmission in NEUTRAL (N) (TM 9-2355-106-10).
7. Turn engine off (TM 9-2355-106-10).
8. Turn MAIN POWER switch off (TM 9-2355-106-10).

END OF TASK

END OF WORK PACKAGE

FIELD MAINTENANCE

AIR COMPRESSOR DELIVERY AIR LINE REMOVAL AND INSTALLATION

INITIAL SETUP:

Tools and Special Tools
General Mechanic's Tool Kit (GMTK) (WP 0795, Item 37)
Flaring and Cutting Kit (WP 0795, Item 33)
Bender set, tube, hand actuated, 5/8-inch (WP 0795, Item 17)
Vise, machinist's, 4-inch (WP 0795, Item 128)

Materials/Parts
Cable lock strap - (6) (WP 0796, Item 124)
Cable lock strap - (2) (WP 0796, Item 136)
Compound (WP 0794, Item 13)
Faceshield, industrial (WP 0794, Item 16)
Gloves (WP 0794, Item 18)
Goggles, industrial (WP 0794, Item 20)
Tape (WP 0794, Item 50)

References
TM 9-2355-106-10
TM 9-2355-106-23P
WP 0786
WP 0782

Equipment Condition
Parking brake set (TM 9-2355-106-10)
Transmission set in NEUTRAL (N) (TM 9-2355-106-10)
Engine off (TM 9-2355-106-10)
MAIN POWER switch off (TM 9-2355-106-10)
Wheels chocked (TM 9-2355-106-10)
Engine hood open and secure (TM 9-2355-106-10)
Air pressure drained from all air brake reservoirs (TM 9-2355-106-10)
Belly armor removed (WP 0606)
Left engine armor plate bracket removed (WP 0598)
Left charge air cooler pipe removed (WP 0264)

WARNING

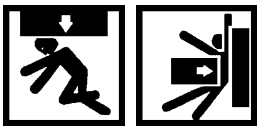

Engine hood is extremely heavy and requires two-person lift. Ensure that there is adequate space in front of the vehicle to open hood completely without pinning or pinching personnel between hood and any other structure. Use extreme care when working under hood and make sure it is properly supported. Failure to comply may result in serious injury or death to personnel.

NOTE

Remove cable lock straps as necessary to perform procedure. Note position and size of cable lock straps to aid in installation.

AIR COMPRESSOR DELIVERY AIR LINE REMOVAL AND INSTALLATION - (CONTINUED)

REMOVAL

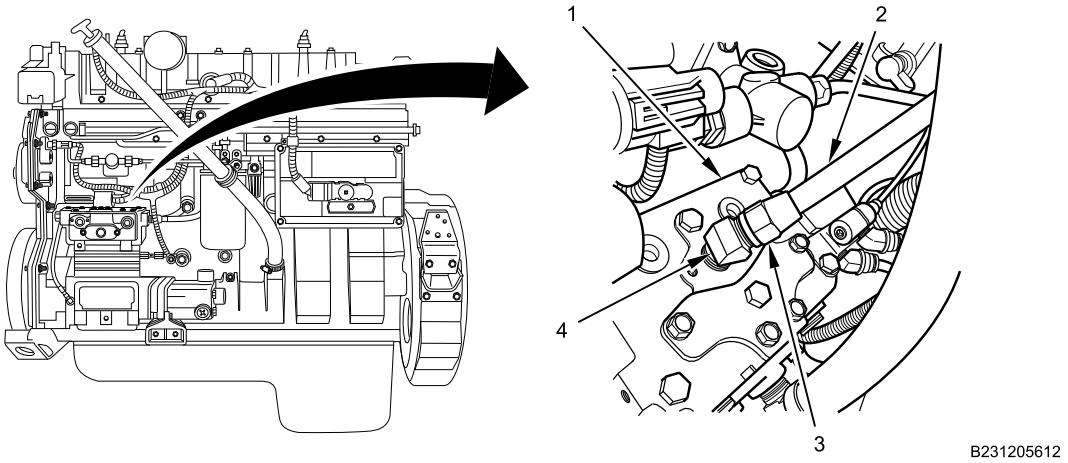

Figure 1. Air Compressor Connection.

1. Remove compression nut (Figure 1, Item 3) and air compressor delivery air line pipe (Figure 1, Item 2) from angle fitting (Figure 1, Item 4).
2. Remove angle fitting (Figure 1, Item 4) from air compressor (Figure 1, Item 1).

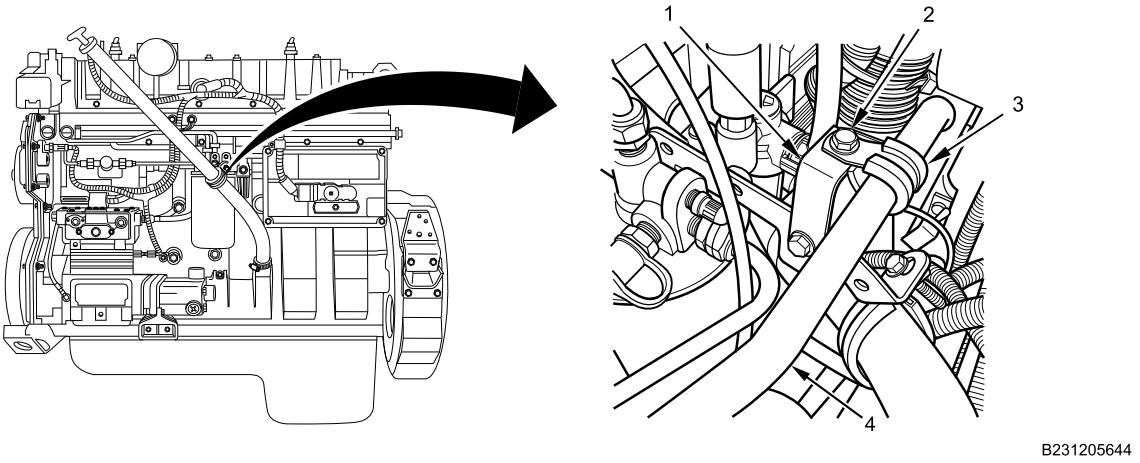

Figure 2. Air Compressor Delivery Air Line Bracket Clamp.

3. Remove pipe clamp bolt (Figure 2, Item 2), nut (not shown), and clamp (Figure 2, Item 3) from support bracket (Figure 2, Item 1).
4. Remove pipe clamp (Figure 2, Item 3) from air compressor delivery air line pipe (Figure 2, Item 4).

AIR COMPRESSOR DELIVERY AIR LINE REMOVAL AND INSTALLATION - (CONTINUED)

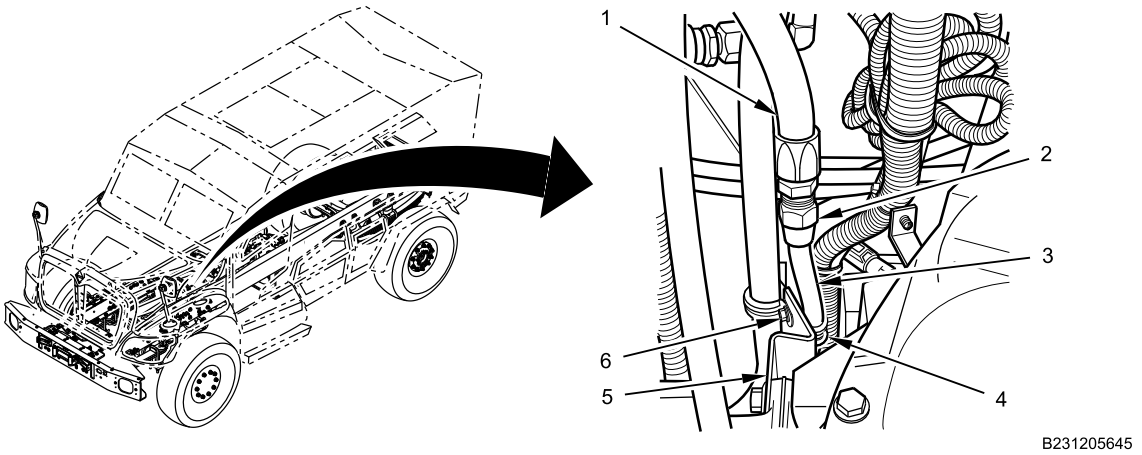

Figure 3. Air Line Pipe and Hose Connection.

NOTE

The following steps are performed under vehicle along left inboard frame rail.

5. Remove compression nut (Figure 3, Item 2) on air compressor delivery air line pipe (Figure 3, Item 3) from fitting on air compressor delivery air line hose (Figure 3, Item 1).
6. Remove pipe clamp bolt (Figure 3, Item 6), nut (not shown), and clamp (Figure 3, Item 4) from support bracket (Figure 3, Item 5) on engine block.
7. Remove pipe clamp (Figure 3, Item 4) from air compressor delivery air line pipe (Figure 3, Item 3).
8. Remove air compressor delivery air line pipe (Figure 3, Item 3) from vehicle.

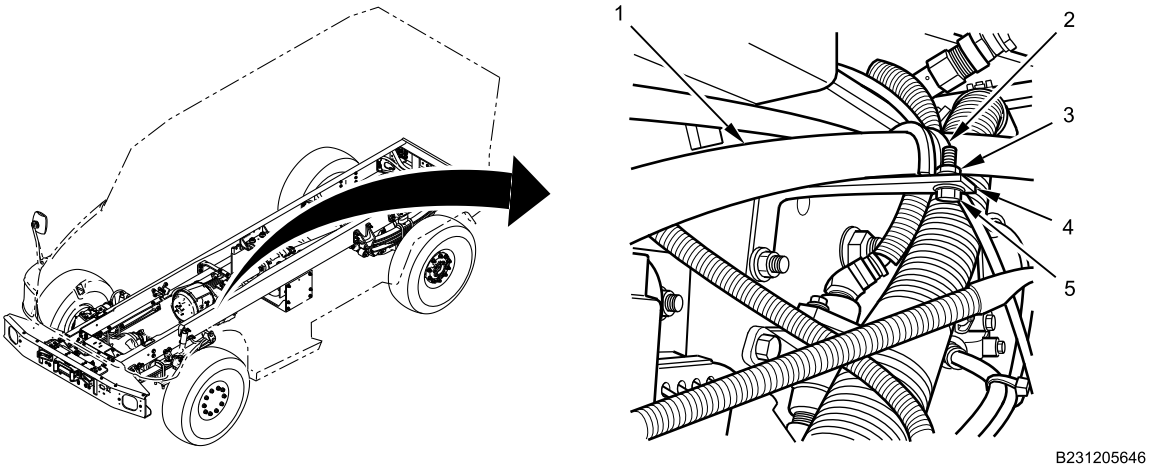

Figure 4. Air Line Hose Support Bracket.

9. Remove nut (Figure 4, Item 3) and bolt (Figure 4, Item 5) securing hose clamp (Figure 4, Item 2) to bracket (Figure 4, Item 4) located near transmission.
10. Remove hose clamp (Figure 4, Item 2) from air compressor delivery air line hose (Figure 4, Item 1).

AIR COMPRESSOR DELIVERY AIR LINE REMOVAL AND INSTALLATION - (CONTINUED)

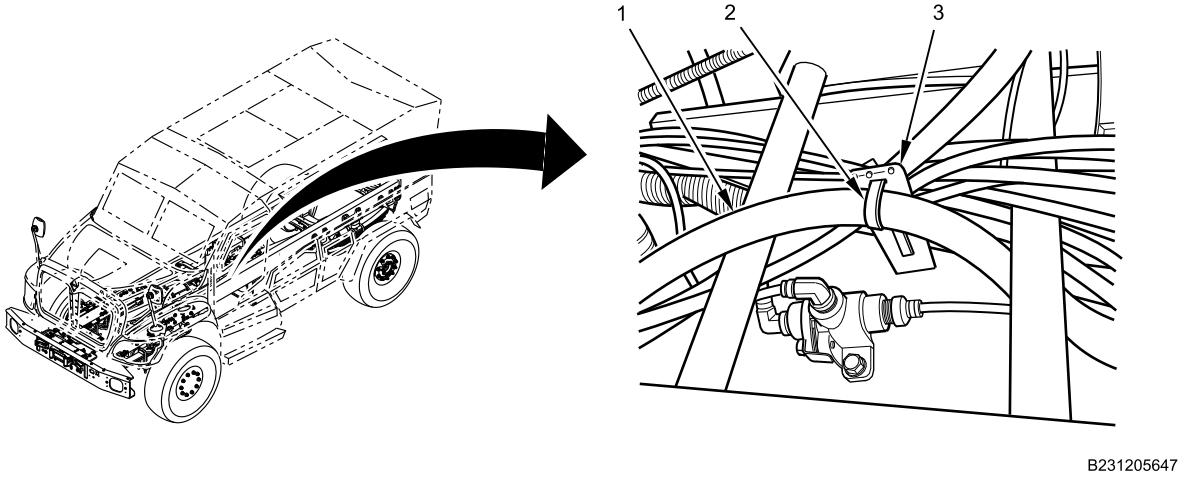

Figure 5. Air Line Hose Support Bracket.

11. Remove cable lock strap (Figure 5, Item 2) from air compressor delivery air line hose (Figure 5, Item 1) and support bracket (Figure 5, Item 3) on frame. Discard cable lock strap (Figure 5, Item 2).

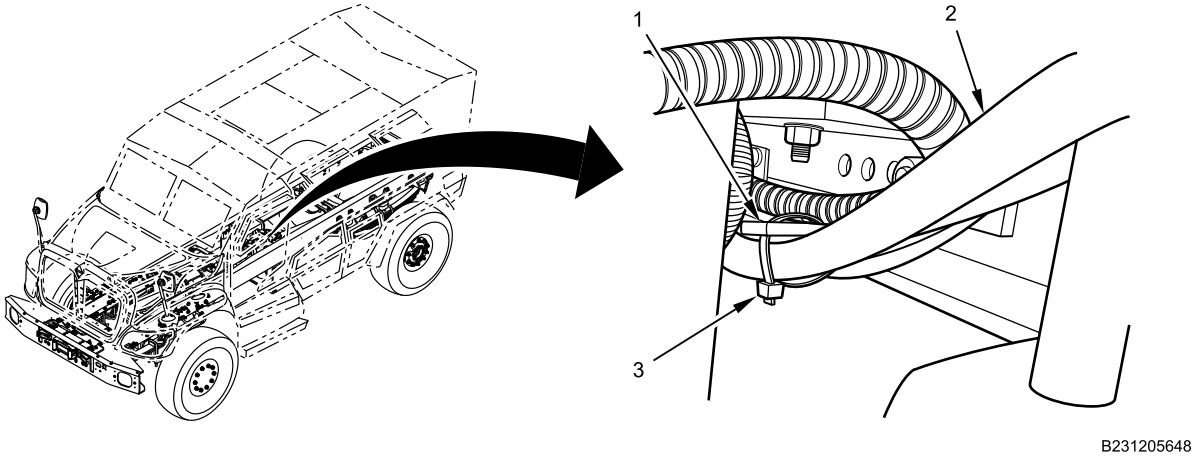

Figure 6. Air Line Hose Support Bracket.

12. Remove cable lock strap (Figure 6, Item 3) from air compressor delivery air line hose (Figure 6, Item 2) and support bracket (Figure 6, Item 1) on frame near front of transfer case. Discard cable lock strap.

AIR COMPRESSOR DELIVERY AIR LINE REMOVAL AND INSTALLATION - (CONTINUED)

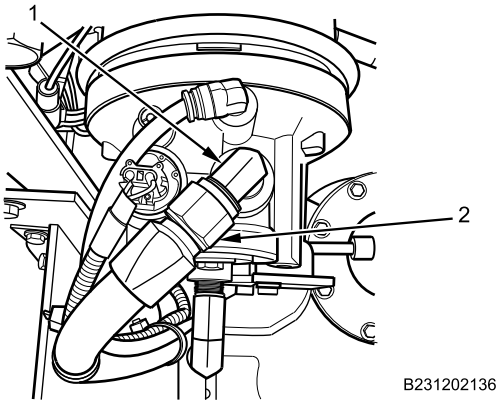

Figure 7. Air Line Hose at Air Dryer.

13. Disconnect air compressor delivery air line hose (Figure 7, Item 2) from air dryer fitting (Figure 7, Item 1).
14. Remove air compressor delivery air line hose (Figure 7, Item 2) from vehicle.

END OF TASK

AIR COMPRESSOR DELIVERY AIR LINE REMOVAL AND INSTALLATION - (CONTINUED)

ASSEMBLY

NOTE

Inspect air compressor tube for damage. If tube is split, bent or crushed, or ferrule compression nuts are damaged, replace tube assembly. If no damage is found, proceed to installation.

Use old air compressor tube for a template so original shape and bends can be duplicated.

When replacing air compressor tube, new compression sleeves and ferrule compression nuts must be used.

Use tube bender set when bending tube to prevent kinks or constrictive bends.

1. Cut new air compressor tube (Figure 8, Item 3) to 36 in. (90.4 cm), using tube cutter.

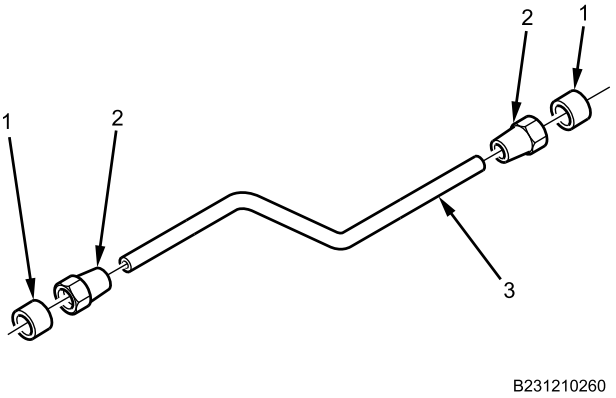

Figure 8. Fabricating Air Compressor Tube.

2. Bend angles in air compressor tube to match old air compressor tube (Figure 8, Item 3).
3. Slide new ferrule compression nut (Figure 8, Item 2) on each end of air compressor tube (Figure 8, Item 3).
4. Slide new compression sleeve (Figure 8, Item 1) on each end air compressor tube (Figure 8, Item 3).

AIR COMPRESSOR DELIVERY AIR LINE REMOVAL AND INSTALLATION - (CONTINUED)

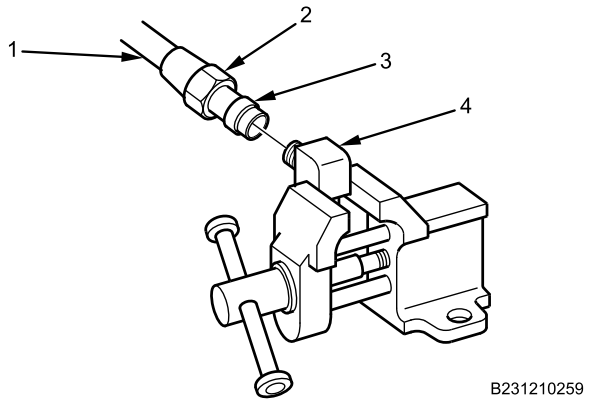

Figure 9. Making Air Compressor Tube Ends.

5. Mount 45-degree elbow fitting (Figure 9, Item 4) removed from air compressor in vise.
6. Push air compressor tube (Figure 9, Item 1) into elbow (Figure 9, Item 4) until it stops.
7. Thread ferrule compression nut (Figure 9, Item 2) onto elbow and tighten securely.
8. Remove ferrule compression nut (Figure 9, Item 2) from elbow (Figure 9, Item 4) and inspect compression sleeve (Figure 9, Item 3). Sleeve should be tight on tube (Figure 9, Item 1). If compression sleeve is loose, reinstall ferrule compression nut on elbow fitting and tighten further until compression sleeve is secure to tube.
9. Repeat steps 5-8 on other end of air compressor tube (Figure 9, Item 1).

END OF TASK

INSTALLATION

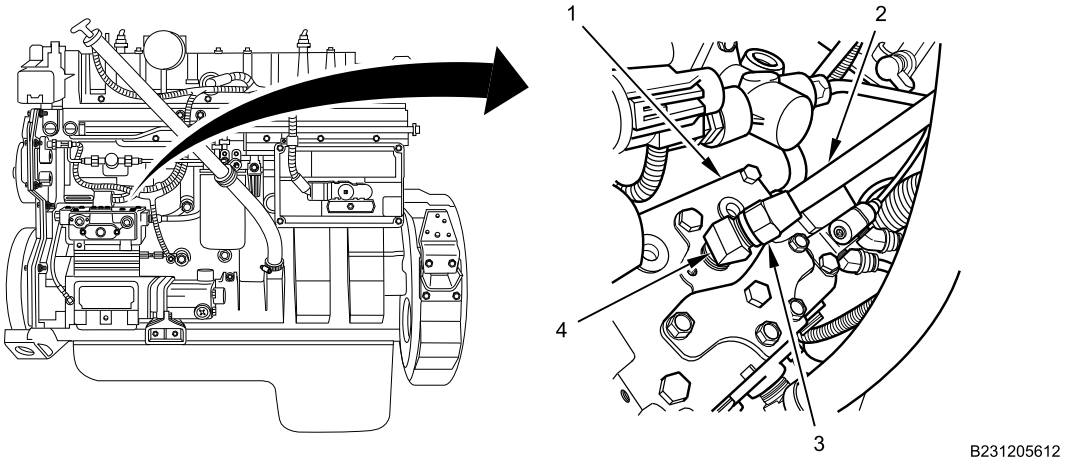

Figure 10. Air Compressor Connection.

1. Apply thread sealant tape to threads of angle fitting (Figure 10, Item 4).
2. Install angle fitting (Figure 10, Item 4) on air compressor (Figure 10, Item 1) and tighten securely.
3. Position air compressor delivery air line pipe (Figure 10, Item 2) in vehicle, and loosely install compression nut (Figure 10, Item 3) on angle fitting (Figure 10, Item 4).

AIR COMPRESSOR DELIVERY AIR LINE REMOVAL AND INSTALLATION - (CONTINUED)

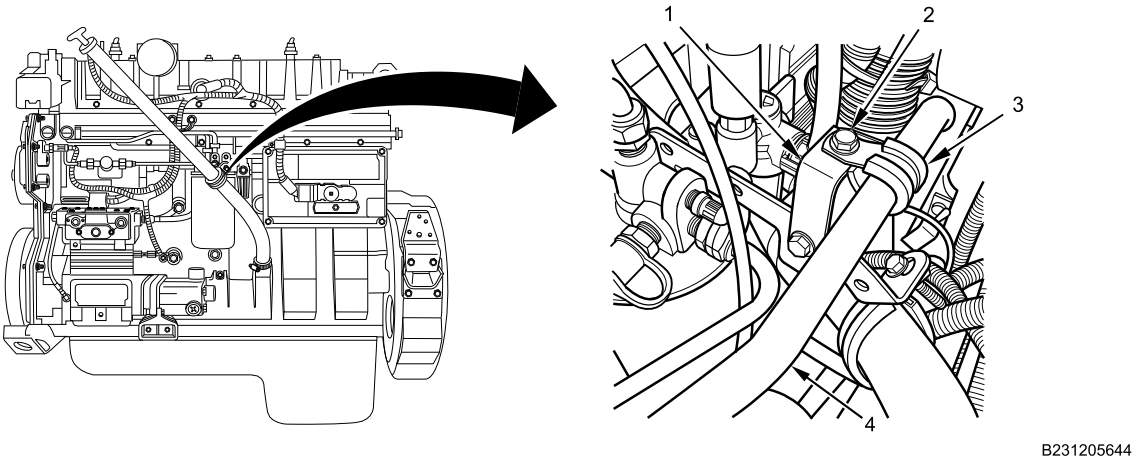

Figure 11. Air Compressor Delivery Air Line Bracket Clamp.

4. Install pipe clamp (Figure 11, Item 3) on air compressor delivery air line pipe (Figure 11, Item 4).

WARNING

Corrosion preventive compound is toxic. Use only in well-ventilated area. Do not get in eyes; wear chemical safety goggles and full-face shield when using. Avoid contact with skin and wear rubber or plastic, solvent-resistant gloves. In case of contact, remove contaminated clothing and immediately wash area with soap and water. If compound contacts eyes, flush eyes with large amounts of water for at least 15 minutes and get immediate medical attention. If swallowed, do not induce vomiting; contact a physician immediately. Failure to comply may result in serious injury or death to personnel.

5. Apply corrosion preventive compound to pipe clamp bolt (Figure 11, Item 2).
6. Loosely install pipe clamp (Figure 11, Item 3) on support bracket (Figure 11, Item 1) at fuel filter with clamp bolt (Figure 11, Item 2) and nut (not shown).

AIR COMPRESSOR DELIVERY AIR LINE REMOVAL AND INSTALLATION - (CONTINUED)

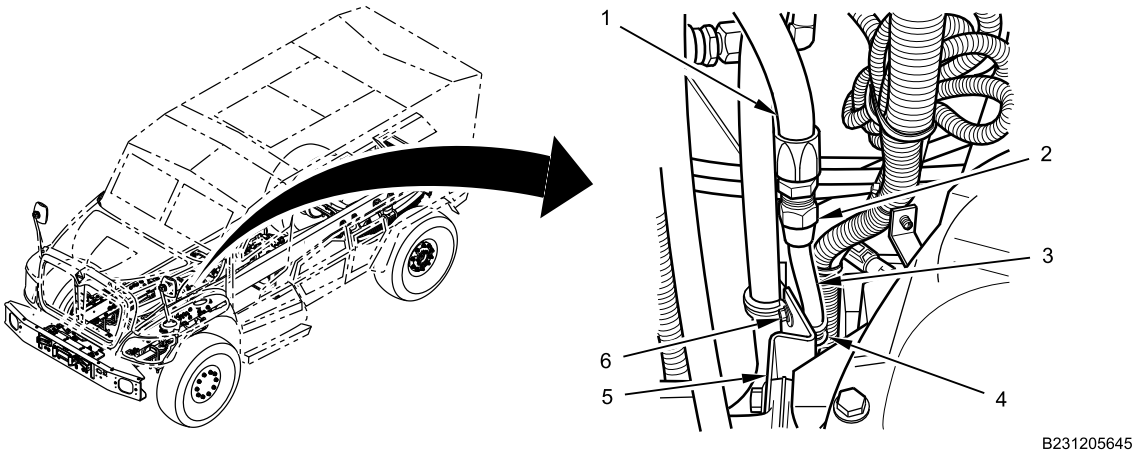

Figure 12. Air Line Pipe and Hose Connection.

NOTE

The following steps are performed under vehicle along left inboard frame rail.

7. Install pipe clamp (Figure 12, Item 4) on air compressor delivery air line pipe (Figure 12, Item 3).
8. Apply corrosion preventive compound to pipe clamp bolt (Figure 12, Item 6).
9. Install pipe clamp (Figure 12, Item 4) on support bracket (Figure 12, Item 5) with clamp bolt (Figure 12, Item 6) and nut (not shown).
10. Tighten clamp bolt (Figure 12, Item 6) and nut securely.
11. Position air compressor delivery air line hose (Figure 12, Item 1) in vehicle. Install compression nut (Figure 12, Item 2) on fitting on air compressor delivery air line hose (Figure 12, Item 1) and tighten securely.

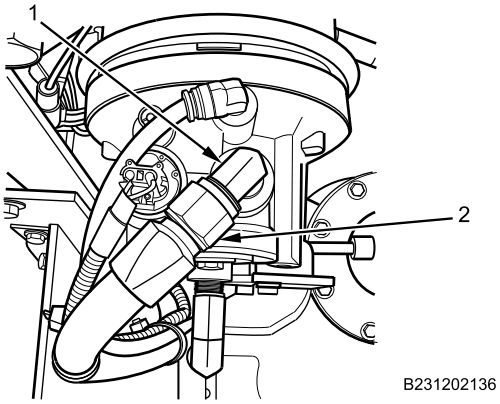

Figure 13. Air Line Hose at Air Dryer.

12. Apply thread sealant tape to threads of air dryer fitting (Figure 13, Item 1).
13. Install air compressor delivery air line hose (Figure 13, Item 2) on air dryer fitting (Figure 13, Item 1) and tighten securely.

AIR COMPRESSOR DELIVERY AIR LINE REMOVAL AND INSTALLATION - (CONTINUED)

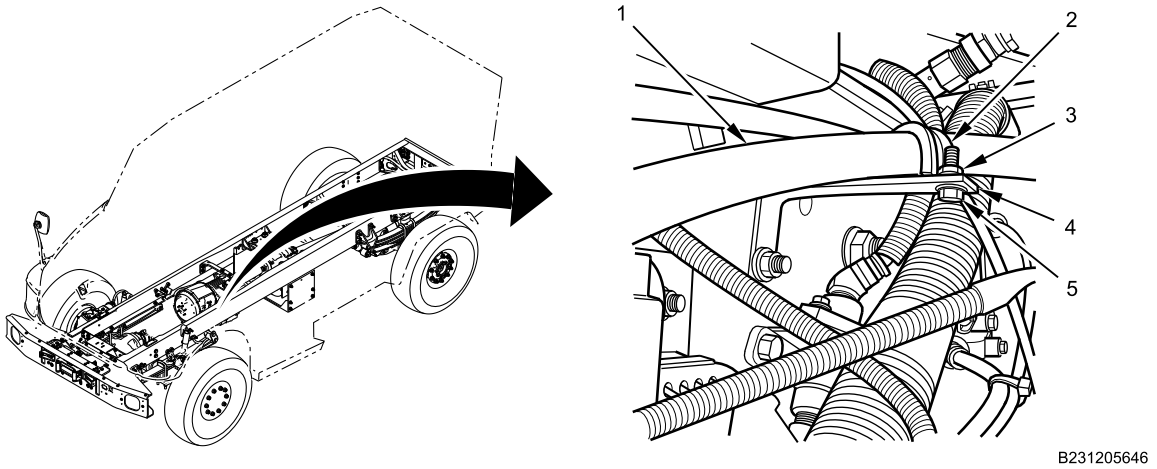

Figure 14. Air Line Hose Support Bracket.

14. Install hose clamp (Figure 14, Item 2) on air compressor delivery air line hose (Figure 14, Item 1).
15. Apply corrosion preventive compound to pipe clamp bolt (Figure 14, Item 5).
16. Install hose clamp (Figure 14, Item 2) on support bracket (Figure 14, Item 4) with nut (Figure 14, Item 3) and bolt (Figure 14, Item 5) and tighten securely.
17. Install new cable lock straps and tighten securely.

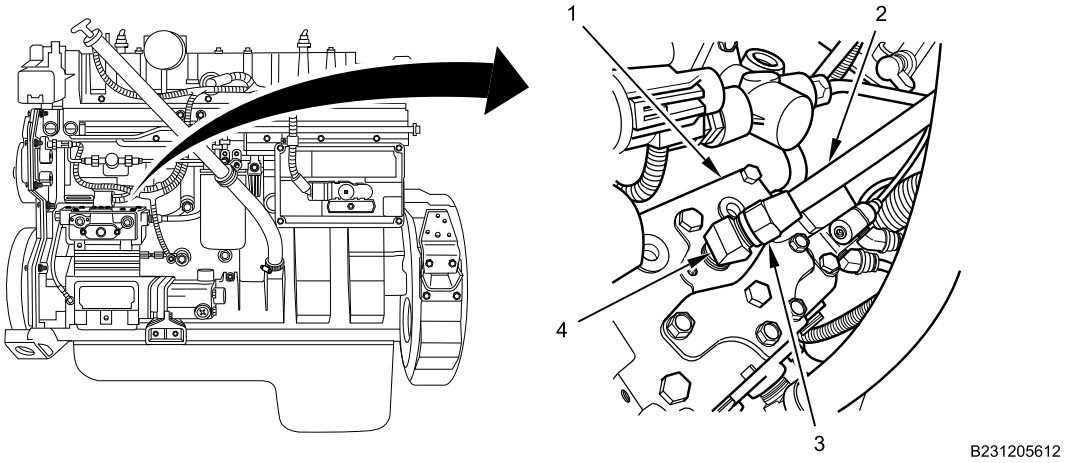

Figure 15. Air Compressor Connection.

18. Tighter air compressor delivery tube (Figure 15, Item 2) compression fitting (Figure 15, Item 3) at angle elbow (Figure 15, Item 4) on air compressor (Figure 15, Item 1) securely.

END OF TASK

FOLLOW-ON MAINTENANCE

1. Install left charge air cooler pipe (WP 0264).
2. Close and secure engine hood (TM 9-2355-106-10).
3. Remove wheel chocks (TM 9-2355-106-10).
4. Turn MAIN POWER switch on (TM 9-2355-106-10).
5. Start engine and let air pressure build to normal operating level (TM 9-2355-106-10).

AIR COMPRESSOR DELIVERY AIR LINE REMOVAL AND INSTALLATION - (CONTINUED)

6. Test-drive vehicle to verify brake system operation.
7. Set transmission in NEUTRAL (N) (TM 9-2355-106-10).
8. Set vehicle parking brake (TM 9-2355-106-10).
9. Turn engine off (TM 9-2355-106-10).
10. Turn MAIN POWER switch off (TM 9-2355-106-10).
11. Chock wheels (TM 9-2355-106-10).
12. Install left engine armor plate bracket (WP 0598).
13. Install belly armor (WP 0606).
14. Remove wheel chocks (TM 9-2355-106-10).

END OF TASK

END OF WORK PACKAGE

FIELD MAINTENANCE

AIR COMPRESSOR GOVERNOR REMOVAL AND INSTALLATION

INITIAL SETUP:

Tools and Special Tools
General Mechanic's Tool Kit (GMTK) (WP 0795, Item 37)

Materials/Parts
Compound (WP 0794, Item 13)
Faceshield, industrial (WP 0794, Item 16)
Gasket (WP 0796, Item 63)
Goggles, industrial (WP 0794, Item 20)
Gloves (WP 0794, Item 18)

References
TM 9-2355-106-10
TM 9-2355-106-23P
WP 0782

Equipment Condition
Parking brake set (TM 9-2355-106-10)
Transmission set in NEUTRAL (N) (TM 9-2355-106-10)
Engine shut off (TM 9-2355-106-10)
Vehicle parking brake set (TM 9-2355-106-10)
MAIN POWER switch off (TM 9-2355-106-10)
Wheels chocked (TM 9-2355-106-10)
Engine hood open and secured (TM 9-2355-106-10)
Air pressure drained from all air tanks (TM 9-2355-106-10)

WARNING

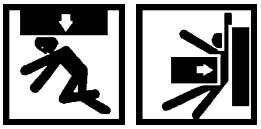

Engine hood is extremely heavy and requires two-person lift. Ensure that there is adequate space in front of the vehicle to open hood completely without pinning or pinching personnel between hood and any other structure. Use extreme care when working under hood and make sure it is properly supported. Failure to comply may result in serious injury or death to personnel.

AIR COMPRESSOR GOVERNOR REMOVAL AND INSTALLATION - (CONTINUED)

REMOVAL

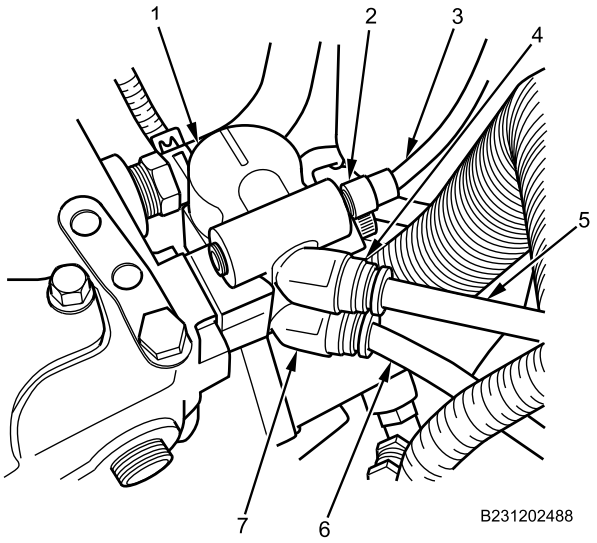

Figure 1. Air Compressor Governor Connections.

1. Disconnect BLACK exhaust brake solenoid supply air line connection (Figure 1, Item 3) from air compressor governor (Figure 1, Item 1) fitting (Figure 1, Item 2).
2. Disconnect BLACK reservoir supply air line connection (Figure 1, Item 5) from air compressor governor (Figure 1, Item 1) fitting (Figure 1, Item 4).
3. Disconnect SILVER unloader port air line connection (Figure 1, Item 6) from air compressor governor (Figure 1, Item 1) fitting (Figure 1, Item 7).

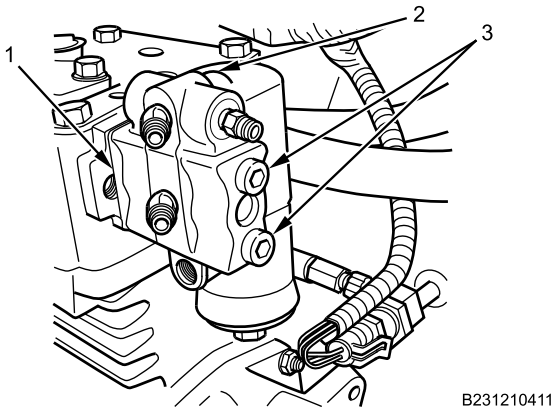

Figure 2. Air Compressor Governor.

4. Remove air compressor governor bolts (Figure 2, Item 3) from air compressor governor (Figure 2, Item 2), and remove air compressor governor and air compressor governor gasket (Figure 2, Item 1) from air compressor. Discard air compressor governor gasket (Figure 2, Item 1).

AIR COMPRESSOR GOVERNOR REMOVAL AND INSTALLATION - (CONTINUED)

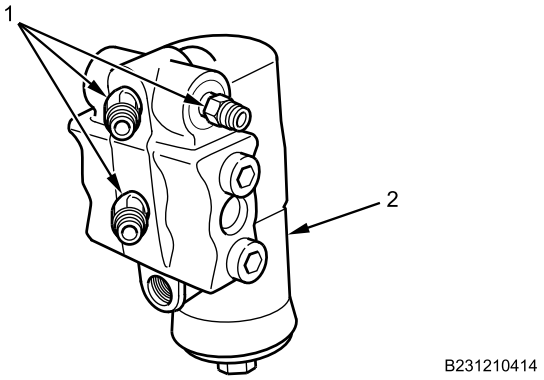

Figure 3. Air Compressor Governor Fittings.

5. Remove air compressor governor fittings (Figure 3, Item 1) from air compressor governor (Figure 3, Item 2).

END OF TASK

INSTALLATION

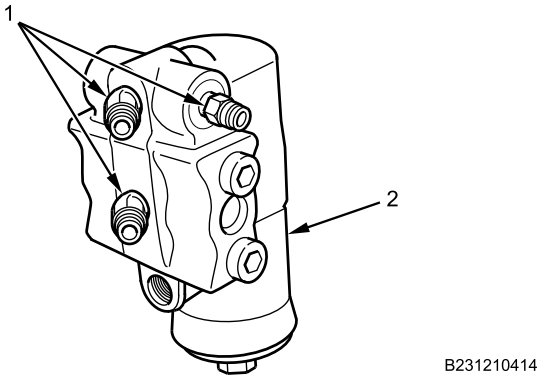

Figure 4. Air Compressor Governor Fittings.

1. Install fittings (Figure 4, Item 1) on air compressor governor (Figure 4, Item 2) and tighten securely.

AIR COMPRESSOR GOVERNOR REMOVAL AND INSTALLATION - (CONTINUED)

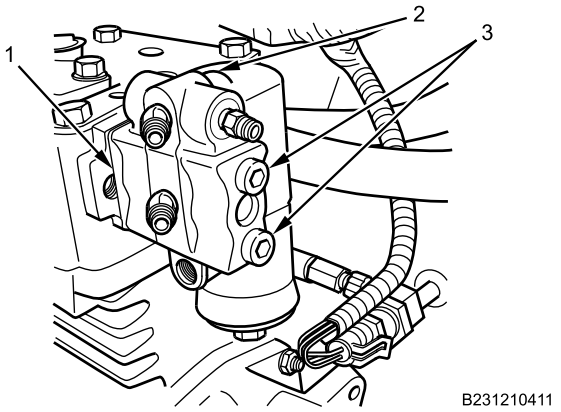

Figure 5. Air Compressor Governor.

WARNING

Corrosion preventive compound is toxic. Use only in well-ventilated area. Do not get in eyes; wear chemical safety goggles and full-face shield when using. Avoid contact with skin and wear rubber or plastic, solvent-resistant gloves. In case of contact, remove contaminated clothing and immediately wash area with soap and water. If compound contacts eyes, flush eyes with large amounts of water for at least 15 minutes and get immediate medical attention. If swallowed, do not induce vomiting; contact a physician immediately. Failure to comply may result in serious injury or death to personnel.

2. Apply corrosion preventive compound to governor bolts (Figure 5, Item 3).
3. Position new governor gasket (Figure 5, Item 1) and governor (Figure 5, Item 2) on air compressor and install governor bolts (Figure 5, Item 3). Tighten bolts securely.

AIR COMPRESSOR GOVERNOR REMOVAL AND INSTALLATION - (CONTINUED)

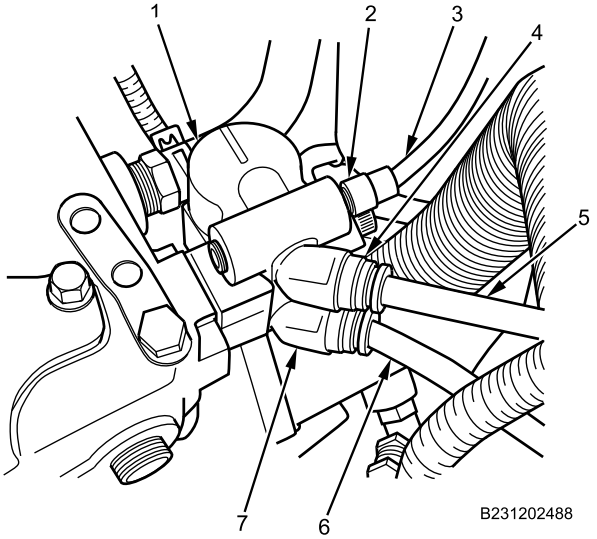

Figure 6. Air Compressor Governor Connections.

4. Connect SILVER unloader port air line connection (Figure 6, Item 6) on governor fitting (Figure 6, Item 7).
5. Connect BLACK reservoir supply air line connection (Figure 6, Item 5) on governor fitting (Figure 6, Item 4).
6. Connect BLACK exhaust brake solenoid supply air line connection (Figure 6, Item 3) on governor fitting (Figure 6, Item 2).

END OF TASK

FOLLOW-ON MAINTENANCE

1. Turn MAIN POWER switch on (TM 9-2355-106-10).
2. Start engine (TM 9-2355-106-10).
3. Remove wheel chocks (TM 9-2355-106-10).
4. Start engine and let air pressure build to normal operating range (TM 9-2355-106-10).
5. Test-drive vehicle under normal conditions and verify brake system operation (TM 9-2355-106-10).
6. Set transmission to (N) neutral (TM 9-2355-106-10).
7. Set parking brake (TM 9-2355-106-10).
8. Turn engine off (TM 9-2355-106-10).
9. Turn MAIN POWER switch off (TM 9-2355-106-10).

END OF TASK

END OF WORK PACKAGE

FIELD MAINTENANCE

AIR COMPRESSOR GOVERNOR ADJUSTMENT PROCEDURE

INITIAL SETUP:

Tools and Special Tools
General Mechanic's Tool Kit (GMTK) (WP 0795, Item 37)

References
TM 9-2355-106-10
WP 0782

Equipment Condition
Parking brake set (TM 9-2355-106-10)
Transmission set in NEUTRAL (N) (TM 9-2355-106-10)
Engine shut off (TM 9-2355-106-10)
MAIN POWER switch off (TM 9-2355-106-10)
Wheels chocked (TM 9-2355-106-10)
Left side engine armor plate removed (WP 0597)
Left engine armor plate bracket removed (WP 0598)

AIR COMPRESSOR GOVERNOR ADJUSTMENT PROCEDURE

WARNING

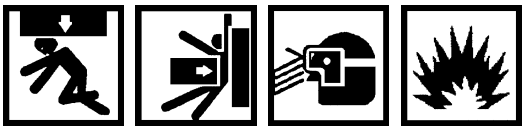

Engine hood is extremely heavy and requires two-person lift. Ensure that there is adequate space in front of the vehicle to open hood completely without pinning or pinching personnel between hood and any other structure. Use extreme care when working under hood and make sure it is properly supported. Failure to comply may result in serious injury or death to personnel.

Do not overadjust governor pressure setting. Excessive system pressure can cause damage to equipment and serious injury or death to personal.

NOTE

Adjusting screw will adjust cut-in and cut-out pressure settings in unison. Setting between cut-in and cut-out pressure is not adjustable.

AIR COMPRESSOR GOVERNOR ADJUSTMENT PROCEDURE - (CONTINUED)

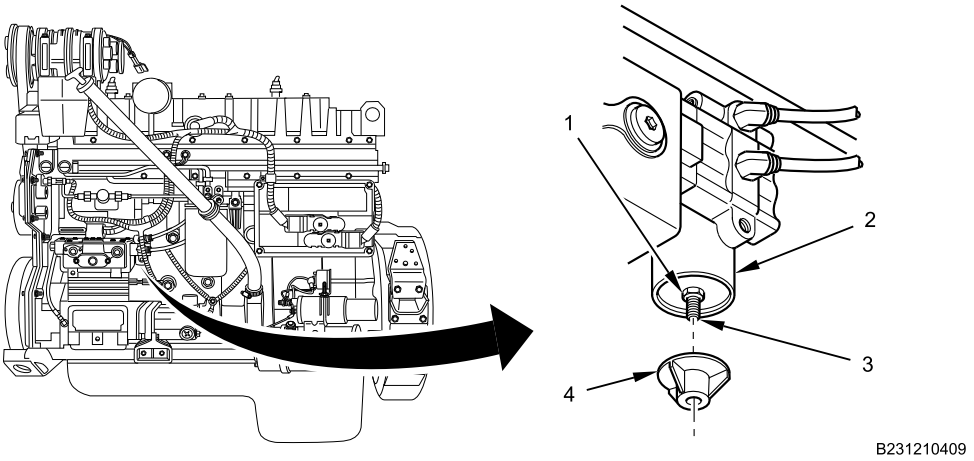

Figure 1. Air Compressor Governor

1. Remove cover (Figure 1, Item 4) from air compressor governor (Figure 1, Item 2).
2. Loosen locknut (Figure 1, Item 1) on adjusting screw (Figure 1, Item 3).

NOTE

Turning adjusting screw 1/4 turn causes a change in pressure of approximately 4 psi (28 kPa).

3. To raise pressures, turn adjusting screw (Figure 1, Item 3) counterclockwise . To lower pressures, turn adjusting screw (Figure 1, Item 3) clockwise.
4. Tighten locknut (Figure 1, Item 1) securely.
5. Install governor cover (Figure 1, Item 4).

END OF TASK

FOLLOW-ON MAINTENANCE

1. Install left engine armor plate bracket (WP 0598).
2. Install left side engine armor plate (WP 0597).
3. Close and secure engine hood (TM 9-2355-106-10).
4. Turn MAIN POWER switch on (TM 9-2355-106-10).
5. Remove wheel chocks (TM 9-2355-106-10).
6. Drive vehicle and verify brake system operation (TM 9-2355-106-10).
7. Set parking brake (TM 9-2355-106-10).
8. Set transmission in NEUTRAL (N) (TM 9-2355-106-10).
9. Turn engine off (TM 9-2355-106-10).
10. Turn MAIN POWER switch off (TM 9-2355-106-10).

END OF TASK

END OF WORK PACKAGE

FIELD MAINTENANCE

AIR COMPRESSOR REMOVAL AND INSTALLATION

INITIAL SETUP:

Tools and Special Tools
General Mechanic's Tool Kit (GMTK) (WP 0795, Item 37)
Torque wrench, 3/8-inch drive (20-100 lb-ft) (WP 0795, Item 141)

Materials/Parts
Antiseize compound (WP 0794, Item 6)
Gasket (WP 0796, Item 63)
Goggles, industrial (WP 0794, Item 20)
Faceshield, industrial (WP 0794, Item 16)
Gloves (WP 0794, Item 71)
Sealing compound (WP 0794, Item 45)

References
TM 9-2355-106-10
TM 9-2355-106-23P
WP 0786
WP 0782

Equipment Condition
Parking brake set (TM 9-2355-106-10)
Transmission set in NEUTRAL (N) (TM 9-2355-106-10)
Engine shut off (TM 9-2355-106-10)
MAIN POWER switch off (TM 9-2355-106-10)
Wheels chocked (TM 9-2355-106-10)
Engine hood open and secure (TM 9-2355-106-10)
Air pressure drained from all air tanks (TM 9-2355-106-10)
Left engine armor bracket removed (WP 0598)
Left charge air cooler pipe removed (WP 0264)
Drain cooling system (WP 0277)
Fuel filter removed (WP 0269)
Air compressor governor removed (WP 0525)
Power steering pump removed (WP 0539)

WARNING

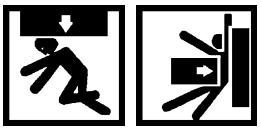

Engine hood is extremely heavy and requires two-person lift. Ensure that there is adequate space in front of the vehicle to open hood completely without pinning or pinching personnel between hood and any other structure. Use extreme care when working under hood and make sure it is properly supported. Failure to comply may result in serious injury or death to personnel.

Before working on air brake system or any auxiliary pressurized system, make sure air pressure has been drained from all reservoirs. Failure to comply may result in serious injury or death to personnel.

Engine components become extremely hot during normal operation. Allow engine to cool completely prior to performing maintenance. Use extreme care when working in close quarters in engine compartment. Stay clear of rotating parts. Wear safety goggles, work gloves, and long sleeves or shop coat. Failure to comply may result in serious injury or death to personnel.

AIR COMPRESSOR REMOVAL AND INSTALLATION - (CONTINUED)

REMOVAL

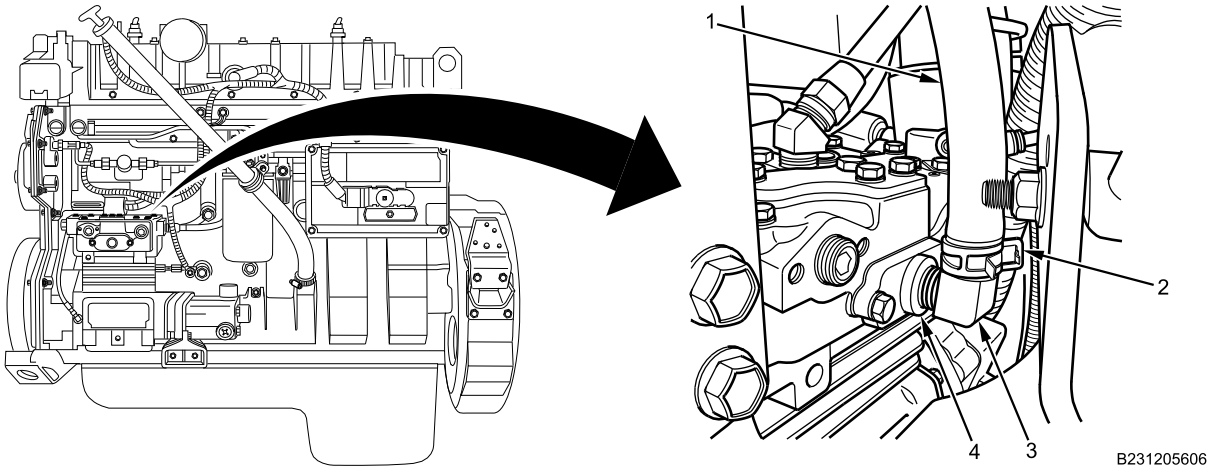

Figure 1. Air Compressor Connection.

1. Remove air compressor supply air line clamp (Figure 1, Item 2) and air compressor supply air line (Figure 1, Item 1) from angle fitting (Figure 1, Item 3).
2. Remove angle fitting (Figure 1, Item 3) from air compressor air inlet port (Figure 1, Item 4).

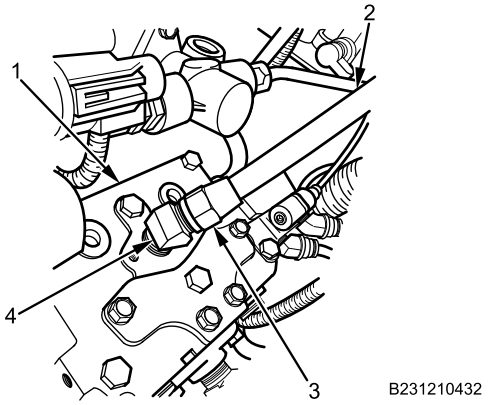

Figure 2. Air Compressor Connection.

3. Disconnect compression nut (Figure 2, Item 3) and air compressor delivery air line pipe (Figure 2, Item 2) from angle fitting (Figure 2, Item 4).
4. Remove angle fitting (Figure 2, Item 4) from air compressor (Figure 2, Item 1).

AIR COMPRESSOR REMOVAL AND INSTALLATION - (CONTINUED)

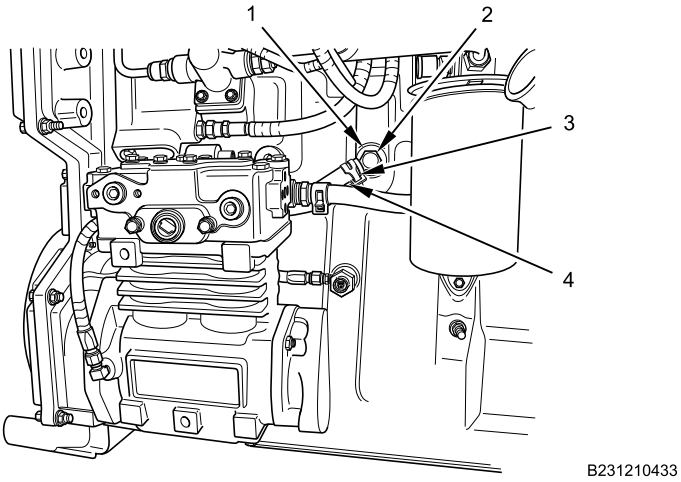

Figure 3. Air Compressor Coolant Inlet Block Connection.

5. Remove air compressor coolant inlet hose clamp (Figure 3, Item 3) and coolant hose (Figure 3, Item 4) from angle fitting (Figure 3, Item 2).
6. Remove angle fitting (Figure 3, Item 2) from engine block coolant port (Figure 3, Item 1).

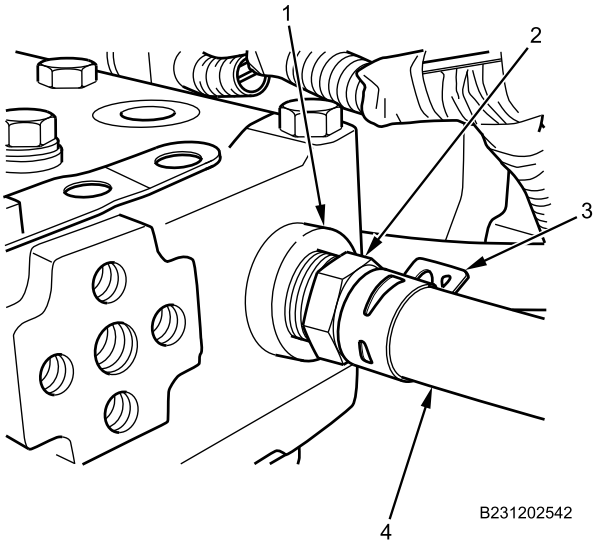

Figure 4. Air Compressor Coolant Outlet.

7. Remove air compressor coolant outlet hose clamp (Figure 4, Item 3) and coolant hose (Figure 4, Item 4) from fitting (Figure 4, Item 2).
8. Remove fitting (Figure 4, Item 2) from air compressor coolant outlet port (Figure 4, Item 1).

AIR COMPRESSOR REMOVAL AND INSTALLATION - (CONTINUED)

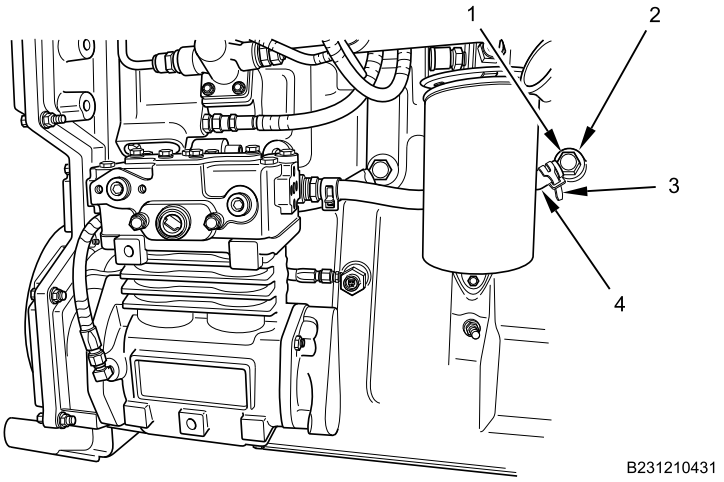

Figure 5. Air Compressor Coolant Outlet Block Connection.

NOTE

Perform steps 9 and 10 if coolant hose is unserviceable.

9. Remove air compressor coolant outlet hose clamp (Figure 5, Item 3) and coolant hose (Figure 5, Item 4) from angle fitting (Figure 5, Item 1).
10. Remove angle fitting (Figure 5, Item 1) from engine block coolant port (Figure 5, Item 2).

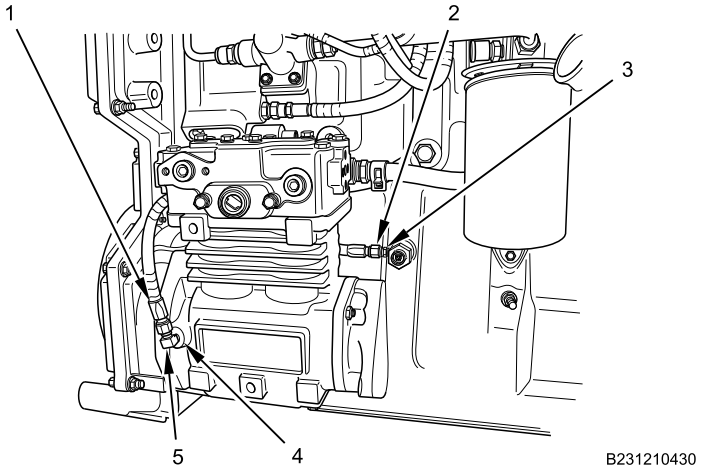

Figure 6. Air Compressor Oil Inlet.

11. Disconnect air compressor oil inlet hose (Figure 6, Item 1) from angle fitting (Figure 6, Item 5).
12. Remove angle fitting (Figure 6, Item 5) from air compressor oil inlet port (Figure 6, Item 2).

AIR COMPRESSOR REMOVAL AND INSTALLATION - (CONTINUED)

NOTE

Perform step 13 if oil inlet hose is unserviceable.

13. Disconnect and remove air compressor oil inlet hose fitting (Figure 6, Item 2) from tee fitting (Figure 6, Item 4), and remove oil inlet hose (Figure 6, Item 1).

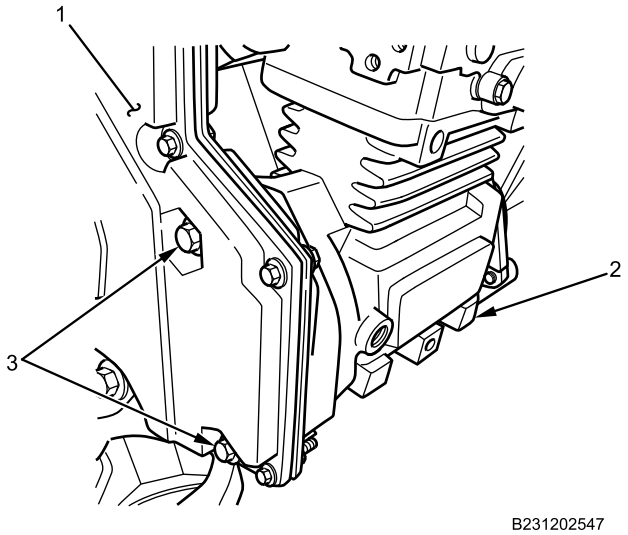

Figure 7. Air Compressor.

14. Remove two air compressor-to-engine block mounting bolts (Figure 7, Item 3) from engine front cover (Figure 7, Item 1) and remove air compressor (Figure 7, Item 2).

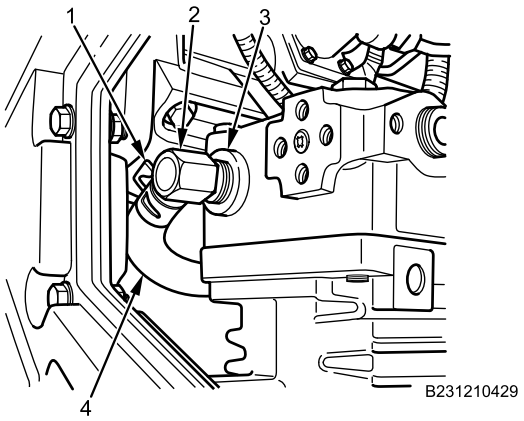

Figure 8. Air Compressor Coolant Inlet.

15. Remove air compressor coolant inlet hose clamp (Figure 8, Item 1) and coolant hose (Figure 8, Item 4) from angle fitting (Figure 8, Item 2).
16. Remove angle fitting (Figure 8, Item 2) from air compressor coolant inlet port (Figure 8, Item 3).

AIR COMPRESSOR REMOVAL AND INSTALLATION - (CONTINUED)

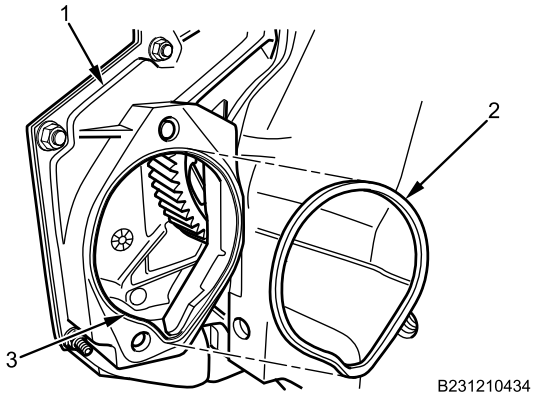

Figure 9. Air Compressor Front Cover Gasket.

17. Remove air compressor cover gasket (Figure 9, Item 2) from groove (Figure 9, Item 3) in front cover (Figure 9, Item 1). Discard gasket.

END OF TASK

INSTALLATION

WARNING

Thread sealing compound is harmful to skin and eyes. If thread sealing compound contacts eyes, rinse thoroughly and contact physician if irritation persists. If skin is contacted, wash thoroughly with soap and water. Failure to comply may result in serious injury to personnel.

AIR COMPRESSOR REMOVAL AND INSTALLATION - (CONTINUED)

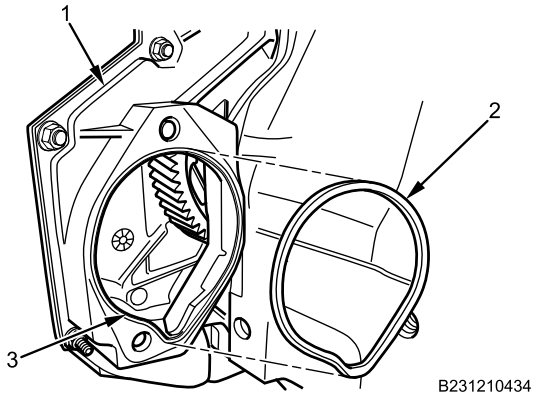

Figure 10. Air Compressor Front Cover Gasket.

1. Install new air compressor cover gasket (Figure 10, Item 2) on front cover (Figure 10, Item 1).

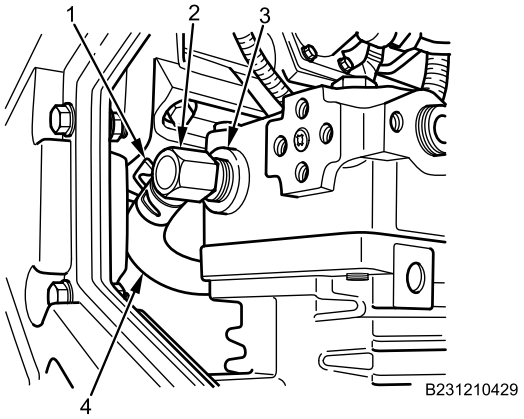

Figure 11. Air Compressor Coolant Inlet.

2. Apply thread sealing compound to angle fitting (Figure 11, Item 2), install fitting on air compressor coolant inlet port (Figure 11, Item 3), and tighten securely.
3. Install air compressor coolant inlet hose (Figure 11, Item 4) and hose clamp (Figure 11, Item 1) on angle fitting (Figure 11, Item 2).

AIR COMPRESSOR REMOVAL AND INSTALLATION - (CONTINUED)

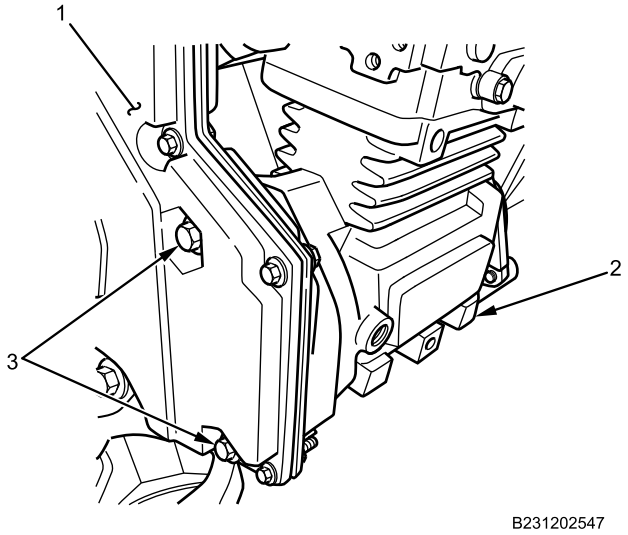

Figure 12. Air Compressor.

WARNING

Corrosion preventive compound is toxic. Use only in well-ventilated area. Do not get in eyes; wear chemical safety goggles and full-face shield when using. Avoid contact with skin and wear rubber or plastic, solvent-resistant gloves. In case of contact, remove contaminated clothing and immediately wash area with soap and water. If compound contacts eyes, flush eyes with large amounts of water for at least 15 minutes and get immediate medical attention. If swallowed, do not induce vomiting; contact a physician immediately. Failure to comply may result in serious injury or death to personnel.

4. Apply corrosion preventive compound to air compressor mounting bolts (Figure 12, Item 3).

CAUTION

Mounting bolts for the air compressor and air compressor mounts must be tightened using the following sequence and specifications. Failure to follow the procedures can cause the front cover to warp or fracture.

5. Position air compressor (Figure 12, Item 2) and install two air compressor mounting bolts (Figure 12, Item 3) through engine front cover (Figure 12, Item 1). Torque bolts to 46 lb-ft (62 N•m).

AIR COMPRESSOR REMOVAL AND INSTALLATION - (CONTINUED)

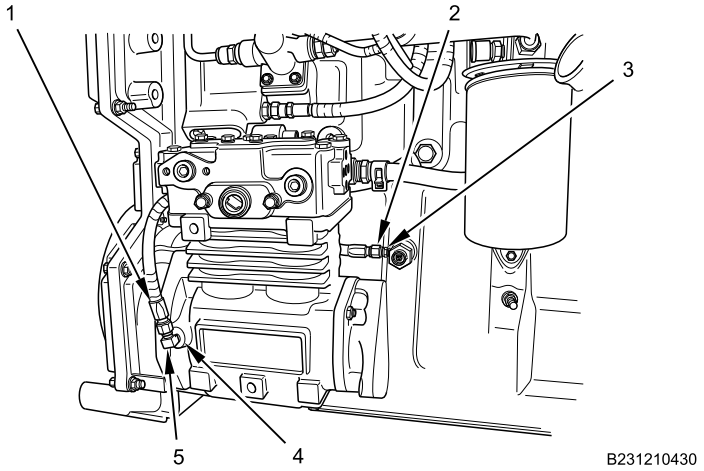

Figure 13. Air Compressor Oil Inlet.

NOTE

Perform steps 6 through 8 if oil inlet hose was removed.

Perform steps 9 and 10 if coolant outlet hose was removed.

6. Connect air compressor oil inlet hose (Figure 13, Item 3) to tee fitting (Figure 13, Item 4).
7. Apply thread sealing compound to angle fitting (Figure 13, Item 5), and install angle fitting to air compressor oil inlet port (Figure 13, Item 2).
8. Connect air compressor oil inlet hose fitting (Figure 13, Item 1) to angle fitting (Figure 13, Item 5).

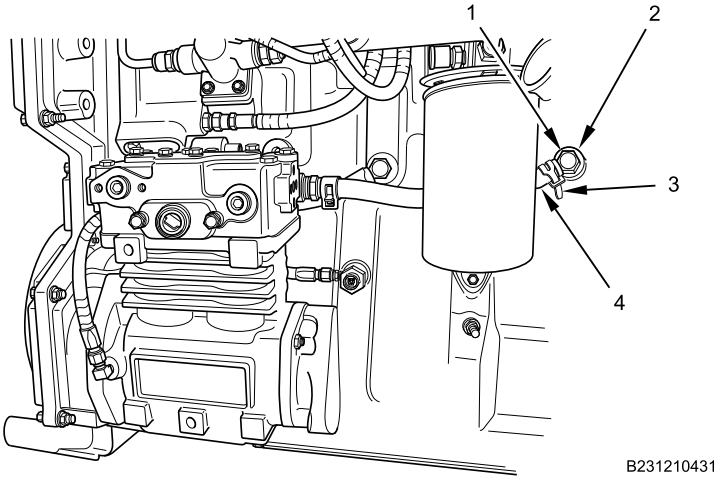

Figure 14. Air Compressor Coolant Outlet Block Connection.

9. Apply thread sealing compound to angle fitting (Figure 14, Item 1), install fitting on engine block coolant port (Figure 14, Item 2), and tighten securely.
10. Install air compressor coolant outlet hose (Figure 14, Item 4) and hose clamp (Figure 14, Item 3) on angle fitting (Figure 14, Item 1).

AIR COMPRESSOR REMOVAL AND INSTALLATION - (CONTINUED)

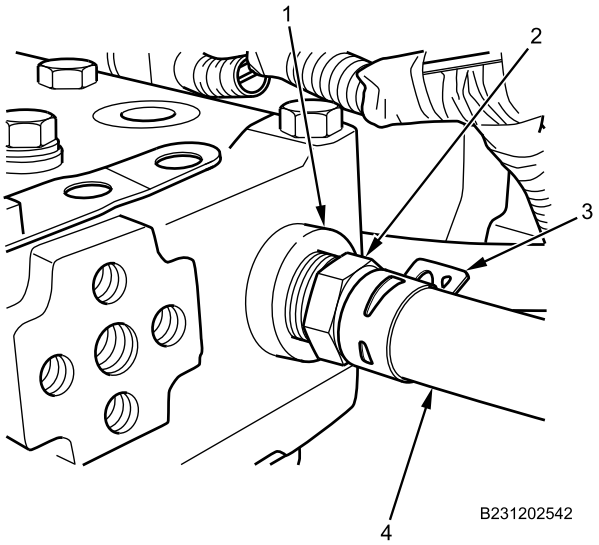

Figure 15. Air Compressor Coolant Outlet.

11. Apply thread sealing compound to fitting (Figure 15, Item 2), install fitting on air compressor coolant outlet port (Figure 15, Item 1), and tighten securely.
12. Install air compressor coolant outlet hose (Figure 15, Item 4) and hose clamp (Figure 15, Item 3) on fitting (Figure 15, Item 2).

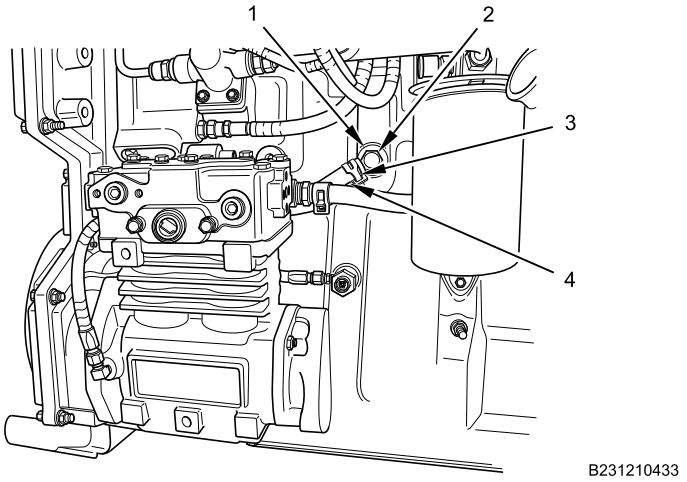

Figure 16. Air Compressor Coolant Inlet Block Connection.

13. Apply thread sealing compound to angle fitting (Figure 16, Item 2), install fitting on engine block coolant port (Figure 16, Item 1), and tighten securely.
14. Install air compressor coolant inlet hose (Figure 16, Item 4) and hose clamp (Figure 16, Item 3) on angle fitting (Figure 16, Item 2).

AIR COMPRESSOR REMOVAL AND INSTALLATION - (CONTINUED)

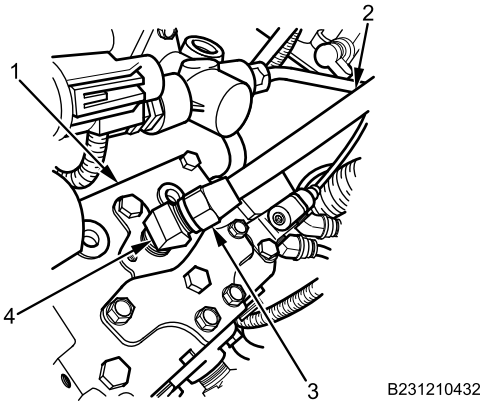

Figure 17. Air Compressor Connection.

15. Apply thread sealing compound to angle fitting (Figure 17, Item 4), install fitting on air compressor (Figure 17, Item 1), and tighten securely.
16. Connect air compressor delivery air line pipe (Figure 17, Item 2) with compression nut (Figure 17, Item 3) on angle fitting (Figure 17, Item 4) and tighten securely.

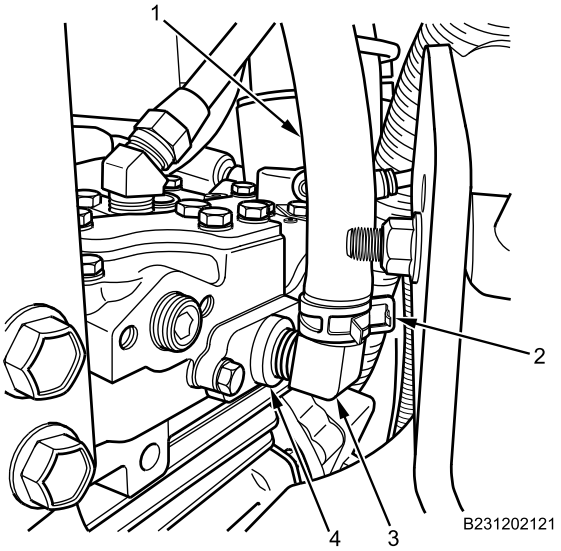

Figure 18. Air Compressor Connection.

17. Apply thread sealing compound to angle fitting (Figure 18, Item 3), install fitting on air compressor air inlet port (Figure 18, Item 4), and tighten securely.
18. Install air compressor supply air line (Figure 18, Item 1) and clamp (Figure 18, Item 2) on angle fitting (Figure 18, Item 3).

END OF TASK

AIR COMPRESSOR REMOVAL AND INSTALLATION - (CONTINUED)

FOLLOW-ON MAINTENANCE

1. Install power steering pump (WP 0539).
2. Install air compressor governor (WP 0525).
3. Install fuel filter (WP 0269).
4. Fill cooling system (WP 0277).
5. Install left charge air cooler pipe (WP 0264).
6. Turn MAIN POWER switch on (TM 9-2355-160-10).
7. Start engine, ensure air pressure builds to normal range (TM 9-2355-106-10).
8. Remove wheel chocks (TM 9-2355-106-10).
9. Test-drive vehicle to verify brake system operation (TM 9-2355-160-10).
10. Set transmission in NEUTRAL (N) (TM 9-2355-160-10).
11. Set vehicle parking brake (TM 9-2355-160-10).
12. Turn engine off (TM 9-2355-160-10).
13. Turn MAIN POWER switch off (TM 9-2355-160-10).
14. Chock wheels (TM 9-2355-106-10).
15. Install left engine armor bracket (WP 0598).
16. Close and secure engine hood (TM 9-2355-160-10).
17. Remove wheel chocks (TM 9-2355-106-10).

END OF TASK

END OF WORK PACKAGE

FIELD MAINTENANCE

GLADHANDS REMOVAL AND INSTALLATION

INITIAL SETUP:

Tools and Special Tools
General Mechanic's Tool Kit (GMTK) (WP 0795, Item 37)

Materials/Parts
Compound (WP 0794, Item 13)
Sealing compound (WP 0794, Item 44)
Faceshield, industrial (WP 0794, Item 16)
Gloves (WP 0794, Item 18)
Goggles, industrial (WP 0794, Item 20)
Cable lock strap, buttonhead - (2) (WP 0796, Item 133)
Lockwasher (WP 0796, Item 27)

References
TM 9-2355-106-10
TM 9-2355-106-23P
WP 0782

Equipment Condition
Parking brake set (TM 9-2355-106-10)
Transmission set in NEUTRAL (N) (TM 9-2355-106-10)
Engine shut off (TM 9-2355-106-10)
MAIN POWER switch off (TM 9-2355-106-10)
Wheels chocked (TM 9-2355-106-10)
Air tanks drained (TM 9-2355-106-10)

NOTE

Left side shown; right side similar.

Gladhands are mounted in both the front and rear of the vehicle.

REMOVAL

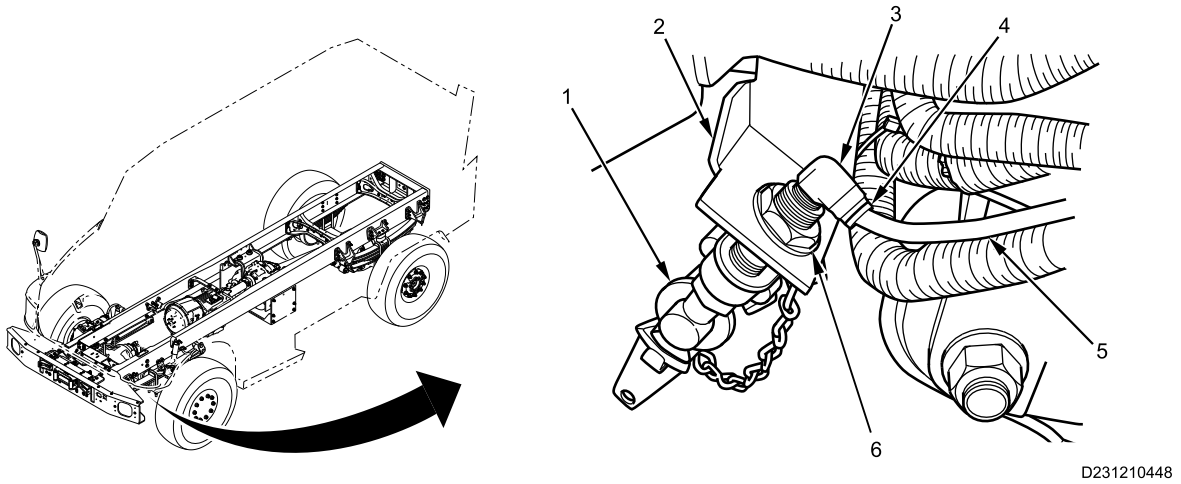

Figure 1. Gladhand.

1. Remove and discard cable lock straps as necessary.
2. Push air line hose (Figure 1, Item 5) into elbow fitting (Figure 1, Item 3), hold retaining ring (Figure 1, Item 4) in, and remove air line hose from elbow fitting.
3. Remove elbow fitting (Figure 1, Item 3) from gladhand (Figure 1, Item 1).
4. Remove nut (Figure 1, Item 6), lockwasher, and gladhand (Figure 1, Item 1) from bracket (Figure 1, Item 2). Discard lockwashers.

END OF TASK

GLADHANDS REMOVAL AND INSTALLATION - (CONTINUED)

INSTALLATION

WARNING

Corrosion preventive compound is toxic. Use only in well-ventilated area. Do not get in eyes; wear chemical safety goggles and full-face shield when using. Avoid contact with skin and wear rubber or plastic, solvent-resistant gloves. In case of contact, remove contaminated clothing and immediately wash area with soap and water. If compound contacts eyes, flush eyes with large amounts of water for at least 15 minutes and get immediate medical attention. If swallowed, do not induce vomiting; contact a physician immediately. Failure to comply may result in serious injury or death to personnel.

1. Apply corrosion preventive compound on gladhand threads.

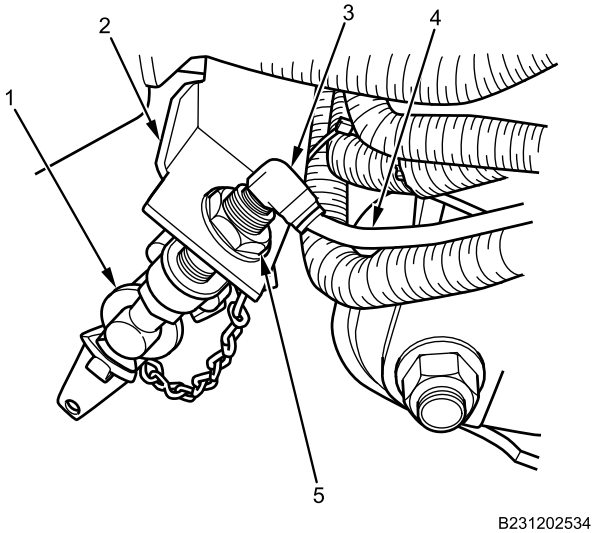

Figure 2. Gladhand.

2. Install gladhand (Figure 2, Item 1) into bracket (Figure 2, Item 2) with new lockwasher and nut (Figure 2, Item 5). Tighten and secure.

GLADHANDS REMOVAL AND INSTALLATION - (CONTINUED)

WARNING

Thread sealing compound is harmful to skin and eyes. If thread sealing compound contacts eyes, rinse thoroughly and contact physician if irritation persists. If skin is contacted, wash thoroughly with soap and water. Failure to comply may result in serious injury to personnel.

CAUTION

Do not allow thread sealing compound into gladhand. Failure to comply may result in damage to equipment.

3. Apply thread sealing compound on elbow fitting threads.
4. Install elbow fitting (Figure 2, Item 3) into gladhand (Figure 2, Item 1). Tighten and secure.
5. Connect air line hose (Figure 2, Item 4) into elbow fitting (Figure 2, Item 3).
6. Install new cable lock straps as necessary.

END OF TASK

FOLLOW-ON MAINTENANCE

1. Turn MAIN POWER switch on (TM 9-2355-106-10).
2. Start engine and allow air brake system pressure to build to normal range (TM 9-2355-106-10).
3. Check for leaks.
4. Turn engine off (TM 9-2355-106-10).
5. Turn MAIN POWER switch off (TM 9-2355-106-10).
6. Remove wheel chocks (TM 9-2355-106-10).

END OF TASK

END OF WORK PACKAGE

FIELD MAINTENANCE

TRAILER CONTROL VALVE REMOVAL AND INSTALLATION

INITIAL SETUP:

Tools and Special Tools
General Mechanic's Tool Kit (GMTK) (WP 0795, Item 37)
Wrench, torque, 40-200 lb-in., 3/8-inch drive (WP 0795, Item 142)

Materials/Parts
Goggles, industrial (WP 0794, Item 20)

References
TM 9-2355-106-10
TM 9-2355-106-23P
WP 0782

Equipment Condition
Parking brake set (TM 9-2355-106-10)
Transmission set in NEUTRAL (N) (TM 9-2355-106-10)
Engine off (TM 9-2355-106-10)
MAIN POWER switch off (TM 9-2355-106-10)
Wheels chocked (TM 9-2355-106-10)
Air pressure drained from all air brake reservoirs (TM 9-2355-106-10)
Steering wheel lower shroud cover removed (WP 0565)
Steering wheel removed (WP 0534)

WARNING

Wear eye protection when working on or around air systems. Air lines, fittings, and components contain air under pressure. Failure to comply may result in injury or death to personnel.

Before working on air brake system or any auxiliary pressurized system, make sure air pressure has been drained from all reservoirs. Failure to comply may result in serious injury or death to personnel.

Air drain valves are under pressure. Wear protective goggles and do not place face in front of air drain valves while draining air reservoirs. Open air drain valves slowly to release air pressure gradually. Failure to comply may result in serious injury or death to personnel.

Do not disconnect any air line or fitting until system pressure has been relieved. Hoses may whip and injure personnel, and air under pressure can penetrate skin. Failure to comply may result in serious injury or death to personnel.

Do not operate vehicle with air pressure system loss. Vehicle has reduced or no braking capability and may not stop. Failure to comply may result in damage to equipment and serious injury or death to personnel.

Let air pressure build in both tanks to 100 psi (689 kPa) before releasing the parking brake. Low air pressure may affect vehicle braking capability. Failure to comply may result in injury or death to personnel.

TRAILER CONTROL VALVE REMOVAL AND INSTALLATION - (CONTINUED)

REMOVAL

1. Disconnect GREEN supply air line (Figure 1, Item 2), GREEN delivery air line (Figure 1, Item 4), and BLACK exhaust air line (Figure 1, Item 3) from trailer control valve (Figure 1, Item 1).

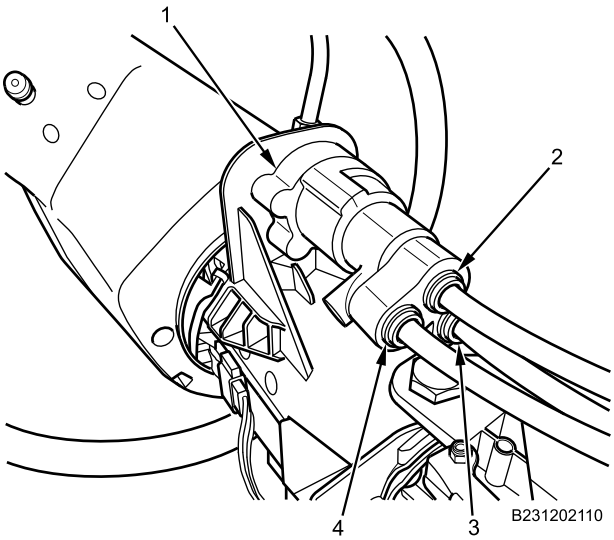

Figure 1. Trailer Control Valve Air Lines.

2. Remove trailer control valve handle screw (Figure 2, Item 1) and trailer control valve handle (Figure 2, Item 2) from trailer control valve (Figure 1, Item 1).

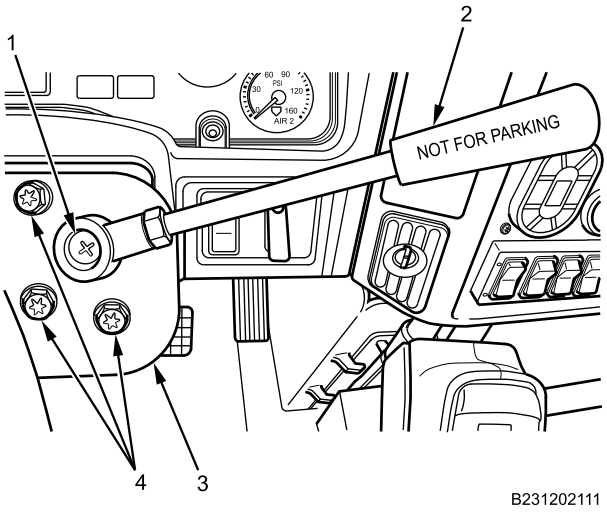

Figure 2. Trailer Control Valve Handle and Mount.

3. Remove three trailer control valve mounting screws (Figure 2, Item 4) from steering column (Figure 2, Item 3) and remove trailer control valve (Figure 1, Item 1).

END OF TASK

TRAILER CONTROL VALVE REMOVAL AND INSTALLATION - (CONTINUED)

INSTALLATION

1. Install trailer control valve (Figure 3, Item 2) on steering column (Figure 3, Item 1).

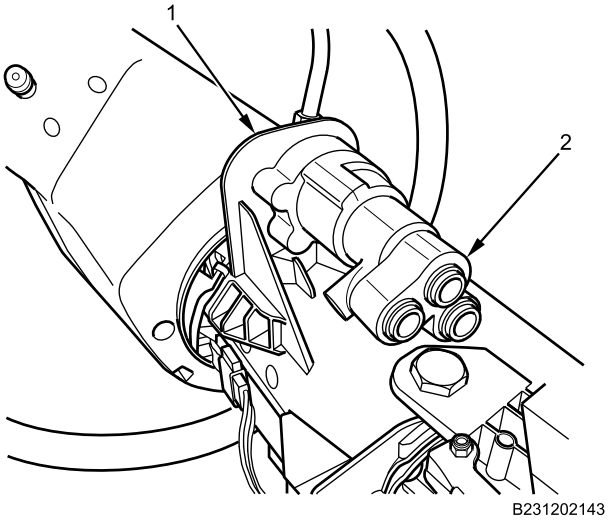

Figure 3. Trailer Control Valve.

2. Install three trailer control valve mounting screws (Figure 4, Item 4) on steering column (Figure 4, Item 3) and torque to 40-50 lb-in. (4.5-5.5 N•m).

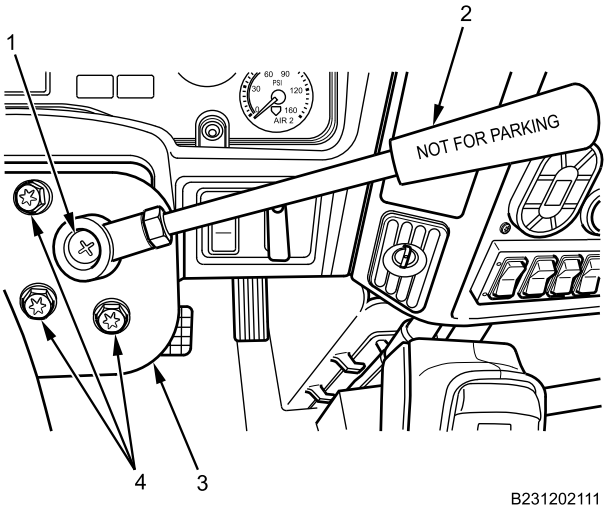

Figure 4. Trailer Control Valve Handle and Mount.

3. Install trailer control valve handle (Figure 4, Item 2) on trailer control valve with trailer control valve handle screw (Figure 4, Item 1). Tighten screw securely.

TRAILER CONTROL VALVE REMOVAL AND INSTALLATION - (CONTINUED)

4. Connect BLACK exhaust air line (Figure 5, Item 3), GREEN delivery air line (Figure 5, Item 4), and GREEN supply air line (Figure 5, Item 2) on trailer control valve (Figure 5, Item 1).

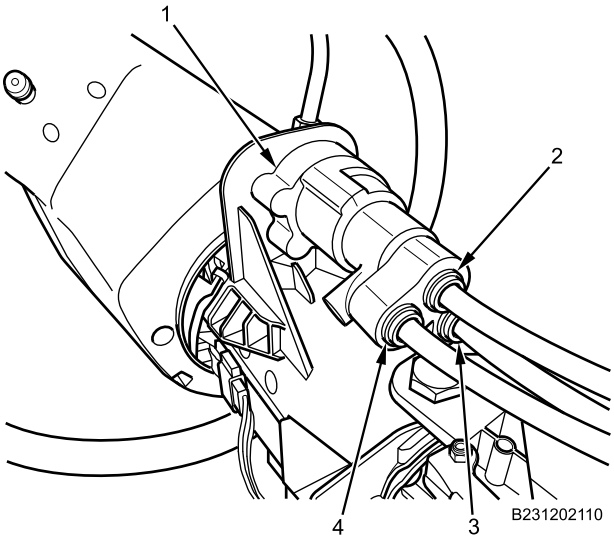

Figure 5. Trailer Control Valve Air Lines.

END OF TASK

FOLLOW-ON MAINTENANCE

1. Install steering wheel lower shroud cover (WP 0565).
2. Install steering wheel (WP 0534).
3. Turn MAIN POWER switch on (TM 9-2355-106-10).
4. Remove wheel chocks (TM 9-2355-106-10).
5. Test-drive vehicle to verify brake system operation (TM 9-2355-106-10).
6. Set transmission in NEUTRAL (N) (TM 9-2355-106-10).
7. Set vehicle parking brake (TM 9-2355-106-10).
8. Turn engine off (TM 9-2355-106-10).
9. Turn MAIN POWER switch off (TM 9-2355-106-10).

END OF TASK

END OF WORK PACKAGE

FIELD MAINTENANCE

WHEEL AND TIRE ASSEMBLY REMOVAL AND INSTALLATION

INITIAL SETUP:

Tools and Special Tools
General Mechanic's Tool Kit (GMTK) (WP 0795, Item 37)
Wrench, torque, 90-600 lb-ft, 3/4-inch drive (WP 0795, Item 144)
Socket, standard, impact, 3/4-inch drive, 6 pt, 1-5/16 inch (WP 0795, Item 112)
Socket, socket wrench, 3/4-inch drive, 12 pt, 15/16-inch (WP 0795, Item 107)
Bar, breaker, 3/4-inch drive, chrome (WP 0795, Item 13)
Jack, hydraulic, bottle, 20-ton capacity (WP 0795, Item 60)
Jackstand (10-ton), 19-28.5-inches (WP 0795, Item 62)
Lift, wheel, truck (WP 0795, Item 66)

Materials/Parts
Gloves (WP 0794, Item 18)
Goggles, industrial (WP 0794, Item 20)
Faceshield, industrial (WP 0794, Item 16)
Compound (WP 0794, Item 13)

Personnel Required
Maintainer - (2)

References
TM 9-2355-106-10
TM 9-2355-106-23P
WP 0782

Equipment Condition
Parking brake set (TM 9-2355-106-10)
Transmission set in NEUTRAL (N) (TM 9-2355-106-10)
Engine shut off (TM 9-2355-106-10)
MAIN POWER switch off (TM 9-2355-106-10)
Wheels chocked (TM 9-2355-106-10)

WARNING

Before lifting vehicle off ground, make sure it is parked on level surface. Set parking brake and chock wheels. Use hydraulic jack to lift vehicle. Do not use jack alone to support vehicle. Never work under or near a vehicle supported only by jack or lifting device. Use rated jackstands under frame rails to properly support vehicle. Do not support vehicle under front and rear axles. Use additional jackstands as necessary to support vehicle components during removal and installation procedures. Failure to comply may result in damage to equipment and serious injury or death to personnel.

Ensure vehicle is parked on hard, level surface before changing wheel and tire assembly. Soft or uneven ground may cause jack or jackstand to slip, resulting in damage to equipment and serious injury or death to personnel.

Wheel and tire assemblies are heavy. Do not attempt to lift wheel and tire assemblies without assistance from crewmember. Wear safety goggles and work gloves. Failure to comply may result in damage to equipment and serious injury or death to personnel.

Do not remove fasteners that secure the split rim. Wheel and tire assembly could burst with explosive force. Failure to comply may result in damage to equipment and serious injury or death to personnel.

WHEEL AND TIRE ASSEMBLY REMOVAL AND INSTALLATION - (CONTINUED)

REMOVAL

1. Raise and suitably support the vehicle under axle.

NOTE

It may be necessary to apply brakes to loosen lug nuts.

2. Position wheel lift under tire and wheel assembly.

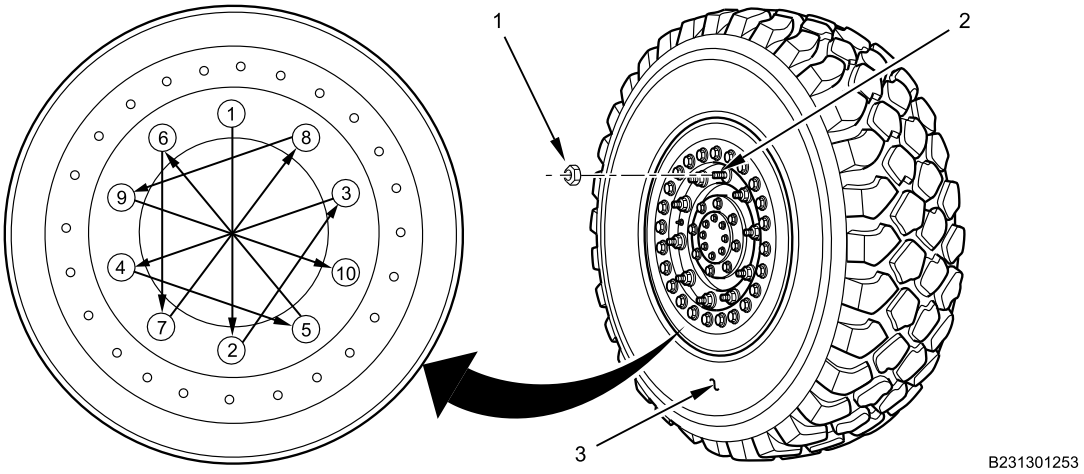

Figure 1. Wheel and Tire Assembly.

3. Remove 10 lug nuts (Figure 1, Item 1) from wheel studs (Figure 1, Item 2) in sequence as shown in illustration.
4. With assistance, remove wheel and tire assembly (Figure 1, Item 3).

WHEEL AND TIRE ASSEMBLY REMOVAL AND INSTALLATION - (CONTINUED)

NOTE

Assembly must be replaced if three or more consecutive wheel nuts are missing.

5. Inspect wheel nuts (Figure 2, Item 3) and bolts (Figure 2, Item 1) for damage or looseness. Except as noted, if bolt or nut is missing or damaged, replace as necessary.

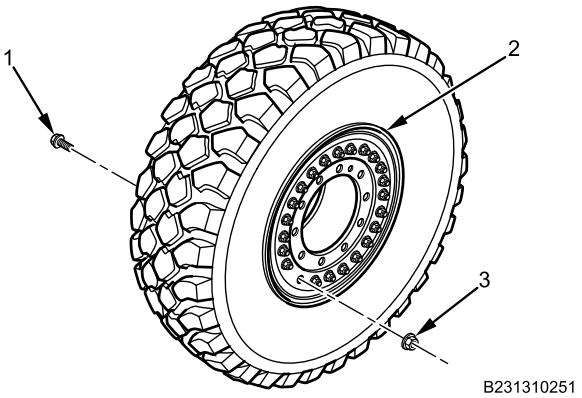

Figure 2. Wheel Nuts and Bolts.

6. If nuts and bolts are loose, inspect for damage to threads and bolt. If no damage is found, torque to 161 lb-ft (218 N•m).
7. If replacing because of damage, install new nut (Figure 2, Item 3) or new nut and new bolt on wheel assembly (Figure 2, Item 2). Torque to 161 lb-ft (218 N•m).

END OF TASK

INSTALLATION

WARNING

Corrosion preventive compound is toxic. Use only in well-ventilated area. Do not get in eyes; wear chemical safety goggles and full-face shield when using. Avoid contact with skin and wear rubber or plastic, solvent-resistant gloves. In case of contact, remove contaminated clothing and immediately wash area with soap and water. If compound contacts eyes, flush eyes with large amounts of water for at least 15 minutes and get immediate medical attention. If swallowed, do not induce vomiting; contact a physician immediately. Failure to comply may result in serious injury or death to personnel.

WHEEL AND TIRE ASSEMBLY REMOVAL AND INSTALLATION - (CONTINUED)

1. Apply corrosion preventive compound on wheel studs (Figure 3, Item 2) and lug nuts (Figure 3, Item 1).

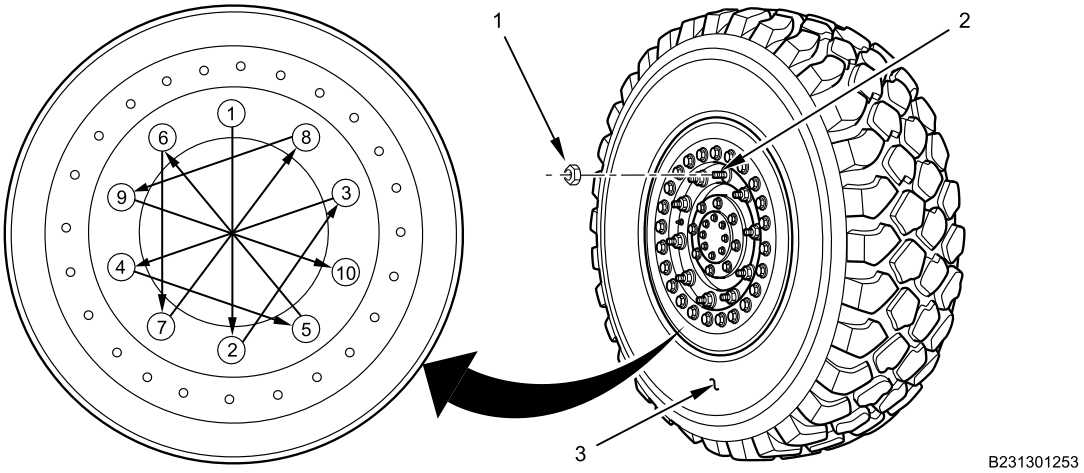

Figure 3. Wheel and Tire Assembly.

2. With assistance, align holes in wheel with wheel studs (Figure 3, Item 2) and install wheel and tire assembly (Figure 3, Item 3).

NOTE

It may be necessary to apply brakes in order to torque lug nuts.

3. Install 10 lug nuts (Figure 3, Item 1) and torque to 450-500 lb-ft (610-678 N•m) in sequence as shown in illustration.
4. Remove wheel lift from under tire and wheel assembly.
5. Lower vehicle to ground.

END OF TASK

FOLLOW-ON MAINTENANCE

1. Remove wheel chocks (TM 9-2355-106-10).

END OF TASK

END OF WORK PACKAGE

FIELD MAINTENANCE

TIE ROD REMOVAL AND INSTALLATION

INITIAL SETUP:

Tools and Special Tools
General Mechanic's Tool Kit (GMTK) (WP 0795, Item 37)
Grease gun (WP 0795, Item 41)
Puller set, mechanical (WP 0795, Item 78)
Wrench, torque, 50-250 lb-ft, 1/2-inch drive (WP 0795, Item 143)

Materials/Parts
Locknut - (2) (WP 0796, Item 11)
Cotter pin (WP 0796, Item 19)
Grease (WP 0794, Item 30)

References
TM 9-2355-106-10
TM 9-2355-106-23P
WP 0782

Equipment Condition
Parking brake set (TM 9-2355-106-10)
Transmission set in NEUTRAL (N) (TM 9-2355-106-10)
Engine shut off (TM 9-2355-106-10)
MAIN POWER switch off (TM 9-2355-106-10)
Wheels chocked (TM 9-2355-106-10)

REMOVAL

1. Remove locknut (Figure 1, Item 7) and bolt (Figure 1, Item 5) from clamp. Discard locknut .

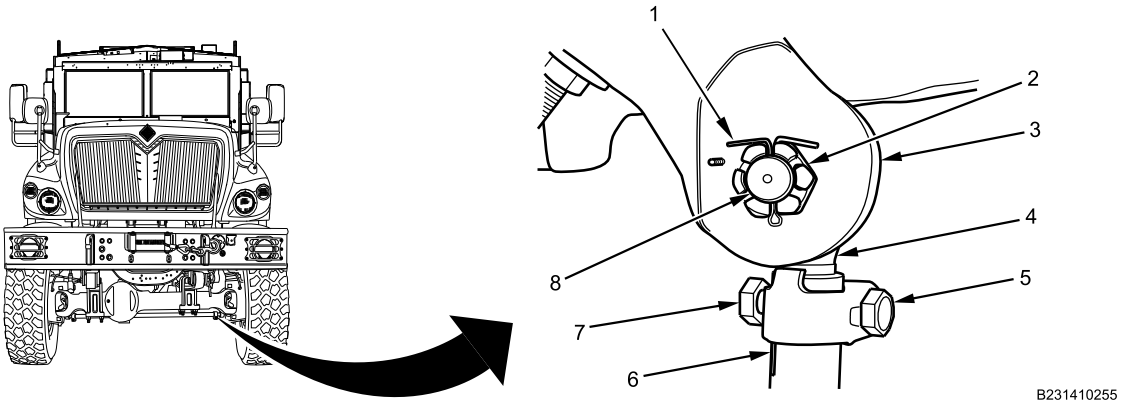

Figure 1. Tie Rod End to Knuckle. Right Shown, Left Similar.

2. Remove cotter pin (Figure 1, Item 1) and hexagon head nut (Figure 1, Item 2) from tie rod stud (Figure 1, Item 8). Discard cotter pin.
3. Separate tie rod end (Figure 1, Item 4) from steering knuckle (Figure 1, Item 3) using two-jaw puller.
4. Repeat steps 1–3 on left tie rod end.

END OF TASK

DISASSEMBLY

1. Count and record number of exposed threads of each tie rod end (Figure 1, Item 4) at cross tube (Figure 1, Item 6).
2. Unscrew tie rod ends (Figure 1, Item 4) from cross tube (Figure 1, Item 6).

END OF TASK

TIE ROD REMOVAL AND INSTALLATION - (CONTINUED)

ASSEMBLY

NOTE

Tie rods have right-hand threads on one end and left-hand threads on other end. Make sure tie rod ends are installed properly on tie rod.

Tie rod ends must be threaded into tie rod far enough to completely cover slots in tie rod.

There should be no excessive looseness or binding in threads between tie rod end and tie rod.

1. Screw tie rod ends (Figure 2, Item 4) into cross tube (Figure 2, Item 6) until same number of threads are exposed as noted during removal.

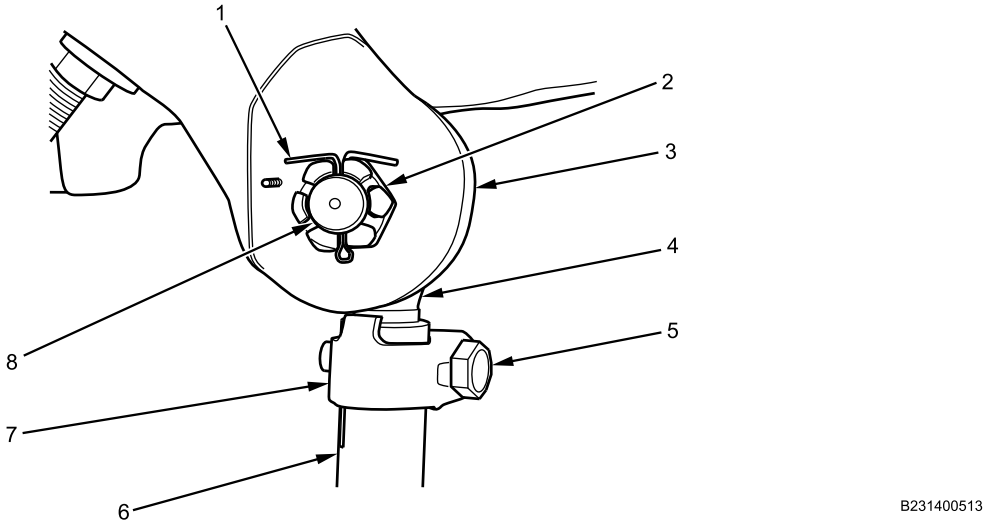

Figure 2. Tie Rod End and Knuckle.

2. Install new locknut and bolt (Figure 2, Item 5) in clamp (Figure 2, Item 7) finger-tight. Repeat on other tie rod end.

END OF TASK

TIE ROD REMOVAL AND INSTALLATION - (CONTINUED)

INSTALLATION

1. Insert tie rod end studs (Figure 2, Item 8) into each steering knuckle (Figure 2, Item 3). Install tie rod stud nuts (Figure 2, Item 2). Torque to 120-160 lb-ft (163-218 N•m) and further until cotter pin holes are aligned. Do not loosen nut to install cotter pin.

WARNING

When installing new cotter pin, tighten nut until slot appears and insert cotter pin. Never back off nut to install cotter pin. Failure to comply may result in damage to equipment, causing loss of steering control and possible injury or death to personnel.

2. Install new cotter pins (Figure 2, Item 1) in each tie rod stud (Figure 2, Item 8).
3. Check and adjust toe-in (WP 0472).

NOTE

Left tie rod end must be parallel to right tie rod end. Proper alignment will eliminate restricted movement of tie rod assembly.

4. Align tie rod ends to knuckle so they are parallel to the knuckle mounting surface as shown in Figure 3.

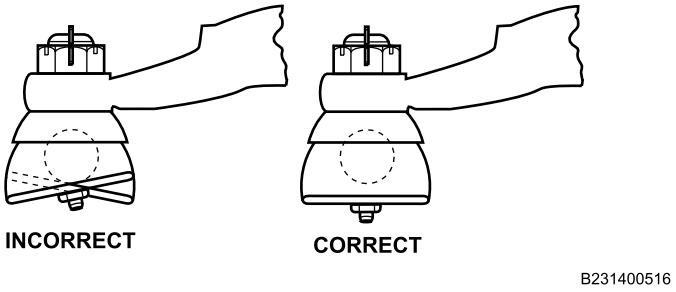

Figure 3. Tie Rod-to-Steering Knuckle Position.

TIE ROD REMOVAL AND INSTALLATION - (CONTINUED)

WARNING

Do not overtighten tie rod clamp bolt and locknut. Overtightening can cause severe binding of clamp on tie rod threads, resulting in premature failure of tie rod ends. Failure to comply may result in damage to vehicle and injury to personnel.

When repositioning tie rod clamps, ensure bolt is located on bottom of clamp or steering knuckle contact may result. Failure to comply may result in damage to equipment and serious injury or death to personnel.

NOTE

Tie rod clamps should be free to rotate around tie rod until tightened.

5. Position clamps (Figure 4, Item 1) as shown with bolt (Figure 4, Item 2) on the bottom. Ensure bent tab (Figure 4, Item 4) is contacting tie rod (Figure 4, Item 5). Torque tie rod clamp bolts to 45-65 lb-ft (61-88 N•m).

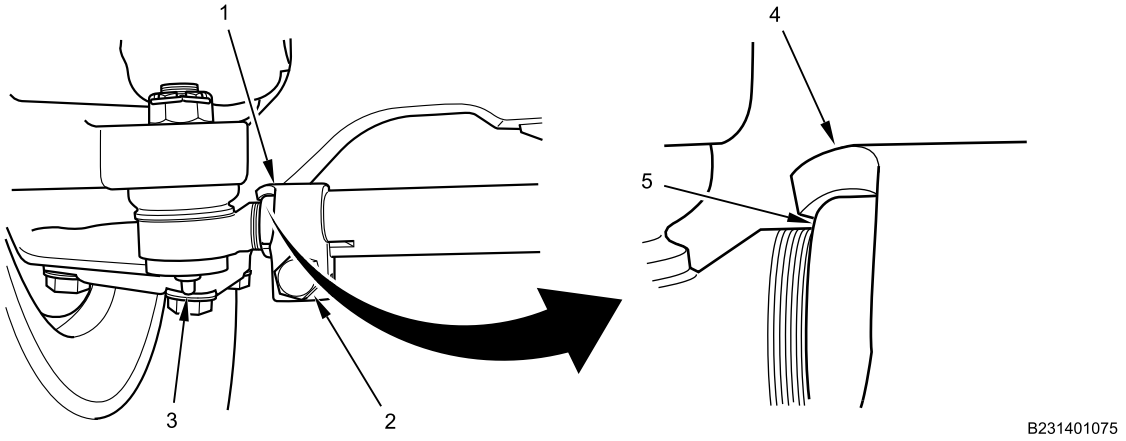

Figure 4. Tie Rod Clamp.

6. Lubricate tie rod grease fitting (Figure 4, Item 3) with grease gun.

END OF TASK

FOLLOW-ON MAINTENANCE

1. Remove wheel chocks (TM 9-2355-106-10).

END OF TASK

END OF WORK PACKAGE

FIELD MAINTENANCE

STEERING SHAFT REMOVAL AND INSTALLATION

INITIAL SETUP:

Tools and Special Tools
General Mechanic's Tool Kit (GMTK) (WP 0795, Item 37)

Materials/Parts
Gloves (WP 0794, Item 19)
Goggles, industrial (WP 0794, Item 20)
Lockbolt - (2) (WP 0796, Item 131)
Locknut - (2) (WP 0796, Item 29)

References
TM 9-2355-106-10
TM 9-2355-106-23P
WP 0782

Equipment Condition
Parking brake set (TM 9-2355-106-10)
Transmission set in NEUTRAL (N) (TM 9-2355-106-10)
Engine off (TM 9-2355-106-10)
MAIN POWER switch off (TM 9-2355-106-10)
Hood open and secure (TM 9-2355-106-10)
Left side engine armor removed (WP 0597)
Air cleaner assembly removed (WP 0257)
Driver Control Mounting (DCM) bracket assembly exterior armor removed (WP 0646)

WARNING

Engine components become extremely hot during normal operation. Allow engine to cool completely prior to performing maintenance. Use extreme care when working in close quarters in engine compartment. Stay clear of rotating parts. Wear safety goggles, work gloves, and long sleeves or shop coat. Failure to comply may result in serious injury or death to personnel.

Engine hood is extremely heavy and requires two-person lift. Ensure that there is adequate space in front of the vehicle to open hood completely without pinning or pinching personnel between hood and any other structure. Use extreme care when working under hood and make sure it is properly supported. Failure to comply may result in serious injury or death to personnel.

NOTE

Centering front wheels straight ahead before disassembly will assist in correct steering wheel position during assembly.

STEERING SHAFT REMOVAL AND INSTALLATION - (CONTINUED)

REMOVAL

1. Remove upper bolt (Figure 1, Item 4), flat washer (Figure 1, Item 3) and locknut (Figure 1, Item 1) at steering column (Figure 1, Item 2). Discard locknut and bolt.

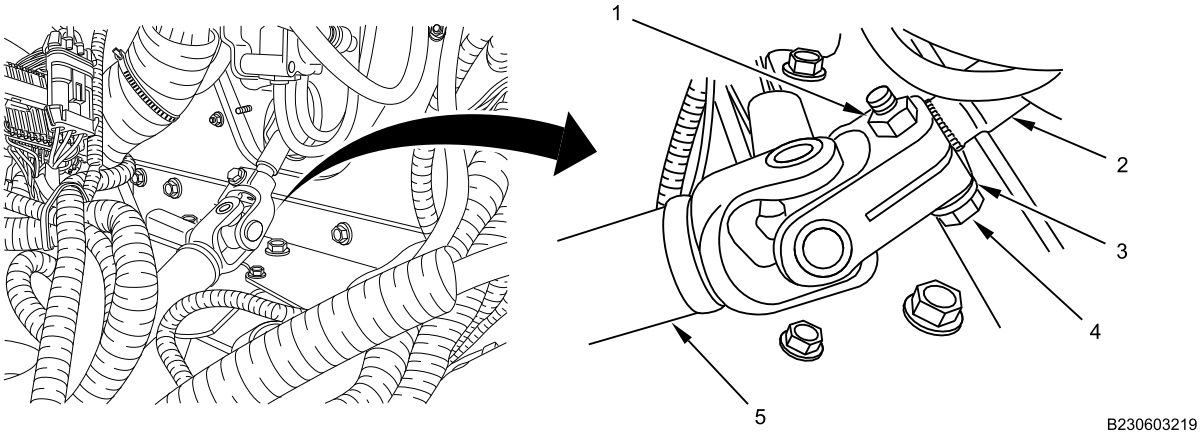

Figure 1. Steering Shaft.

2. Slide steering shaft (Figure 1, Item 5) off splined shaft of steering column (Figure 1, Item 2).

CAUTION

Do not allow steering wheel to turn when steering shaft is removed, or clock spring damage may result.

3. Remove lower bolt (Figure 2, Item 3), flat washer (Figure 2, Item 2), and locknut (Figure 2, Item 5) from steering gear (Figure 2, Item 4). Discard locknut and bolt.

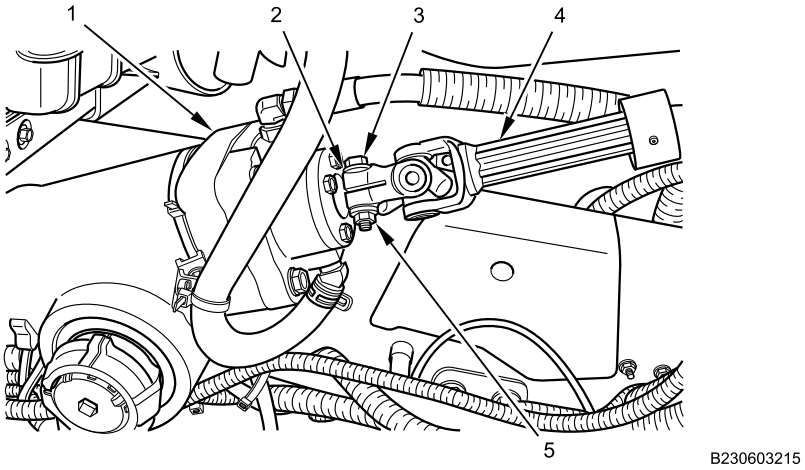

Figure 2. Steering Gear.

4. Slide steering shaft (Figure 2, Item 4) off splined shaft of steering gear (Figure 2, Item 1).

END OF TASK

STEERING SHAFT REMOVAL AND INSTALLATION - (CONTINUED)

INSTALLATION

NOTE

Steering column clamp bolt has two heads. The upper head is designed to break off from lower head when bolt reaches specifications. No torque wrench is needed.

1. Slide steering shaft (Figure 3, Item 5) on splined shaft of steering column (Figure 3, Item 2).

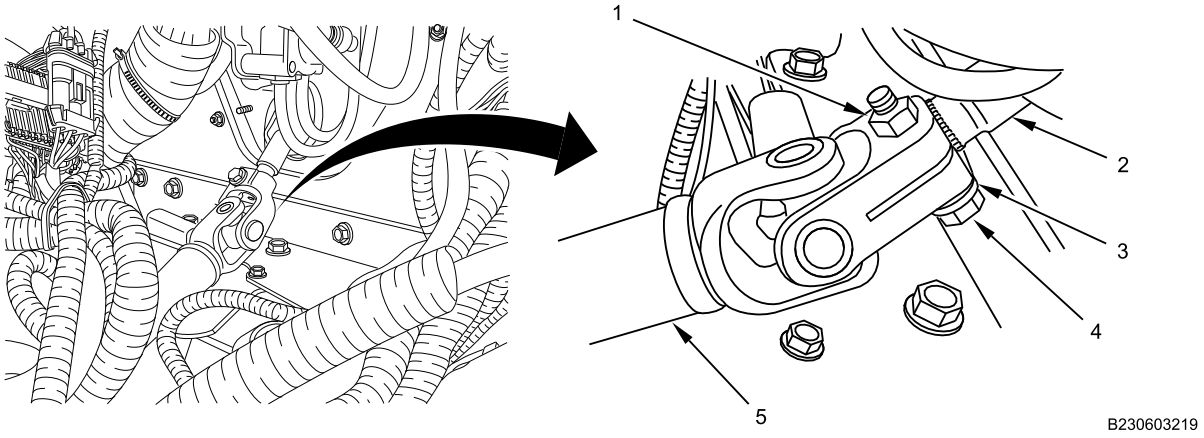

Figure 3. Steering Column End.

2. Install new bolt (Figure 3, Item 4) and washer (Figure 3, Item 3) in steering shaft (Figure 3, Item 5) at steering column (Figure 3, Item 2).
3. Install new locknut (Figure 3, Item 1). Tighten upper bolt until 7/16-in. 12-point bolt head breaks off bolt.

STEERING SHAFT REMOVAL AND INSTALLATION - (CONTINUED)

4. Slide steering shaft (Figure 4, Item 4) on splined shaft of steering gear (Figure 4, Item 1).

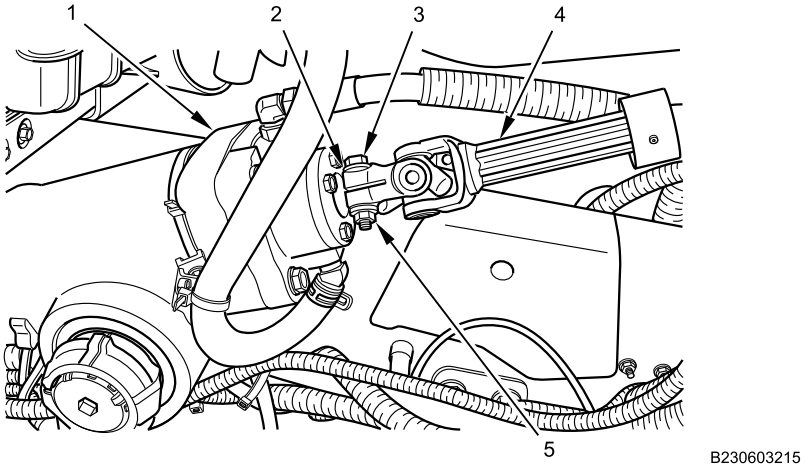

Figure 4. Steering Gear End.

5. Install new bolt (Figure 4, Item 3) and washer (Figure 4, Item 2) in steering shaft (Figure 4, Item 4).
6. Install new locknut (Figure 4, Item 5). Tighten upper bolt until 7/16 in. 12-point bolt head breaks off bolt.

END OF TASK

FOLLOW-ON MAINTENANCE

1. Install DCM bracket assembly exterior armor (WP 0646).
2. Install air cleaner assembly (WP 0257).
3. Install left side engine armor (WP 0597).
4. Remove wheel chocks (TM 9-2355-106-10).
5. Turn MAIN POWER switch on (TM 9-2355-106-10).
6. Test drive vehicle to check proper steering operation (TM 9-2355-106-10).
7. Set transmission in NEUTRAL (N) (TM 9-2355-106-10).
8. Set parking brake (TM 9-2355-106-10).
9. Turn engine off (TM 9-2355-106-10).
10. Turn MAIN POWER switch off (TM 9-2355-106-10).

END OF TASK

END OF WORK PACKAGE

FIELD MAINTENANCE

STEERING COLUMN REMOVAL AND INSTALLATION

INITIAL SETUP:

Tools and Special Tools
General Mechanic's Tool Kit (GMTK) (WP 0795, Item 37)
Wrench, torque, 20-100 lb-ft, 3/8-inch drive (WP 0795, Item 141)
Wrench, torque, 40-200 lb-in., 3/8-inch drive (WP 0795, Item 142)

Materials/Parts
Locknut (WP 0796, Item 29)
Flange head bolt (WP 0796, Item 131)
Steering column gasket (WP 0796, Item 112)

References
TM 9-2355-106-10
TM 9-2355-106-23P
WP 0782

Equipment Condition
Parking brake set (TM 9-2355-106-10)
Transmission set in NEUTRAL (N) (TM 9-2355-106-10)
Engine off (TM 9-2355-106-10)
MAIN POWER switch off (TM 9-2355-106-10)
Wheels chocked (TM 9-2355-106-10)
Air cleaner assembly removed (WP 0257)
Driver Control Mounting (DCM) bracket removed (WP 0646)
Steering wheel lower shroud cover removed (WP 0565)
Steering wheel and clock spring removed (WP 0534)

REMOVAL

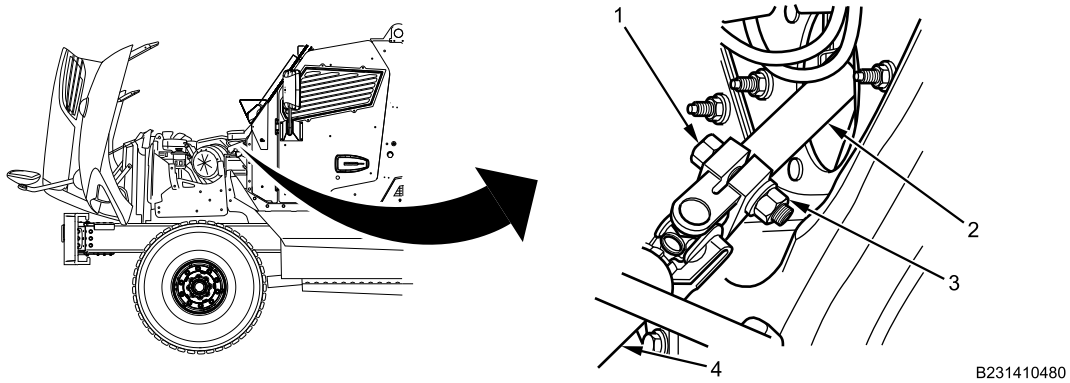

Figure 1. Steering Shaft at Column.

NOTE

Centering front wheels to straight-ahead position before steering wheel removal will assist in correct positioning of steering wheel during installation.

1. Remove and discard flange head bolt (Figure 1, Item 1) and locknut (Figure 1, Item 3) from steering shaft (Figure 1, Item 4) at steering column (Figure 1, Item 2).

STEERING COLUMN REMOVAL AND INSTALLATION - (CONTINUED)

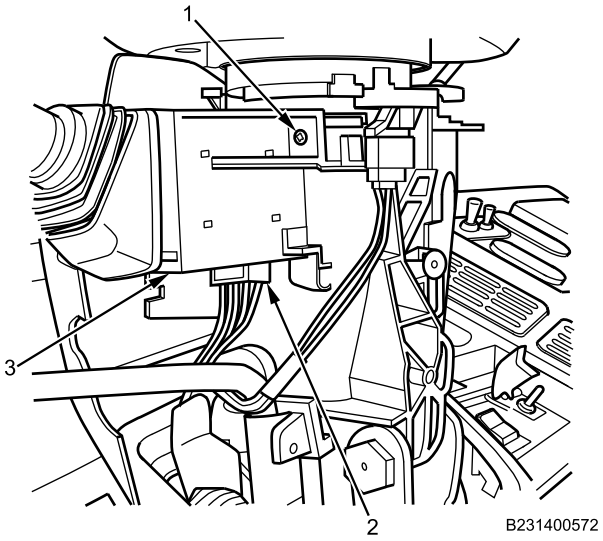

Figure 2. Turn Signal Switch, Lower.

2. Disconnect electrical connector (Figure 2, Item 2) and lower mounting screw (Figure 2, Item 1) on turn signal switch (Figure 2, Item 3).

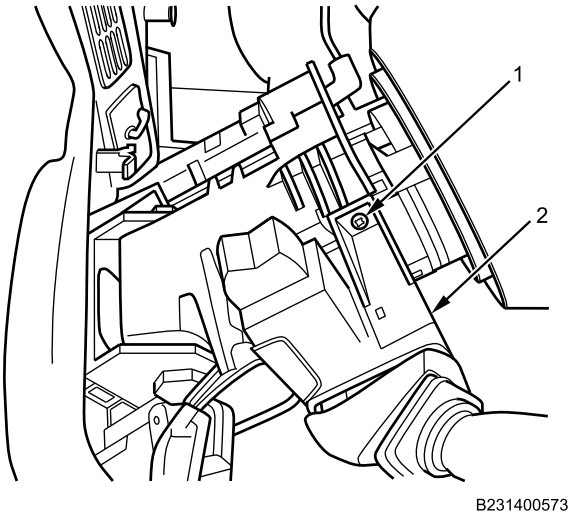

Figure 3. Turn Signal Switch, Upper.

3. Remove upper turn signal switch mounting screw (Figure 3, Item 1) and remove switch (Figure 3, Item 2).

STEERING COLUMN REMOVAL AND INSTALLATION - (CONTINUED)

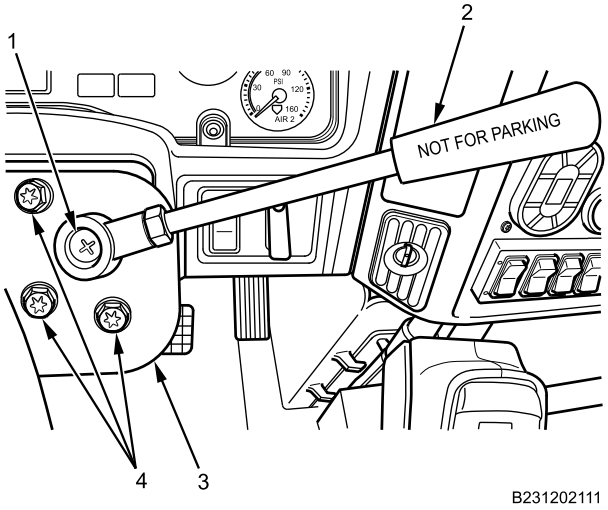

Figure 4. Trailer Brake Control Valve.

4. Remove screw (Figure 4, Item 1) securing trailer brake control valve handle (Figure 4, Item 2).
5. Remove three trailer brake control valve retaining screws (Figure 4, Item 4) and air brake control valve (Figure 4, Item 3).

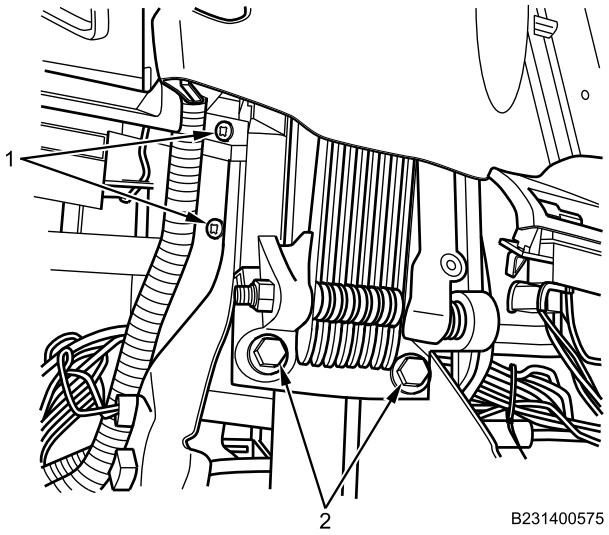

Figure 5. Steering Column.

6. Remove two cross-cab beam bolts (Figure 5, Item 2) that secure steering column to cab beam.
7. Remove four Torx screws (Figure 5, Item 1) at upper steering bracket. Left side shown. Right side similar.

STEERING COLUMN REMOVAL AND INSTALLATION - (CONTINUED)

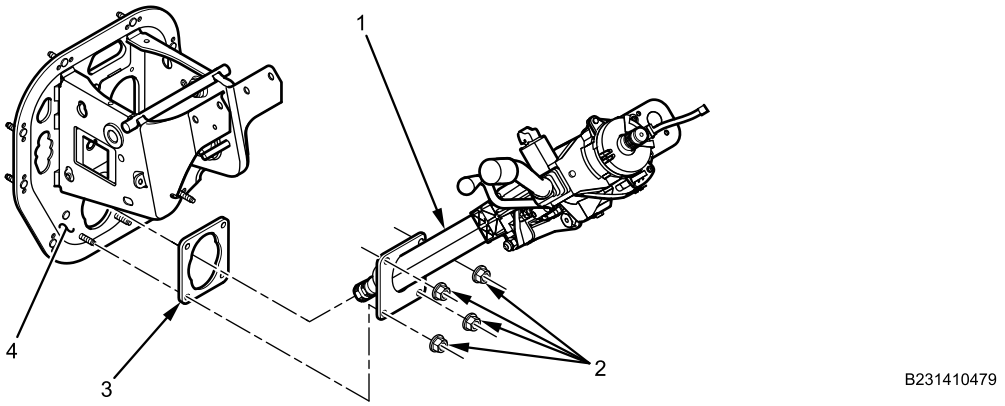

Figure 6. Lower Steering Column.

8. Remove four flange nuts (Figure 6, Item 2) at bottom of steering column (Figure 6, Item 1).
9. Lift steering column (Figure 6, Item 1) up and towards driver seat to disengage splines at steering shaft.
10. Remove and discard gasket (Figure 6, Item 3) at steering column bracket (Figure 6, Item 4).

END OF TASK

INSTALLATION

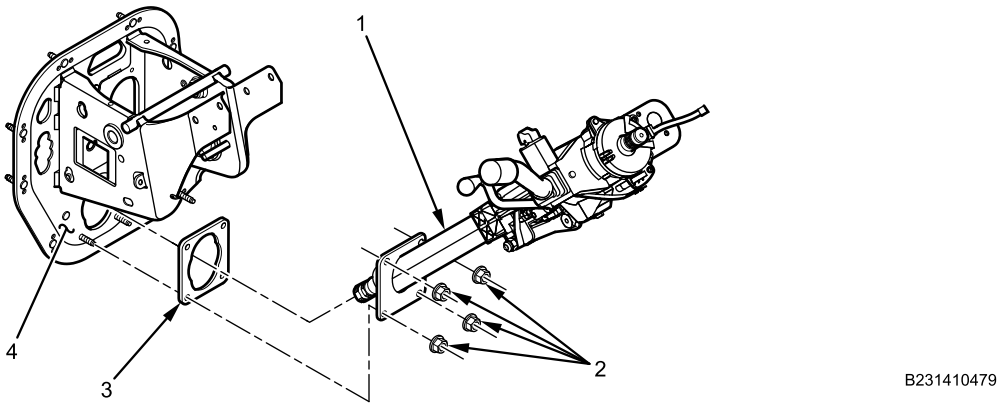

Figure 7. Lower Steering Column.

CAUTION

Use caution when aligning splines on steering column to steering shaft. Do not pound or apply heat to steering column or steering shaft. Never weld steering column or steering shaft. Never weld steering column or steering shaft. Failure to comply may result in damage to equipment.

1. Install new gasket (Figure 7, Item 3) at base of steering column (Figure 7, Item 1).
2. Align splines on steering column (Figure 7, Item 1) with steering shaft and install steering column bottom on steering bracket (Figure 7, Item 4).
3. Loosely install four flange nuts (Figure 7, Item 2) at bottom of steering column (Figure 7, Item 1).

STEERING COLUMN REMOVAL AND INSTALLATION - (CONTINUED)

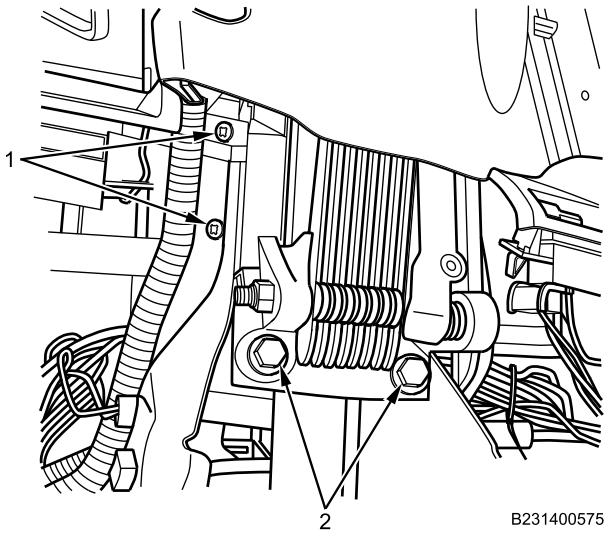

Figure 8. Steering Column.

4. Loosely install four Torx screws (Figure 8, Item 1) at upper steering bracket. Left shown; Right similar.
5. Install two cross-cab beam mounting bolts (Figure 8, Item 2) and torque to 190-200 lb-in. (21-22 N•m).
6. Torque four flange nuts (Figure 8, Item 2) at bottom of steering column (Figure 8, Item 1) to 200-240 lb-in. (22-27 N•m) and four Torx screws (Figure 8, Item 1) at upper steering bracket to 230-250 lb-in. (25-28 N•m).

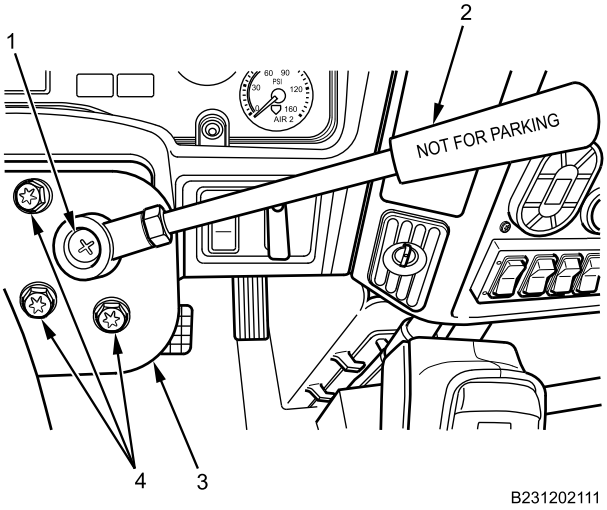

Figure 9. Trailer Brake Control Valve.

7. Install trailer brake control valve (Figure 9, Item 3) with three mounting screws (Figure 9, Item 4) and torque to 30-40 lb-in. (3-4.5 N•m).
8. Install trailer brake control valve handle (Figure 9, Item 2) with screw (Figure 9, Item 1) and tighten securely.

STEERING COLUMN REMOVAL AND INSTALLATION - (CONTINUED)

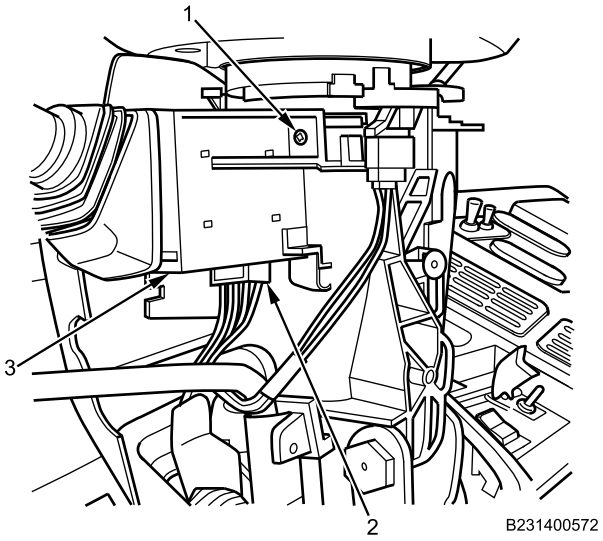

Figure 10. Turn Signal Switch, Lower.

9. Connect electrical connector (Figure 10, Item 2), position and align turn signal switch (Figure 10, Item 3), and install lower mounting screw (Figure 10, Item 1).

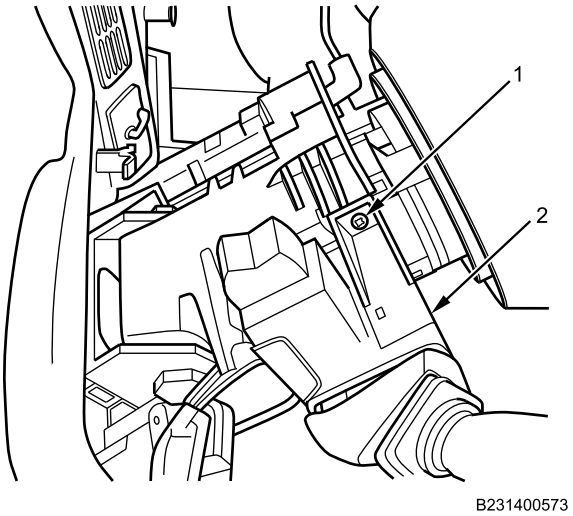

Figure 11. Turn Signal Switch, Upper.

10. Install upper turn signal switch mounting screw (Figure 11, Item 1) into turn signal switch (Figure 11, Item 2).

STEERING COLUMN REMOVAL AND INSTALLATION - (CONTINUED)

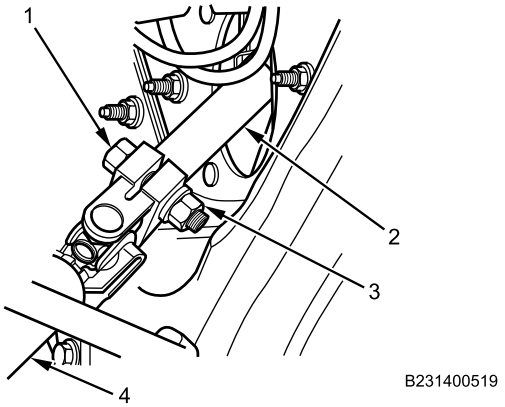

Figure 12. Steering Shaft.

NOTE

Steering column clamp bolt has two heads. The upper head is designed to break off from lower head when bolt reaches specifications. No torque wrench is needed.

11. Install new flange head bolt with washer, (Figure 12, Item 1) and new locknut (Figure 12, Item 3) in steering shaft (Figure 12, Item 4) at steering column (Figure 12, Item 2). Tighten upper flange head bolt until 7/16-in. 12-point bolt head breaks off bolt.

END OF TASK

FOLLOW-ON MAINTENANCE

1. Install steering wheel and clock spring (WP 0534).
2. Install steering wheel lower shroud cover (WP 0565).
3. Install DCM bracket (WP 0646).
4. Install air cleaner assembly (WP 0257).
5. Turn MAIN POWER switch on (TM 9-2355-106-10).
6. Start engine (TM 9-2355-106-10).
7. Remove wheel chocks (TM 9-2355-106-10).
8. Test drive to verify proper steering operation.
9. Set parking brake (TM 9-2355-106-10).
10. Set transmission in NEUTRAL (N) (TM 9-2355-106-10).
11. Turn engine off (TM 9-2355-106-10).
12. Turn MAIN POWER switch off (TM 9-2355-106-10).

END OF TASK

END OF WORK PACKAGE

FIELD MAINTENANCE

STEERING WHEEL AND CLOCK SPRING REMOVAL AND INSTALLATION

INITIAL SETUP:

Tools and Special Tools
General Mechanic's Tool Kit (GMTK) (WP 0795, Item 37)
Puller, mechanical, steering wheel, 4 5/8-inch spread (WP 0795, Item 79)
Wrench, torque, 20-100 lb-ft, 3/8-inch drive (WP 0795, Item 141)

Materials/Parts
Grease (WP 0794, Item 22)
Tape (WP 0794, Item 52)

References
TM 9-2355-106-10
TM 9-2355-106-23P
WP 0786
WP 0782

Equipment Condition
Parking brake set (TM 9-2355-106-10)
Transmission set in NEUTRAL (N) (TM 9-2355-106-10)
Engine off (TM 9-2355-106-10)
MAIN POWER switch off (TM 9-2355-106-10)
Wheels chocked (TM 9-2355-106-10)
Steering column covers removed (WP 0565)
Horn button removed (WP 0403)

REMOVAL

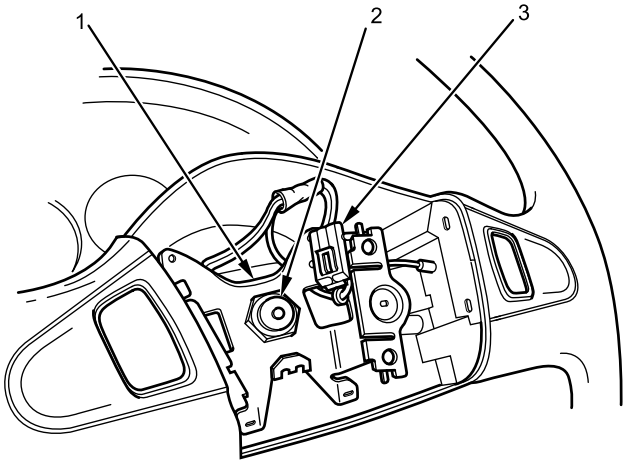

B231401343

Figure 1. Steering Wheel with Horn Button Removed.

NOTE

Centering front wheels straight ahead before steering wheel removal will assist in correct steering wheel and clock spring positioning during installation.

1. Disconnect steering wheel wiring harness (Figure 1, Item 3).
2. Remove nut (Figure 1, Item 2) from steering wheel (Figure 1, Item 1).

STEERING WHEEL AND CLOCK SPRING REMOVAL AND INSTALLATION - (CONTINUED)

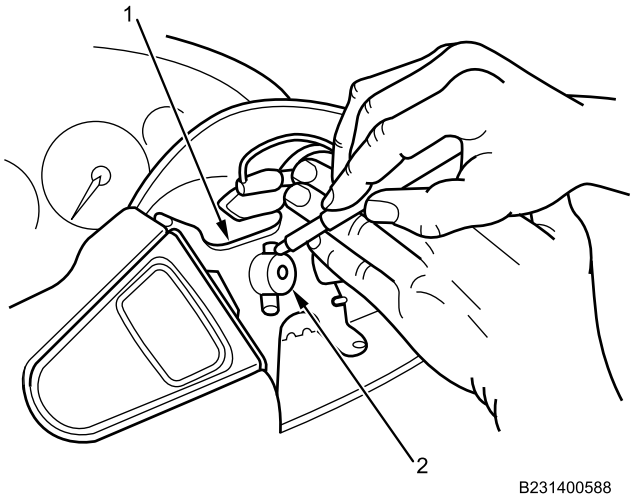

Figure 2. Steering Wheel and Shaft.

3. Make alignment marks on steering wheel (Figure 2, Item 1) and steering column shaft (Figure 2, Item 2) to aid in assembly.

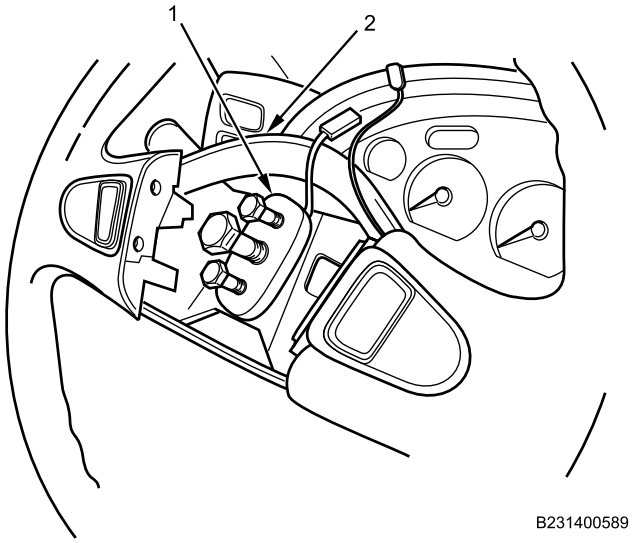

Figure 3. Steering Wheel Puller.

4. Remove steering wheel (Figure 3, Item 2) with steering wheel puller (Figure 3, Item 1).

STEERING WHEEL AND CLOCK SPRING REMOVAL AND INSTALLATION - (CONTINUED)

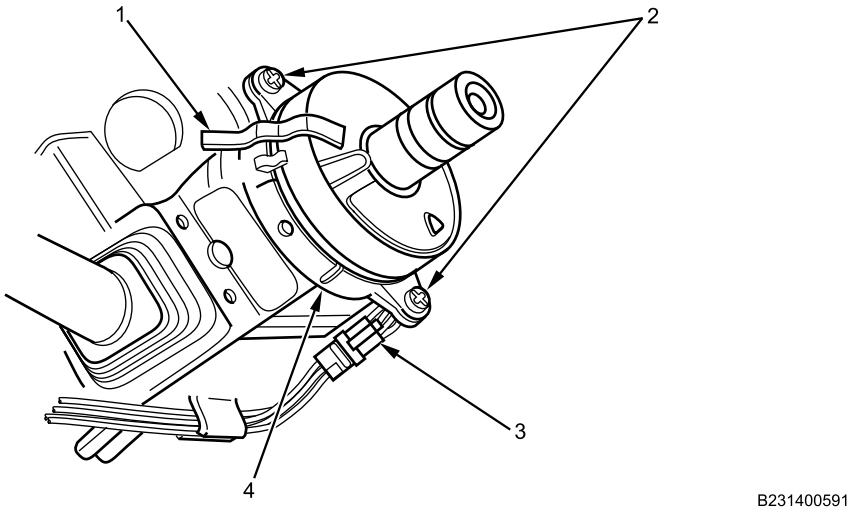

Figure 4. Clock Spring.

5. Apply tape (Figure 4, Item 1) over both halves of clock spring (Figure 4, Item 4) to prevent rotation on removal.
6. Remove three clock spring retaining screws (Figure 4, Item 2) (one hidden).
7. Disconnect lower clock spring wiring harness connector (Figure 4, Item 3) and clock spring (Figure 4, Item 4) from steering column.

END OF TASK

STEERING WHEEL AND CLOCK SPRING REMOVAL AND INSTALLATION - (CONTINUED)

INSTALLATION

CAUTION

If clock spring has rotated from center position, it must be centered before installation. Clock spring must be able to complete seven turns from lock to lock of steering wheel without binding, or damage to clock spring may occur.

1. Center clock spring by rotating clockwise until first point of binding is reached. Then rotate counterclockwise three and one-half turns and continue counterclockwise until centering marks (Figure 5, Item 1) align. Ensure that clock spring has seven full turns lock to lock without binding.

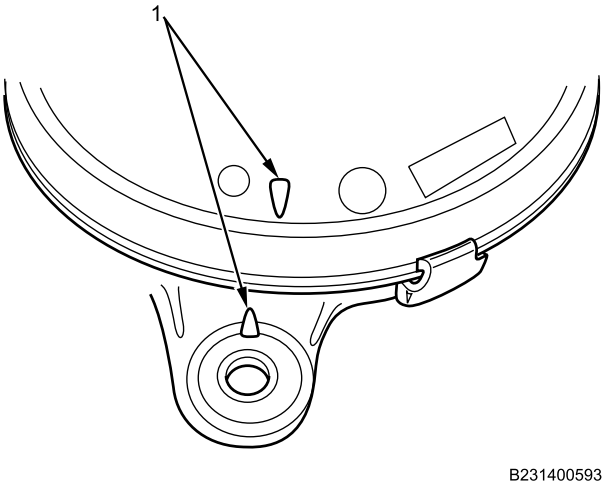

Figure 5. Clock Spring Timing.

2. Apply tape across halves of clock spring to prevent rotation once clock spring is centered.

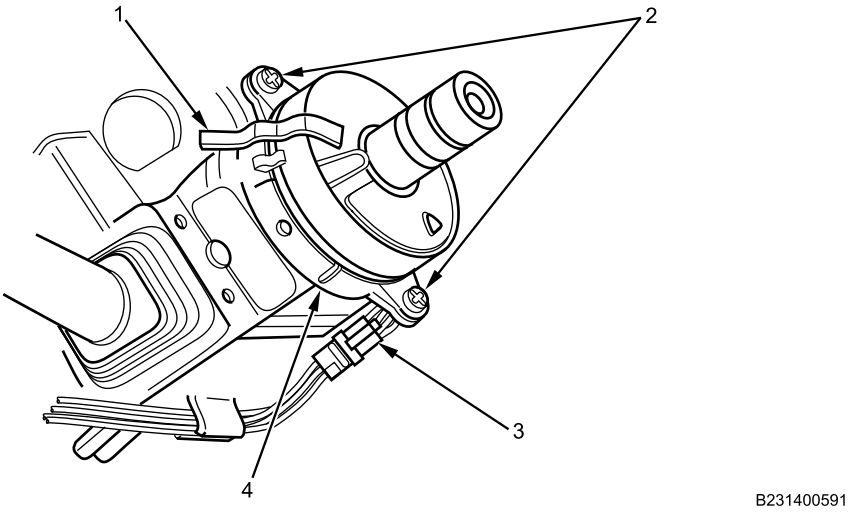

Figure 6. Clock Spring.

3. Install clock spring (Figure 6, Item 4) on steering column with three mounting screws (Figure 6, Item 2) and tighten securely.

STEERING WHEEL AND CLOCK SPRING REMOVAL AND INSTALLATION - (CONTINUED)

WARNING

Dielectric grease is harmful to skin and eyes. If grease contacts eyes, rinse thoroughly and contact physician if irritation persists. If skin is contacted, wash thoroughly with soap and water. Failure to comply may result in serious injury to personnel.

4. Apply dielectric grease to connector ends (Figure 6, Item 3). Connect lower clock spring wiring harness connector.
5. Remove tape (Figure 6, Item 1) from clock spring (Figure 6, Item 4).

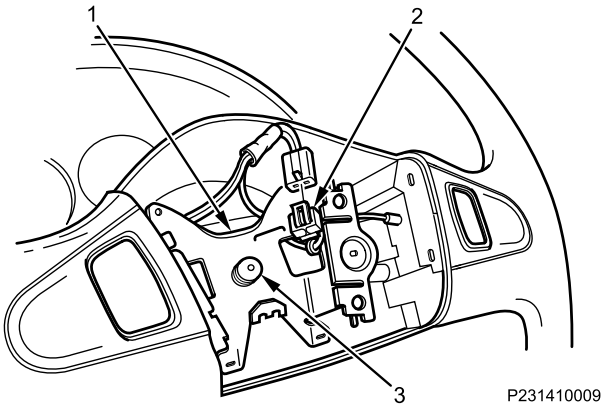

Figure 7. Steering Wheel and Shaft.

6. Put connector (Figure 7, Item 2) through steering wheel (Figure 7, Item 1).
7. Position steering wheel (Figure 7, Item 1) on steering column shaft (Figure 7, Item 3).

STEERING WHEEL AND CLOCK SPRING REMOVAL AND INSTALLATION - (CONTINUED)

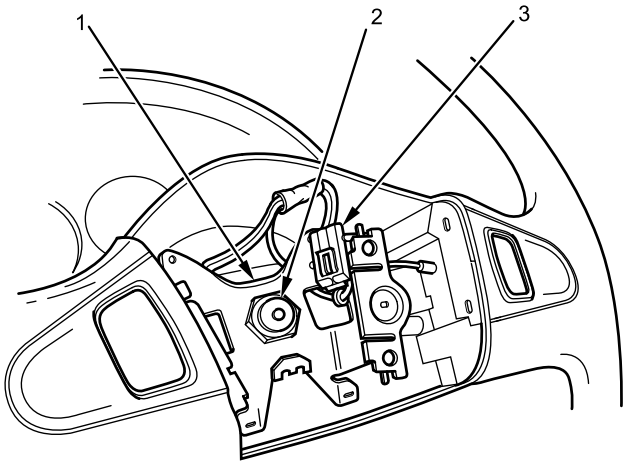

B231401343

Figure 8. Steering Wheel with Horn Button Removed.

8. Install steering wheel nut (Figure 8, Item 2) on steering wheel (Figure 8, Item 1) and torque to 55-60 lb-ft (75-81 N•m).
9. Connect steering wheel wiring harness (Figure 8, Item 3).

END OF TASK

FOLLOW-ON MAINTENANCE

1. Install steering column covers (WP 0565).
2. Install horn button (WP 0403).
3. Turn on MAIN POWER switch (TM 9-2355-106-10).
4. Remove wheel chocks (TM 9-2355-106-10).
5. Start engine (TM 9-2355-106-10).
6. Test drive to verify proper steering operation (TM 9-2355-106-10).
7. Set parking brake (TM 9-2355-106-10).
8. Set transmission in NEUTRAL (N) (TM 9-2355-106-10).
9. Turn engine off (TM 9-2355-106-10).
10. Turn MAIN POWER switch off (TM 9-2355-106-10).

END OF TASK

END OF WORK PACKAGE

FIELD MAINTENANCE

PITMAN ARM REMOVAL AND INSTALLATION

INITIAL SETUP:

Tools and Special Tools

General Mechanic's Tool Kit (GMTK) (WP 0795, Item 37)
Bar, breaker, 3/4-inch drive, chrome (WP 0795, Item 13)
Socket, hex, 3/4-inch drive, 3/4 inch (WP 0795, Item 103)
Puller set, mechanical (WP 0795, Item 78)
Puller, pitman arm (WP 0795, Item 80)
Wrench, torque, 90-600 lb-ft, 3/4-inch drive (WP 0795, Item 144)
Socket, standard, impact, 3/4-inch drive, 6 pt, 1-5/16 inch (WP 0795, Item 112)
Torque multiplier (WP 0795, Item 74)
Punch, 3/8 inch, 3/16 inch pt (WP 0795, Item 81)

Materials/Parts

Antisieze compound (WP 0794, Item 6)
Cotter pin (WP 0796, Item 19)
Pitman arm retainer kit (WP 0796, Item 110)
Gloves (WP 0794, Item 18)

References

TM 9-2355-106-10
TM 9-2355-106-23P
WP 0782

Equipment Condition

Parking brake set (TM 9-2355-106-10)
Transmission set in NEUTRAL (N) (TM 9-2355-106-10)
Engine off (TM 9-2355-106-10)
MAIN POWER switch off (TM 9-2355-106-10)
Wheels chocked (TM 9-2355-106-10)

REMOVAL

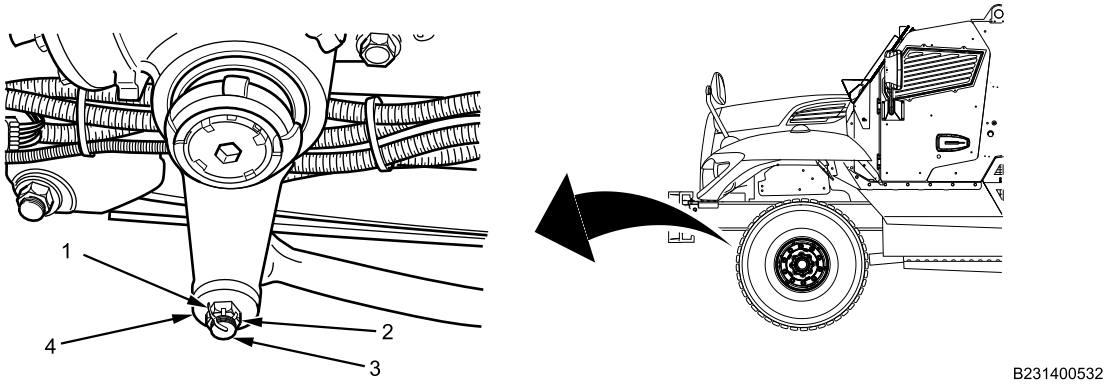

Figure 1. Pitman Arm and Drag Link.

1. Remove cotter pin (Figure 1, Item 1) and hex nut (Figure 1, Item 2) from drag link stud (Figure 1, Item 3) at end of pitman arm (Figure 1, Item 4). Discard cotter pin.
2. Remove drag link stud (Figure 1, Item 3) from pitman arm, (Figure 1, Item 4) using mechanical puller set and hammer.

PITMAN ARM REMOVAL AND INSTALLATION - (CONTINUED)

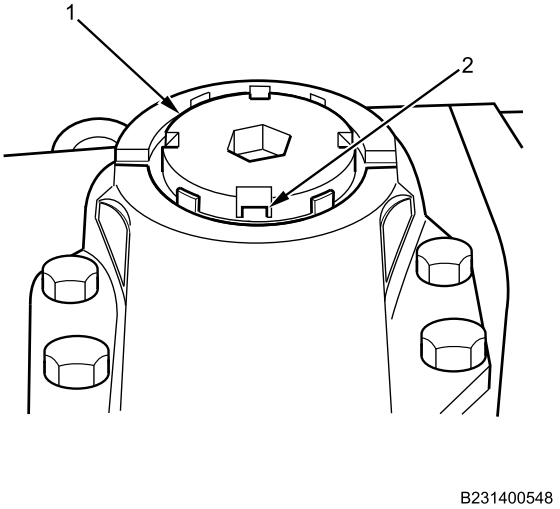

Figure 2. Pitman Arm Retainer.

3. Use a small punch and hammer to bend retaining tabs (Figure 2, Item 2) out of retainer (Figure 2, Item 1).

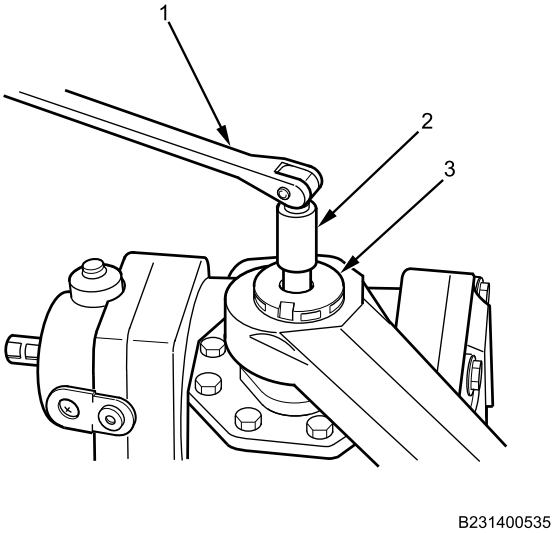

Figure 3. Pitman Arm Retainer Removal.

4. Remove retainer (Figure 3, Item 3), using hex-socket driver (Figure 3, Item 2) and breaker bar (Figure 3, Item 1).

PITMAN ARM REMOVAL AND INSTALLATION - (CONTINUED)

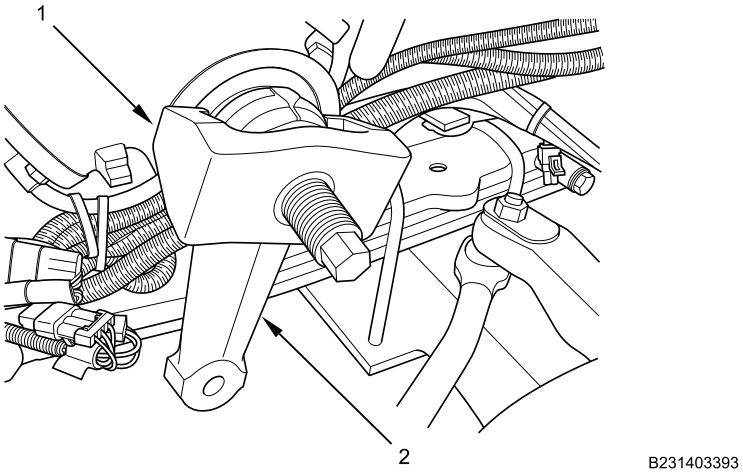

Figure 4. Pitman Arm Puller.

WARNING

Pitman arm will be extremely tight. Do not pound on pitman arm or apply heat to pitman arm or sector shaft. Never weld pitman arm or sector shaft. Failure to comply may result in damage to equipment, causing loss of steering control, and possible injury or death to personnel.

Antiseize compound can cause skin, eye, and respiratory irritation. Inhalation can cause difficulty breathing, dizziness, headache, and nausea. Wear eye protection and use only with adequate ventilation. Do not use near heat, sparks, or open flame. Wash hands and eyes after using compound. In case of skin contact, wash affected area with soap and water, and seek medical attention if irritation persists. If compound contacts eyes, flush eyes with water for at least 15 minutes, and obtain medical attention if irritation persists. In case of accidental ingestion, do not induce vomiting. Slowly drink 1-2 glasses of water or milk, and seek medical attention. Store compound in a closed container away from heat. Dispose of it in accordance with standard operating procedures. Failure to comply may result in injury to personnel.

CAUTION

Do not attempt to remove pitman arm by using a wedge between pitman arm and steering gearbox. Steering gearbox housing damage will result.

5. Lubricate threads of pitman arm puller (Figure 4, Item 1) with antisieze compound.
6. Slide pitman arm puller (Figure 4, Item 1) over pitman arm (Figure 4, Item 2).
7. Remove pitman arm (Figure 4, Item 2).

END OF TASK

PITMAN ARM REMOVAL AND INSTALLATION - (CONTINUED)

INSTALLATION

WARNING

Proper installation of pitman arm is critical to vehicle safety. Install pitman arm after steering gear is mounted on vehicle so proper torque can be applied to pitman arm. Otherwise, pitman arm could loosen and cause loss of vehicle control. If pitman arm is loose, replace pitman arm and sector shaft. Always use a new pitman arm retainer. If tabs on retainer and notches on pitman arm do not line up, tighten beyond specified torque value until two tabs align. Never back off retainer to align retaining tabs. Failure to comply may result in damage to equipment, causing loss of steering control, and possible injury or death to personnel.

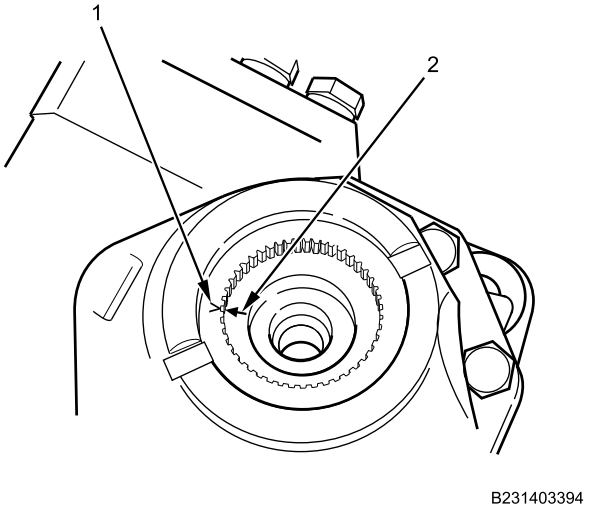

Figure 5. Pitman Arm and Sector Shaft.

1. Align timing marks on pitman arm (Figure 5, Item 1) with timing marks on sector shaft (Figure 5, Item 2) and install pitman arm.

PITMAN ARM REMOVAL AND INSTALLATION - (CONTINUED)

NOTE

Pitman arm retainers are supplied as a kit with three torque specifications: M-80 – 225 lb-ft (305 N•m); M-90 and M-100 – 350 lb-ft (475 N•m); or M-110 – 450 lb-ft (601 N•m). Torque value is stamped on face of retainer. Check torque value stamped on original retainer to ensure correct retainer is used before installing.

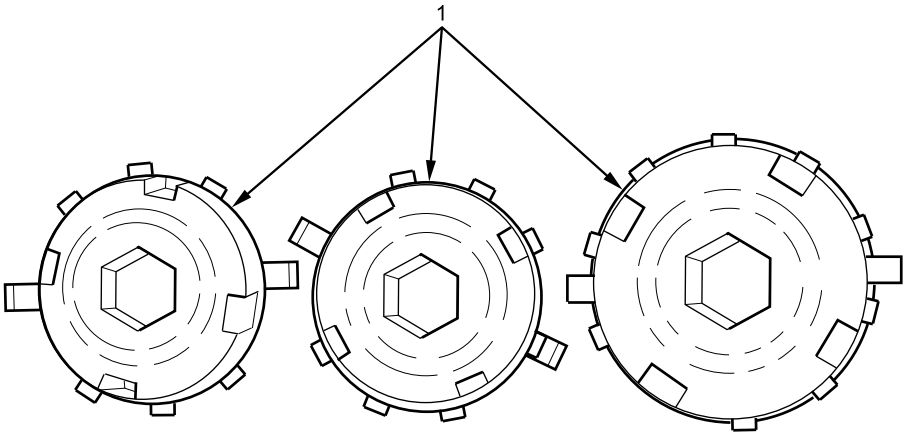

B231400541

Figure 6. Pitman Arm Retainer Kit.

3. Select correct pitman arm retainer (Figure 6, Item 1) from kit.

PITMAN ARM REMOVAL AND INSTALLATION - (CONTINUED)

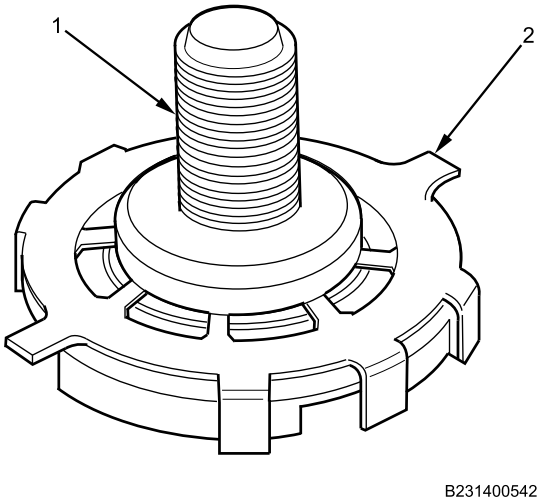

Figure 7. Pitman Arm Retainer.

WARNING

Antiseize compound can cause skin, eye, and respiratory irritation. Inhalation can cause difficulty breathing, dizziness, headache, and nausea. Wear eye protection and use only with adequate ventilation. Do not use near heat, sparks, or open flame. Wash hands and eyes after using compound. In case of skin contact, wash affected area with soap and water, and seek medical attention if irritation persists. If compound contacts eyes, flush eyes with water for at least 15 minutes, and obtain medical attention if irritation persists. In case of accidental ingestion, do not induce vomiting. Slowly drink 1-2 glasses of water or milk, and seek medical attention. Store compound in a closed container away from heat. Dispose of it in accordance with standard operating procedures. Failure to comply may result in injury to personnel.

4. Apply antisieze compound to retainer threads (Figure 7, Item 1) and both sides of retainer washer (Figure 7, Item 2). Install retainer by hand.

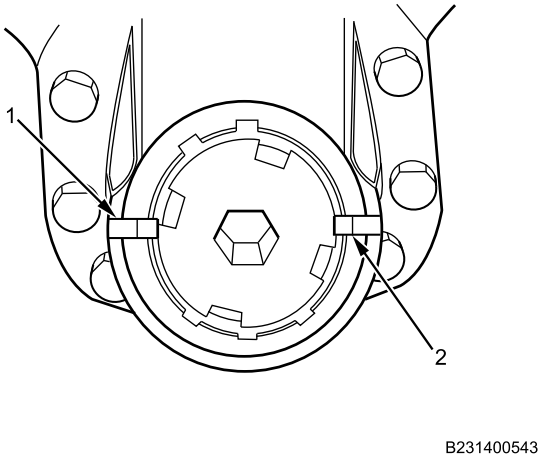

Figure 8. Pitman Arm and Retainer.

PITMAN ARM REMOVAL AND INSTALLATION - (CONTINUED)

5. Align tabs on retainer (Figure 8, Item 2) with notches in pitman arm (Figure 8, Item 1).

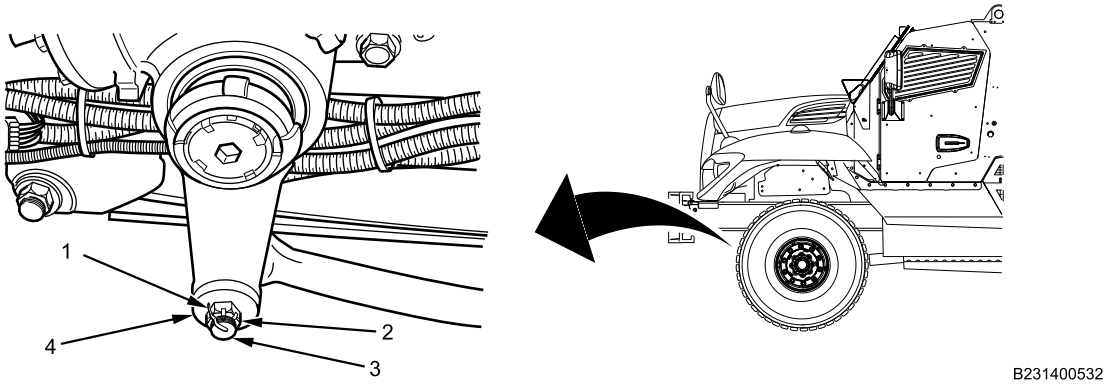

Figure 9. Pitman Arm and Drag Link.

6. Install drag link stud (Figure 9, Item 3) into pitman arm (Figure 9, Item 4) and torque hex nut (Figure 9, Item 2) to specification: stud size 3/4 inch – 85-105 lb-ft (116-143 N•m); stud size 7/8 inch – 120-160 lb-ft (163-218 N•m).

WARNING

When installing new cotter pin, tighten nut until slot appears and insert cotter pin. Never back off nut to install cotter pin. Failure to comply may result in damage to equipment, causing loss of steering control and possible injury or death to personnel.

7. Install new cotter pin (Figure 9, Item 1) into drag link stud (Figure 9, Item 3).

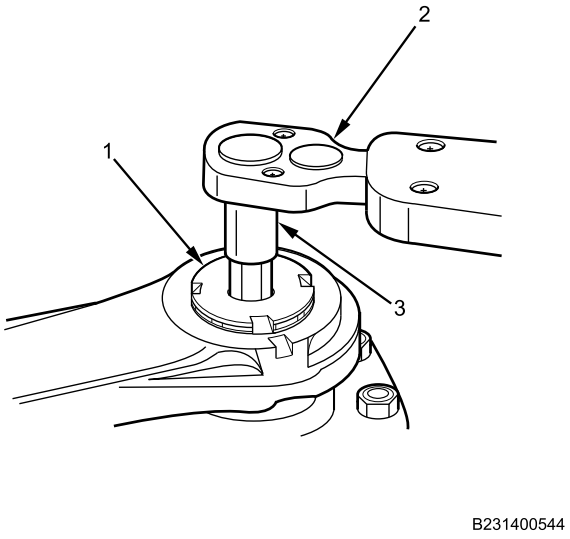

Figure 10. Tightening Retainer.

8. Tighten retainer (Figure 10, Item 1) to value stamped on face, using hex-socket driver (Figure 10, Item 3) and torque wrench (Figure 10, Item 2).

PITMAN ARM REMOVAL AND INSTALLATION - (CONTINUED)

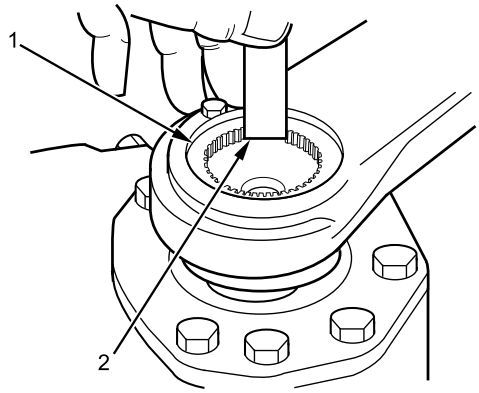

B231400545

Figure 11. Installed Depth Measurement.

9. Remove retainer after tightening and measure distance from end of sector shaft (Figure 11, Item 2) to recessed area of pitman arm (Figure 11, Item 1). Acceptable dimension is: M-110 retainers – 1/8-3/16 inch (3.2-4.8 mm). If measurement is outside specification, replacement of sector shaft or pitman arm may be required.

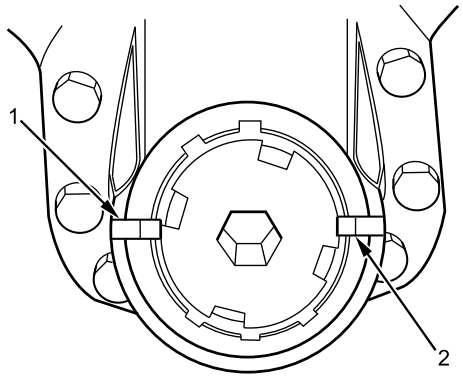

B231400543

Figure 12. Pitman Arm and Retainer.

10. Install retainer into sector shaft hand-tight if measurement is within specification. Make sure retainer tabs (Figure 12, Item 2) align with notches in pitman arm (Figure 12, Item 1).

PITMAN ARM REMOVAL AND INSTALLATION - (CONTINUED)

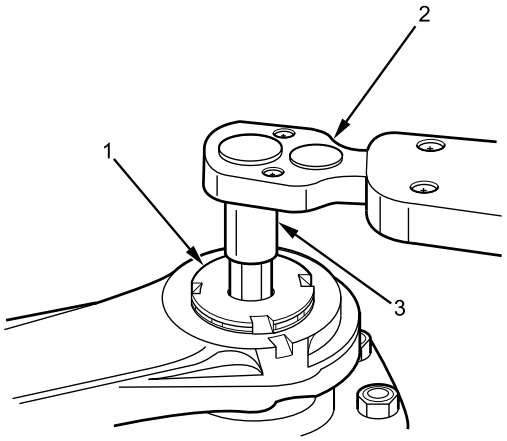

B231400544

Figure 13. Tightening Retainer.

NOTE

Pitman arm retainers are supplied as a kit with three torque specifications: M-80 – 225 lb-ft (305 N•m); M-90 and M-100 – 350 lb-ft (475 N•m); or M-110 – 450 lb-ft (601 N•m). Torque value is stamped on face of retainer. Check torque value stamped on original retainer to ensure correct retainer is used before installing.

11. Torque retainer (Figure 13, Item 1) to value stamped on it, using hex-socket driver (Figure 13, Item 3) and torque wrench (Figure 13, Item 2).

PITMAN ARM REMOVAL AND INSTALLATION - (CONTINUED)

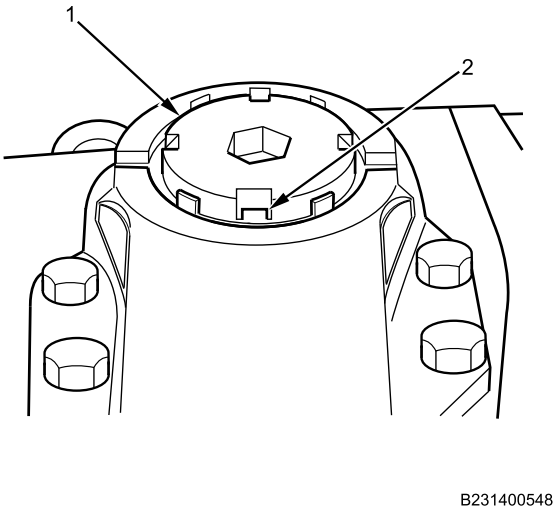

Figure 14. Pitman Arm Retainer.

WARNING

Proper installation of pitman arm is critical to vehicle safety. Install pitman arm after steering gear is mounted on vehicle so proper torque can be applied to pitman arm. Otherwise, pitman arm could loosen and cause loss of vehicle control. If pitman arm is loose, replace pitman arm and sector shaft. Always use a new pitman arm retainer. If tabs on retainer and notches on pitman arm do not line up, tighten beyond specified torque value until two tabs align. Never back off retainer to align retaining tabs. Failure to comply may result in damage to equipment, causing loss of steering control, and possible injury or death to personnel.

12. After specified torque is reached, continue tightening until two of retaining tabs (Figure 14, Item 2) align with slots in retainer (Figure 14, Item 1).

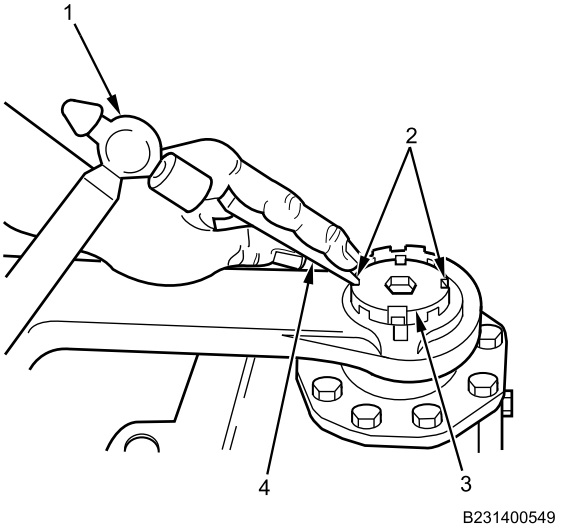

Figure 15. Bending Retaining Tabs.

13. Use hammer (Figure 15, Item 1) and 3/8-inch punch (Figure 15, Item 4) to lock two retaining tabs (Figure 15, Item 2) into retainer (Figure 15, Item 3).

END OF TASK

PITMAN ARM REMOVAL AND INSTALLATION - (CONTINUED)

FOLLOW-ON MAINTENANCE

1. Turn MAIN POWER switch on (TM 9-2355-106-10).
2. Start engine (TM 9-2355-106-10).
3. Check steering (TM 9-2355-106-10).
4. Remove wheel chocks (TM 9-2355-106-10).
5. Test drive to verify proper steering operation (TM 9-2355-106-10).
6. Set parking brake (TM 9-2355-106-10).
7. Set transmission in NEUTRAL (N) (TM 9-2355-106-10).
8. Turn engine off (TM 9-2355-106-10).
9. Turn MAIN POWER switch off (TM 9-2355-106-10).

END OF TASK

END OF WORK PACKAGE

FIELD MAINTENANCE

STEERING DRAG LINK REMOVAL AND INSTALLATION

INITIAL SETUP:

Tools and Special Tools
General Mechanic's Tool Kit (GMTK) (WP 0795, Item 37)
Puller set, mechanical (WP 0795, Item 78)
Wrench, torque, 50-250 lb-ft, 1/2-inch drive (WP 0795, Item 143)

Materials/Parts
Cotter pin - (2) (WP 0796, Item 19)
Lubriplate (WP 0794, Item 32)

References
TM 9-2355-106-10
TM 9-2355-106-23P
WP 0782

Equipment Condition
Parking brake set (TM 9-2355-106-10)
Transmission set in NEUTRAL (N) (TM 9-2355-106-10)
Engine off (TM 9-2355-106-10)
MAIN POWER switch off (TM 9-2355-106-10)
Wheels chocked (TM 9-2355-106-10)

WARNING

Do not use heat on components to facilitate removal of steering arms. Heat may weaken other connecting parts. Apply lubricating spray and let soak for a few minutes, then use breaker bar to break loose. Use correct socket wrench to avoid damaging boltheads. Failure to comply may result in damage to equipment, causing loss of steering control, and possible injury or death to personnel.

REMOVAL

1. Remove cotter pin (Figure 1, Item 1) and nut (Figure 1, Item 2) from drag link stud (Figure 1, Item 3) at end of pitman arm (Figure 1, Item 4). Discard cotter pin (Figure 1, Item 1).

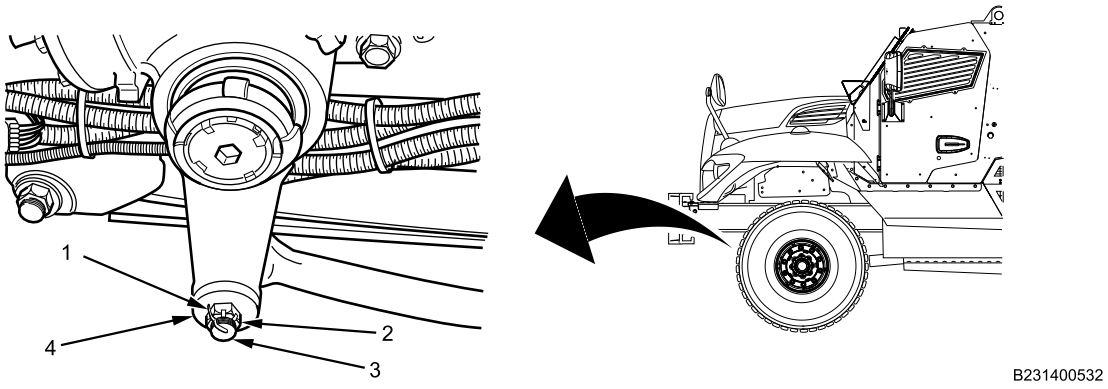

Figure 1. Pitman Arm and Drag Link.

STEERING DRAG LINK REMOVAL AND INSTALLATION - (CONTINUED)

2. Remove cotter pin (Figure 2, Item 1) and hex nut (Figure 2, Item 3) from drag link stud (Figure 2, Item 2) at steering arm (Figure 2, Item 4). Discard cotter pin (Figure 2, Item 1).

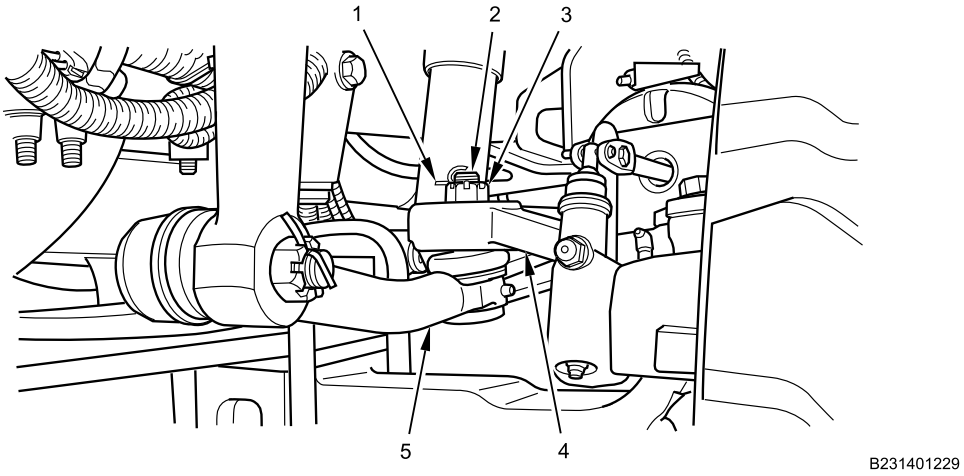

Figure 2. Steering Arm.

3. Using puller, remove drag link stud (Figure 2, Item 2) from steering arm (Figure 2, Item 4).
4. Using puller, remove drag link stud (Figure 4, Item 3) from pitman arm (Figure 4, Item 4).
5. Remove drag link (Figure 4, Item 5).

END OF TASK

INSTALLATION

WARNING

When installing new cotter pin, tighten nut until slot appears and insert cotter pin. Never back off nut to install cotter pin. Failure to comply may result in damage to equipment, causing loss of steering control, and possible injury or death to personnel.

1. Connect drag link (Figure 3, Item 5) to steering arm (Figure 3, Item 4) with hex nut (Figure 3, Item 3). Torque hex nut to 120-160 lb-ft (163-218 N•m).

STEERING DRAG LINK REMOVAL AND INSTALLATION - (CONTINUED)

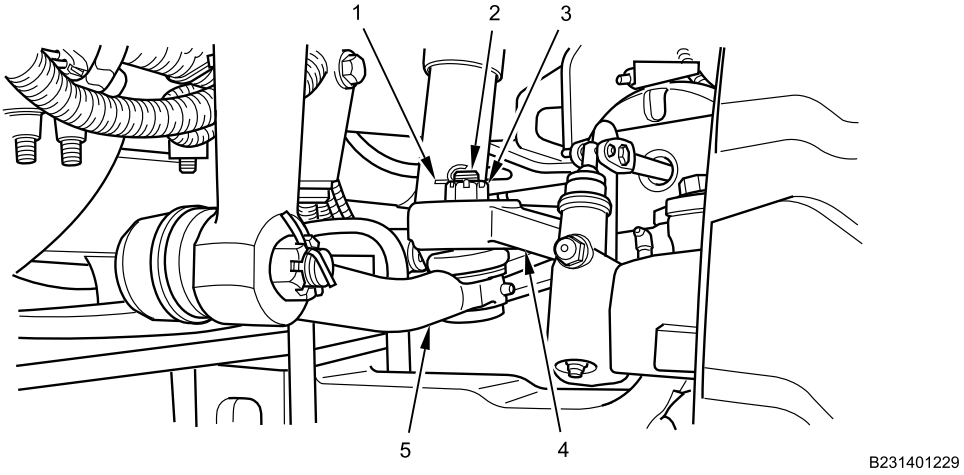

Figure 3. Steering Arm.

2. Install new cotter pin (Figure 3, Item 1) in drag link stud (Figure 3, Item 2) and bend cotter pin over stud.
3. Install drag link stud (Figure 4, Item 3) into pitman arm (Figure 4, Item 4) and torque hex nut (Figure 4, Item 2) to 120-160 lb-ft (163-218 N•m).

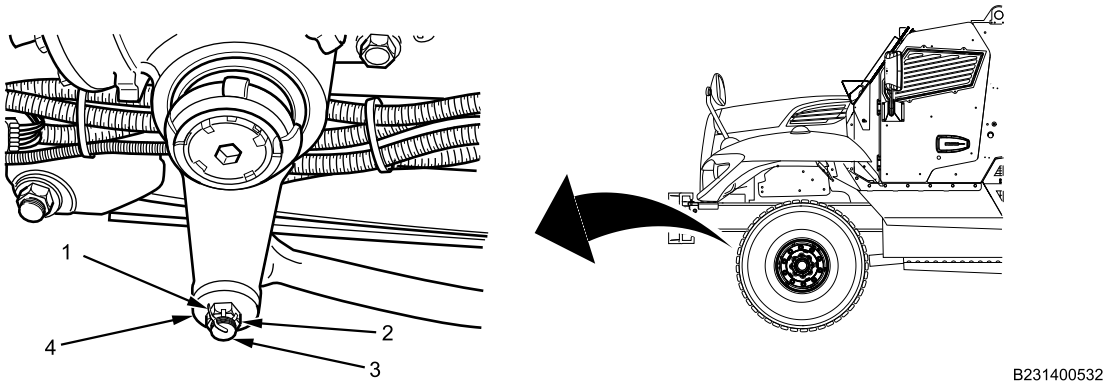

Figure 4. Pitman Arm and Drag Link.

4. Install new cotter pin (Figure 4, Item 1) into drag link stud (Figure 4, Item 3) and bend cotter pin over stud.

END OF TASK

FOLLOW-ON MAINTENANCE

1. Remove wheel chocks (TM 9-2355-106-10).
2. Turn MAIN POWER switch on (TM 9-2355-106-10).
3. Start engine (TM 9-2355-106-10).
4. Test drive vehicle to verify proper steering operation (TM 9-2355-106-10).
5. Set parking brake (TM 9-2355-106-10).

STEERING DRAG LINK REMOVAL AND INSTALLATION - (CONTINUED)

6. Set transmission in NEUTRAL (N) (TM 9-2355-106-10).
7. Turn engine off (TM 9-2355-106-10).
8. Turn MAIN POWER switch off (TM 9-2355-106-10).

END OF TASK

END OF WORK PACKAGE

FIELD MAINTENANCE

STEERING GEAR REMOVAL AND INSTALLATION

INITIAL SETUP:

Tools and Special Tools
General Mechanic's Tool Kit (GMTK) (WP 0795, Item 37)
Puller, pitman arm (WP 0795, Item 80)
Jack, transmission (WP 0795, Item 61)

Materials/Parts
Gloves (WP 0794, Item 19)
Goggles, industrial (WP 0794, Item 20)
Locknut (WP 0796, Item 29)
Lock bolt (WP 0796, Item 131)

References
TM 9-2355-106-10
TM 9-2355-106-23P
WP 0782

Equipment Condition
Parking brake set (TM 9-2355-106-10)
Transmission set in NEUTRAL (N) (TM 9-2355-106-10)
Engine off (TM 9-2355-106-10)
MAIN POWER switch off (TM 9-2355-106-10)
Wheels chocked (TM 9-2355-106-10)
Engine hood opened and secured (TM 9-2355-106-10)
Left side engine armor removed (WP 0597)
Pitman arm removed (WP 0535)
Power steering fluid drained (WP 0543)

REMOVAL

WARNING

Engine components become extremely hot during normal operation. Allow engine to cool completely prior to performing maintenance. Use extreme care when working in close quarters in engine compartment. Stay clear of rotating parts. Wear safety goggles, work gloves, and long sleeves or shop coat. Failure to comply may result in serious injury or death to personnel.

Engine hood is extremely heavy and requires two-person lift. Ensure that there is adequate space in front of the vehicle to open hood completely without pinning or pinching personnel between hood and any other structure. Use extreme care when working under hood and make sure it is properly supported. Failure to comply may result in serious injury or death to personnel.

STEERING GEAR REMOVAL AND INSTALLATION - (CONTINUED)

CAUTION

Do not allow steering wheel to turn when steering shaft is removed from gear, or clock spring damage may result.

NOTE

Centering front wheels straight ahead before removal will assist in correct steering wheel position during installation.

Note location of cable lock straps prior to removal to aid installation.

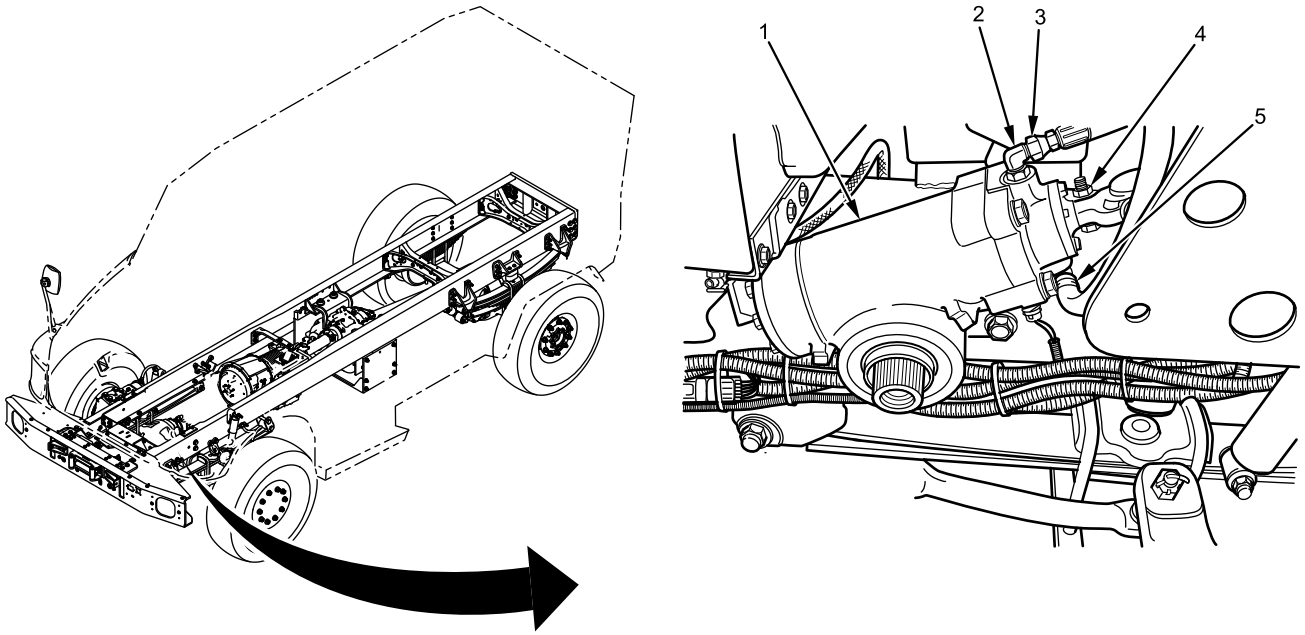

Figure 1. Steering Gear.

1. Remove and discard lower pinch bolt, washers, and locknut (Figure 1, Item 4) on steering shaft at steering gear (Figure 1, Item 1).
2. Slide steering shaft off splined shaft of steering gear (Figure 1, Item 1).
3. Disconnect power steering hose (Figure 1, Item 3) at elbow (Figure 1, Item 2) on steering gear (Figure 1, Item 1).
4. Remove elbow (Figure 1, Item 2) from steering gear (Figure 1, Item 1).
5. Disconnect power steering reservoir hose (Figure 1, Item 5) from steering gear (Figure 1, Item 1).

STEERING GEAR REMOVAL AND INSTALLATION - (CONTINUED)

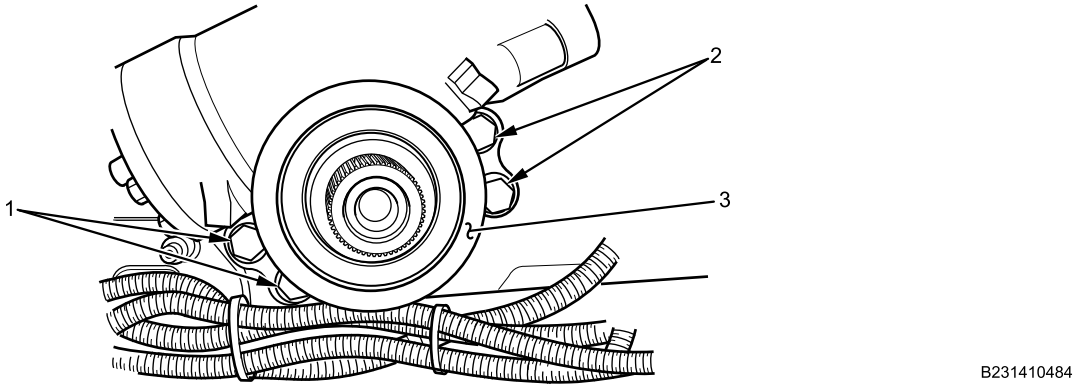

Figure 2. Steering Gear Mounting Bolts.

WARNING

Steering gear is heavy. Use care when removing or installing. Do not attempt to lift without a lifting device. Failure to comply may result in damage to equipment and serious injury or death to personnel.

6. Support steering gear (Figure 2, Item 3) with transmission jack.
7. Remove four steering gear mounting bolts (Figure 2, Item 1 and 2), washers, and nuts, then remove steering gear (Figure 2, Item 3).

END OF TASK

INSTALLATION

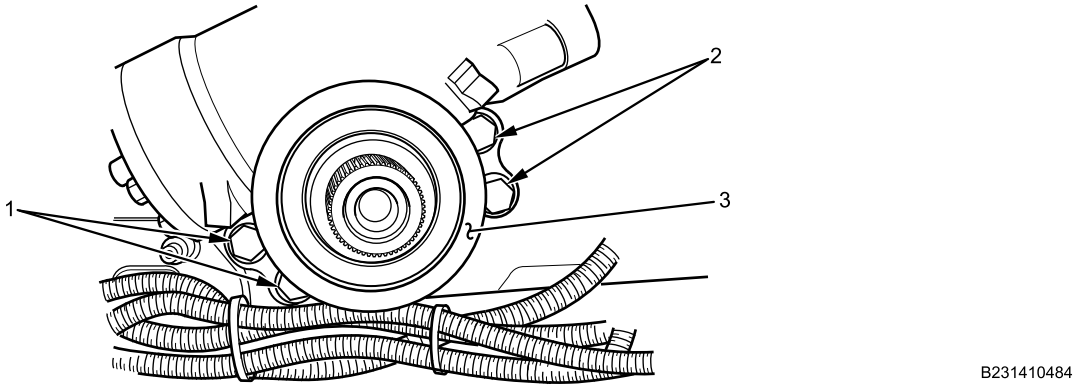

Figure 3. Steering Gear Mounting Bolts.

1. Install steering gear (Figure 3, Item 3) on frame with four mounting bolts (Figure 3, Item 1 and 2) and nuts. Tighten nuts securely.

STEERING GEAR REMOVAL AND INSTALLATION - (CONTINUED)

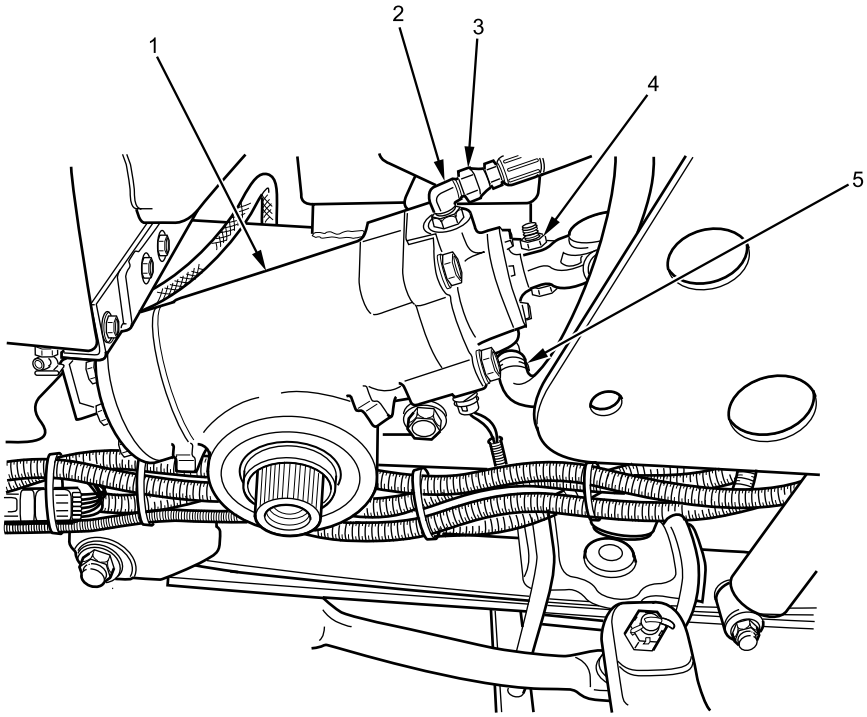

B231410483

Figure 4. Steering Gear.

2. Position steering shaft on splined shaft of steering gear (Figure 4, Item 1). Install new pinch bolt, washers, and new locknut (Figure 4, Item 4), and tighten securely.
3. Install power steering hose elbow (Figure 4, Item 2) into steering gear (Figure 4, Item 1).
4. Connect power steering hose (Figure 4, Item 3) to elbow (Figure 4, Item 2) and tighten.
5. Connect power steering reservoir hose (Figure 4, Item 5) to steering gear (Figure 4, Item 1).

END OF TASK

STEERING GEAR REMOVAL AND INSTALLATION - (CONTINUED)

ADJUSTMENT

NOTE

If steering gear is being replaced, automatic plungers need to be set.

As you reach end of travel, you will feel piston contact plunger. Continue turning until you reach axle stop bolt.

1. Start engine and turn wheel to full lock in both directions until axle stops are contacted, to set auto plunger to correct position.
2. Return wheels to straight ahead.

END OF TASK

FOLLOW-ON MAINTENANCE

1. Install pitman arm (WP 0535).
2. Fill power steering fluid (WP 0543).
3. Install left side engine armor (WP 0597).
4. Remove wheel chocks (TM 9-2355-106-10).

END OF TASK

END OF WORK PACKAGE

FIELD MAINTENANCE

BLEEDING SINGLE GEAR

INITIAL SETUP:

Tools and Special Tools
General Mechanic's Tool Kit (GMTK) (WP 0795, Item 37)
Jack, floor, 20-ton (WP 0795, Item 59)
Jackstand (10-ton) (WP 0795, Item 62)

Materials/Parts
Hydraulic fluid (WP 0794, Item 25)

References
TM 9-2355-106-10
TM 9-2355-106-23P
WP 0786
WP 0782

Equipment Condition
Parking brake set (TM 9-2355-106-10)
Transmission set in NEUTRAL (N) (TM 9-2355-106-10)
Engine off (TM 9-2355-106-10)
MAIN POWER switch off (TM 9-2355-106-10)
Rear wheels chocked (TM 9-2355-106-10)
Engine hood open and secured (TM 9-2355-106-10)

WARNING

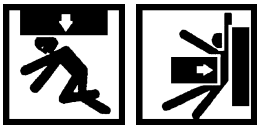

Engine hood is extremely heavy and requires two-person lift. Ensure that there is adequate space in front of the vehicle to open hood completely without pinning or pinching personnel between hood and any other structure. Use extreme care when working under hood and make sure it is properly supported. Failure to comply may result in serious injury or death to personnel.

Before lifting vehicle off ground, make sure it is parked on level surface. Set parking brake and chock wheels. Use hydraulic jack to lift vehicle. Jackstands and hydraulic jack must be used on a stable surface capable of supporting the combined weight of the vehicle being lifted and the lifting equipment. Do not use jack alone to support vehicle. Never work under or near a vehicle supported only by jack or lifting device. Use rated jackstands under frame rails to properly support vehicle. Do not support vehicle under front and rear axles. Use additional jackstands as necessary to support vehicle components during removal and installation procedures. Failure to comply may result in damage to equipment and serious injury or death to personnel.

BLEEDING SINGLE GEAR - (CONTINUED)

SERVICE

NOTE

Do not allow power steering reservoir to run out of fluid while bleeding the system. Fill reservoir as required during procedure.

1. Raise front axle (Figure 1, Item 3) with 20-ton floor jack (Figure 1, Item 2). Ensure wheels are raised above ground. Support front axle with 10-ton jackstands (Figure 1, Item 1) on leaf spring lower plate.

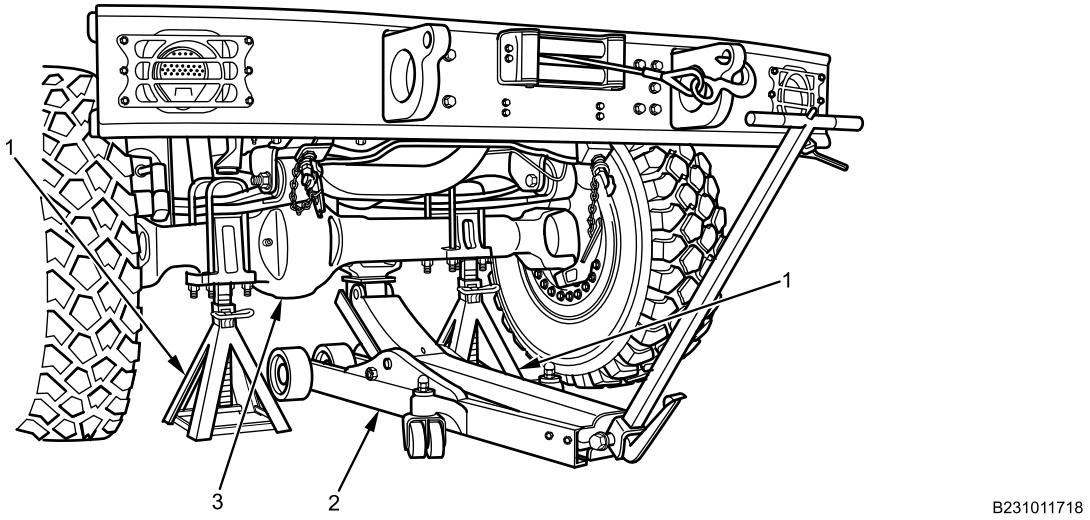

Figure 1. Support Front Axle.

2. Fill power steering fluid reservoir to correct level (TM 9-2355-106-10).

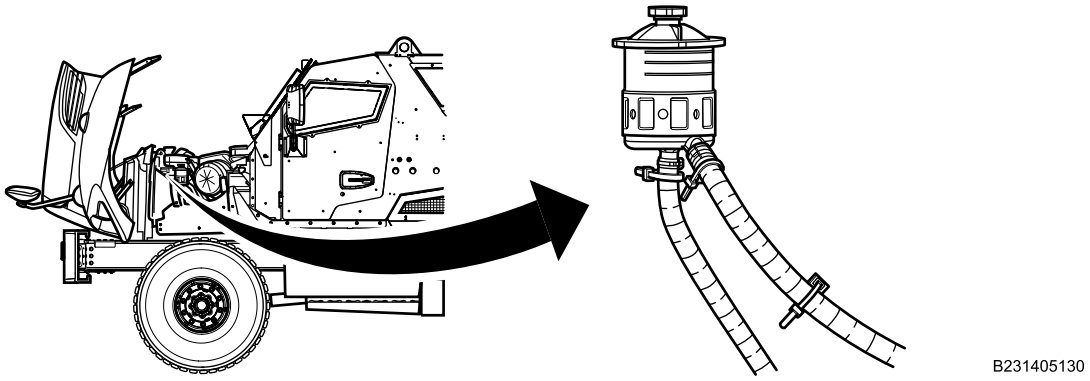

Figure 2. Power Steering Pump Reservoir.

3. Turn MAIN POWER switch on (TM 9-2355-106-10).
4. Start and idle engine (TM 9-2355-106-10).
5. Turn steering wheel from left to right, contacting each wheel stop and holding for 5 seconds.
6. Repeat previous step three times.
7. Return wheels to straight-ahead position.
8. Turn engine off (TM 9-2355-106-10).
9. Using 20-ton floor jack, remove 10-ton jackstands, and lower vehicle to floor.

BLEEDING SINGLE GEAR - (CONTINUED)

10. Fill power steering fluid reservoir to correct level (TM 9-2355-106-10).

END OF TASK

FOLLOW-ON MAINTENANCE

1. Turn MAIN POWER switch off (TM 9-2355-106-10).
2. Close engine hood (TM 9-2355-106-10).
3. Remove wheel chocks (TM 9-2355-106-10).

END OF TASK

END OF WORK PACKAGE

FIELD MAINTENANCE

POWER STEERING PUMP REMOVAL AND INSTALLATION

INITIAL SETUP:

Tools and Special Tools
General Mechanic's Tool Kit (GMTK) (WP 0795, Item 37)
Pan, drain, 5-gal. capacity (WP 0795, Item 75)

Materials/Parts
Cable lock strap - (3) (WP 0796, Item 124)
Lubricating oil (WP 0794, Item 25)
Gasket (WP 0796, Item 157)
Gloves (WP 0794, Item 18)
Gloves, leather (WP 0794, Item 19)
Goggles, industrial (WP 0794, Item 20)

References
TM 9-2355-106-10
TM 9-2355-106-23P
WP 0786
WP 0782

Equipment Condition
Parking brake set (TM 9-2355-106-10)
Transmission set in NEUTRAL (N) (TM 9-2355-106-10)
Engine off (TM 9-2355-106-10)
MAIN POWER switch off (TM 9-2355-106-10)
Wheels chocked (TM 9-2355-106-10)
Engine hood open and secured (TM 9-2355-106-10)
Belly armor removed (WP 0606)
Drain power steering reservoir (WP 0543)

REMOVAL

WARNING

Engine components become extremely hot during normal operation. Allow engine to cool completely prior to performing maintenance. Use extreme care when working in close quarters in engine compartment. Stay clear of rotating parts. Wear safety goggles, work gloves, and long sleeves or shop coat. Failure to comply may result in serious injury or death to personnel.

Engine hood is extremely heavy and requires two-person lift. Ensure that there is adequate space in front of the vehicle to open hood completely without pinning or pinching personnel between hood and any other structure. Use extreme care when working under hood and make sure it is properly supported. Failure to comply may result in serious injury or death to personnel.

Hydraulic fluid is flammable and harmful to skin and eyes. Wear work gloves and eye protection when handling fluids. Do not perform maintenance while smoking or near flame or sparks. If fluid contacts skin, wash affected area immediately. In case of eye contact, flush with water for 15 minutes and seek medical care immediately. Dispose of hydraulic fluid in accordance with standard operating procedures. Failure to comply may result in serious injury to personnel.

Increased effort may be required to turn steering wheel if power steering system fails or engine stops running. Stop vehicle as soon as road conditions permit. Operating vehicle with impaired steering can result in damage to equipment and serious injury or death to personnel.

POWER STEERING PUMP REMOVAL AND INSTALLATION - (CONTINUED)

NOTE

Place large drain pan below power steering pump area to catch power steering fluid that will be lost during removal.

Remove cable lock straps as necessary to perform procedure. Note position and size of cable lock straps to aid installation.

1. Remove four bolts (Figure 1, Item 2) from air compressor support (Figure 1, Item 1). Remove support from engine (Figure 1, Item 3).

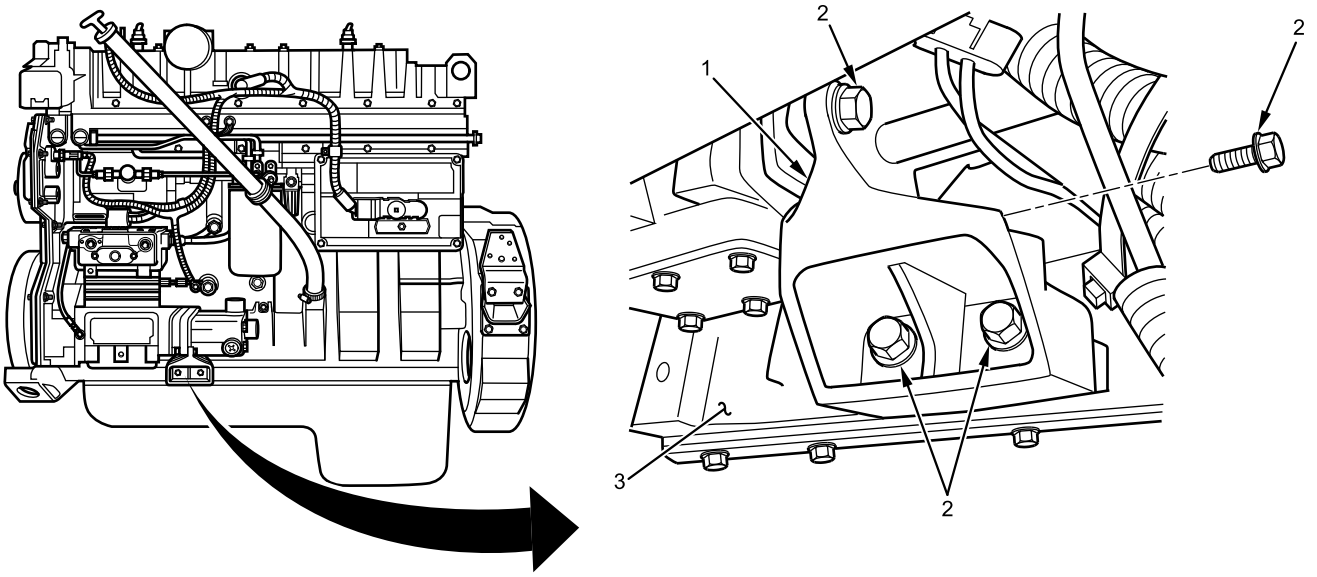

Figure 1. Air Compressor Support.

POWER STEERING PUMP REMOVAL AND INSTALLATION - (CONTINUED)

2. Remove cable lock straps as necessary to remove hoses from power steering pump.

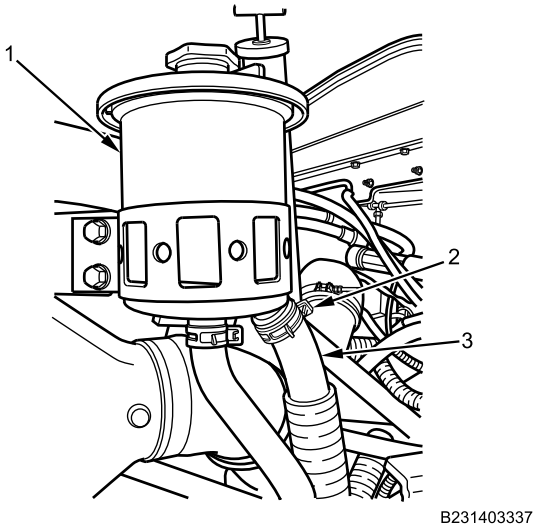

Figure 2. Power Steering Pump Reservoir.

3. Release spring clamp (Figure 2, Item 2) and remove inlet hose (Figure 2, Item 3) from power steering reservoir (Figure 2, Item 1).
4. Remove pressure hose (Figure 3, Item 3) from power steering pump (Figure 3, Item 1) at elbow fitting (Figure 3, Item 2).

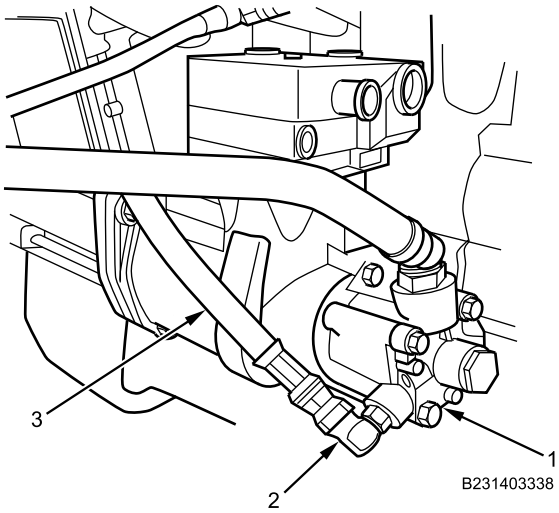

Figure 3. Power Steering Pump.

POWER STEERING PUMP REMOVAL AND INSTALLATION - (CONTINUED)

5. Remove two bolts (Figure 4, Item 1) from power steering pump (Figure 4, Item 2) flange. Lower bolt shown; upper bolt similar.

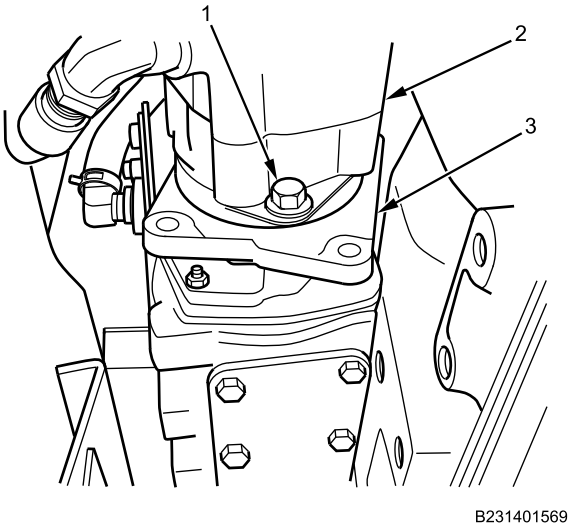

Figure 4. Pump Mounting.

6. Remove power steering pump (Figure 4, Item 2) from air compressor adapter plate (Figure 4, Item 3).
7. Remove power steering pump gasket from air compressor adapter plate (Figure 4, Item 3). Discard gasket.
8. Remove power steering pump and inlet hose.

END OF TASK

DISASSEMBLY

NOTE

Note orientation of inlet hose on pump to aid installation.

1. Remove power steering pump inlet hose (Figure 5, Item 1) from power steering pump (Figure 5, Item 2).

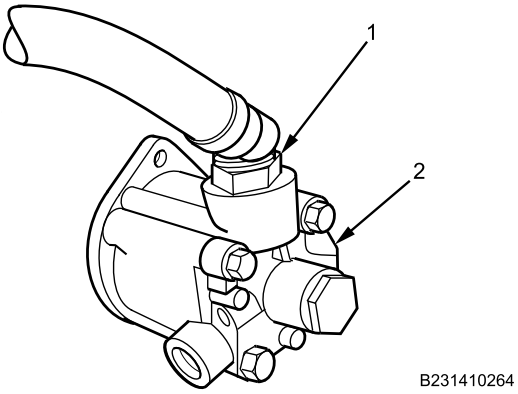

Figure 5. Power Steering Pump Inlet Hose.

END OF TASK

POWER STEERING PUMP REMOVAL AND INSTALLATION - (CONTINUED)

ASSEMBLY

1. Install power steering pump inlet hose (Figure 6, Item 1) on power steering pump (Figure 6, Item 2) in orientation noted during disassembly. Tighten securely.

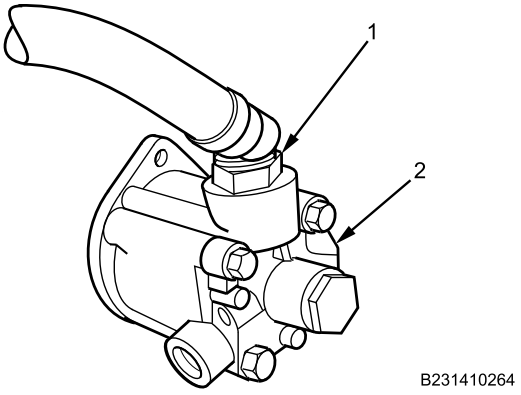

Figure 6. Power Steering Pump Inlet Hose.

END OF TASK

INSTALLATION

1. Guide inlet hose upwards towards reservoir while positioning power steering pump to air compressor.
2. Install power steering pump (Figure 7, Item 2) with new gasket onto air compressor adapter plate (Figure 7, Item 3). Align pump shaft splines with air compressor drive.

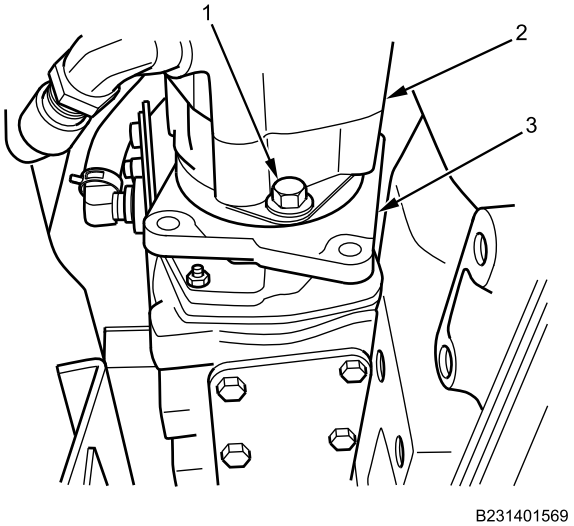

Figure 7. Pump Mounting.

3. Align bolt holes in power steering pump flange with holes in air compressor adapter plate (Figure 7, Item 3) and install two bolts. Lower bolt (Figure 7, Item 1) shown; upper similar. Tighten bolts securely.

POWER STEERING PUMP REMOVAL AND INSTALLATION - (CONTINUED)

4. Install pressure hose (Figure 8, Item 3) to power steering pump (Figure 8, Item 1) at elbow fitting (Figure 8, Item 2) and tighten securely.

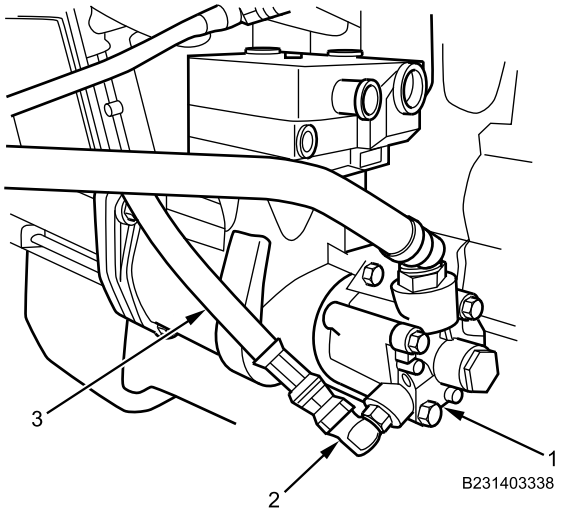

Figure 8. Power Steering Pump.

5. Install power steering pump inlet hose (Figure 9, Item 3) on power steering reservoir (Figure 9, Item 1) with spring clamp (Figure 9, Item 2).

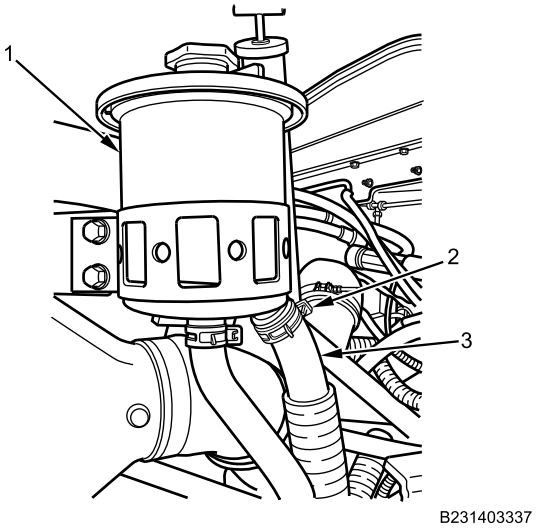

Figure 9. Power Steering Pump Reservoir.

6. Install all cable lock straps and tighten securely.

POWER STEERING PUMP REMOVAL AND INSTALLATION - (CONTINUED)

7. Install support (Figure 10, Item 1) on engine (Figure 10, Item 3) with four bolts (Figure 10, Item 2). Tighten bolts securely.

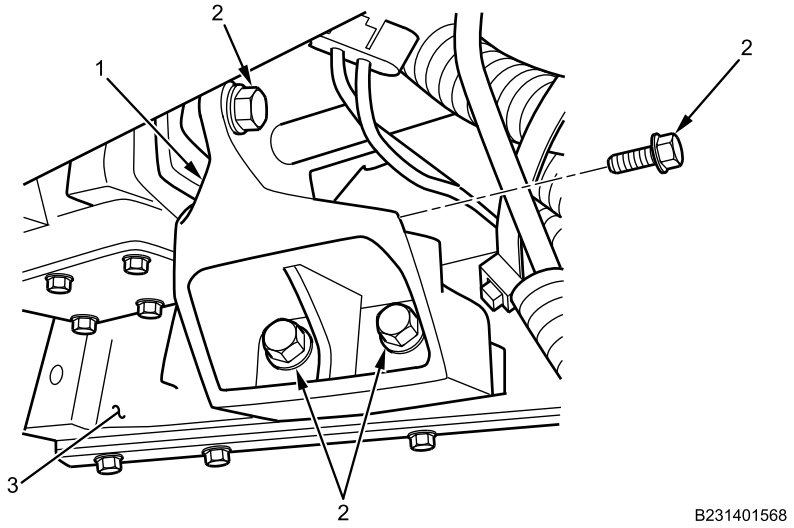

Figure 10. Power Steering Pump Support.

8. Remove drain pan.

END OF TASK

FOLLOW-ON MAINTENANCE

1. Bleed power steering (WP 0538).
2. Inspect for power steering leaks (TM 9-2355-106-10).
3. Install belly armor (WP 0606).
4. Close engine hood (TM 9-2355-106-10).
5. Remove wheel chocks (TM 9-2355-106-10).
6. Test-drive vehicle to check proper operation (TM 9-2355-106-10).
7. Check and fill power steering fluid reservoir as required (TM 9-2355-106-10).
8. Set parking brake (TM 9-2355-106-10).
9. Set transmission in NEUTRAL (N) (TM 9-2355-106-10).
10. Turn engine off (TM 9-2355-106-10).
11. Turn off MAIN POWER switch (TM 9-2355-106-10).

END OF TASK

END OF WORK PACKAGE

FIELD MAINTENANCE

POWER STEERING TUBING AND HOSE REMOVAL AND INSTALLATION

INITIAL SETUP:

Tools and Special Tools
General Mechanic's Tool Kit (GMTK) (WP 0795, Item 37)
Pan, drain, 5-gal. capacity (WP 0795, Item 75)

Materials/Parts
Hydraulic fluid (WP 0794, Item 25)
Gloves (WP 0794, Item 18)
Goggles (WP 0794, Item 20)

References
TM 9-2355-106-10
TM 9-2355-106-23P
WP 0782

Equipment Condition
Parking brake set (TM 9-2355-106-10)
Transmission set in NEUTRAL (N) (TM 9-2355-106-10)
Engine off (TM 9-2355-106-10)
MAIN POWER switch off (TM 9-2355-106-10)
Wheels chocked (TM 9-2355-106-10)
Engine hood open and secured (TM 9-2355-106-10)
Air cleaner assembly removed (WP 0257)
Left side engine armor removed (WP 0597)

WARNING

Engine components become extremely hot during normal operation. Allow engine to cool completely prior to performing maintenance. Use extreme care when working in close quarters in engine compartment. Stay clear of rotating parts. Wear safety goggles, work gloves, and long sleeves or shop coat. Failure to comply may result in serious injury or death to personnel.

Engine hood is extremely heavy and requires two-person lift. Ensure that there is adequate space in front of the vehicle to open hood completely without pinning or pinching personnel between hood and any other structure. Use extreme care when working under hood and make sure it is properly supported. Failure to comply may result in serious injury or death to personnel.

Hydraulic fluid is flammable and harmful to skin and eyes. Wear work gloves and eye protection when handling fluids. Do not perform maintenance while smoking or near flame or sparks. If fluid contacts skin, wash affected area immediately. In case of eye contact, flush with water for 15 minutes and seek medical care immediately. Dispose of hydraulic fluid in accordance with standard operating procedures. Failure to comply may result in serious injury to personnel.

Increased effort may be required to turn steering wheel if power steering system fails or engine stops running. Stop vehicle as soon as road conditions permit. Operating vehicle with impaired steering can result in damage to equipment and serious injury or death to personnel.

POWER STEERING TUBING AND HOSE REMOVAL AND INSTALLATION - (CONTINUED)

REMOVAL

NOTE

Place large drain pan below steering gear area to catch power steering fluid that will be lost during removal.

1. Release hose clamp (Figure 1, Item 7) and remove hose (Figure 1, Item 9) from steering gear. Drain hose into drain pan.

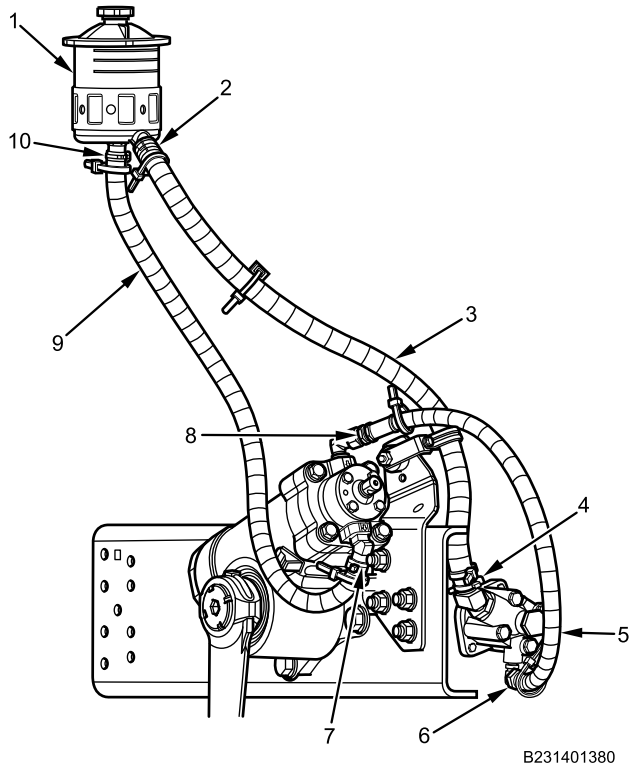

Figure 1. Power Steering Hoses.

2. Release hose clamp (Figure 1, Item 4) and remove hose (Figure 1, Item 3) from power steering pump. Drain hose into drain pan.
3. Release hose clamps (Figure 1, Item 2 and 10) and remove hoses (Figure 1, Item 9 and 3) from power steering reservoir (Figure 1, Item 1).
4. Remove high pressure hose (Figure 1, Item 5) from power steering pump fitting (Figure 1, Item 6) and position end of hose over drain pan.
5. Remove high pressure hose (Figure 1, Item 5) from steering gear fitting (Figure 1, Item 8). Drain hose into drain pan.

END OF TASK

POWER STEERING TUBING AND HOSE REMOVAL AND INSTALLATION - (CONTINUED)

INSTALLATION

1. Install high pressure hose (Figure 1, Item 5) on steering gear fitting (Figure 1, Item 8) and tighten securely.
2. Install high pressure hose (Figure 1, Item 5) on power steering pump fitting (Figure 1, Item 6) and tighten securely.
3. Install hose (Figure 1, Item 9) on power steering reservoir (Figure 1, Item 1) with hose clamp (Figure 1, Item 10).
4. Install hose (Figure 1, Item 9) on steering gear with hose clamp (Figure 1, Item 7).
5. Install hose (Figure 1, Item 3) on power steering reservoir (Figure 1, Item 1) with hose clamp (Figure 1, Item 2).
6. Install hose (Figure 1, Item 3) on power steering pump with hose clamp (Figure 1, Item 4).
7. Fill power steering reservoir (Figure 1, Item 1).
8. Turn MAIN POWER switch on (TM 9-2355-106-10).
9. Start engine (TM 9-2355-106-10).
10. Turn steering wheel in both directions to work air bubbles out of system.
11. Check for leaks at hose ends.
12. Add power steering fluid as required to fill reservoir.
13. Shut engine off (TM 9-2355-106-10).
14. Turn MAIN POWER switch off (TM 9-2355-106-10).
15. Clean off excess power steering fluid.
16. Remove drain pan.

END OF TASK

FOLLOW-ON MAINTENANCE

1. Install left side engine armor (WP 0597).
2. Install air cleaner assembly (WP 0257).
3. Close and secure hood (TM 9-2355-106-10).
4. Remove wheel chocks (TM 9-2355-106-10).

END OF TASK

END OF WORK PACKAGE

FIELD MAINTENANCE

POWER STEERING RESERVOIR REMOVAL AND INSTALLATION

INITIAL SETUP:

Tools and Special Tools
General Mechanic's Tool Kit (GMTK) (WP 0795, Item 37)
Pan, drain, 5-gal. capacity (WP 0795, Item 75)
Cap and plug set (WP 0795, Item 23)
Gloves (WP 0794, Item 18)

Materials/Parts
Goggles, industrial (WP 0794, Item 20)
Hydraulic fluid (WP 0794, Item 25)

References
TM 9-2355-106-10
TM 9-2355-106-23P
WP 0782

Equipment Condition
Parking brake set (TM 9-2355-106-10)
Transmission set in NEUTRAL (N) (TM 9-2355-106-10)
Engine shut off (TM 9-2355-106-10)
MAIN POWER switch off (TM 9-2355-106-10)
Wheels chocked (TM 9-2355-106-10)
Engine hood open and secured (TM 9-2355-106-10)

REMOVAL

WARNING

Engine components become extremely hot during normal operation. Allow engine to cool completely prior to performing maintenance. Use extreme care when working in close quarters in engine compartment. Stay clear of rotating parts. Wear safety goggles, work gloves, and long sleeves or shop coat. Failure to comply may result in serious injury or death to personnel.

Engine hood is extremely heavy and requires two-person lift. Ensure that there is adequate space in front of the vehicle to open hood completely without pinning or pinching personnel between hood and any other structure. Use extreme care when working under hood and make sure it is properly supported. Failure to comply may result in serious injury or death to personnel.

Hydraulic fluid is flammable and harmful to skin and eyes. Wear work gloves and eye protection when handling fluids. Do not perform maintenance while smoking or near flame or sparks. If fluid contacts skin, wash affected area immediately. In case of eye contact, flush with water for 15 minutes and seek medical care immediately. Dispose of hydraulic fluid in accordance with standard operating procedures. Failure to comply may result in serious injury to personnel.

Increased effort may be required to turn steering wheel if power steering system fails or engine stops running. Stop vehicle as soon as road conditions permit. Operating vehicle with impaired steering can result in damage to equipment and serious injury or death to personnel.

POWER STEERING RESERVOIR REMOVAL AND INSTALLATION - (CONTINUED)

NOTE

Place large drain pan below steering gear area to catch power steering fluid that will be lost during removal.

1. Release spring clamps (Figure 1, Item 3 and 6) and remove two hoses (Figure 1, Item 4 and 5) from power steering reservoir (Figure 1, Item 2). Cap hoses.

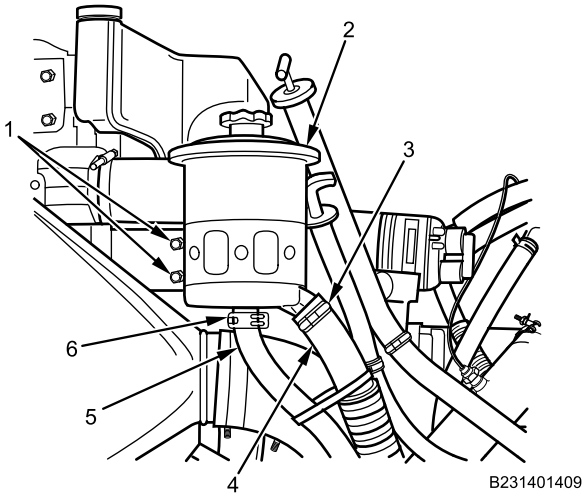

Figure 1. Power Steering Reservoir and Hoses.

2. Remove two bolts (Figure 1, Item 1) from power steering reservoir clamp.
3. Remove power steering reservoir (Figure 1, Item 2) from clamp.

END OF TASK

POWER STEERING RESERVOIR REMOVAL AND INSTALLATION - (CONTINUED)

INSTALLATION

1. Insert power steering reservoir (Figure 2, Item 2) into reservoir clamp. Align reservoir outlet towards outlet hose (Figure 2, Item 4).

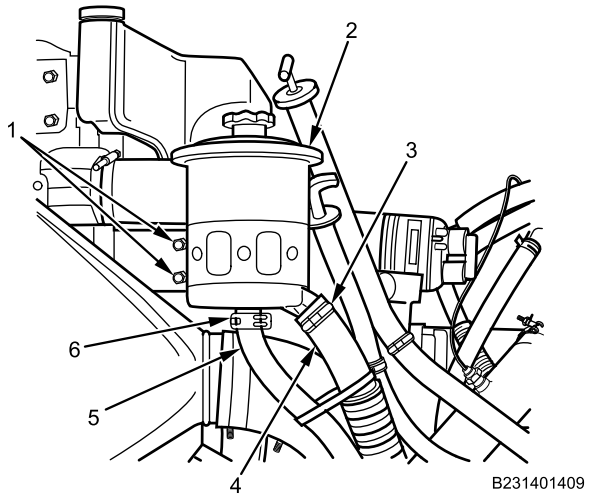

Figure 2. Power Steering Reservoir and Hoses.

2. Align bolt holes in reservoir clamp with holes in radiator support bracket and install two bolts (Figure 2, Item 1). Tighten bolts securely.
3. Remove caps from hoses and install two hoses (Figure 2, Item 4 and 5) on power steering reservoir (Figure 2, Item 2) with spring clamps (Figure 2, Item 3 and 6).
4. Fill power steering reservoir to full mark.
5. Turn on MAIN POWER switch.
6. Start engine.
7. Turn steering wheel in both directions to work air bubbles out of system.
8. Add power steering fluid as required to fill reservoir.
9. Remove drain pan.

END OF TASK

FOLLOW-ON MAINTENANCE

1. Close and secure hood (TM 9-2355-106-10).
2. Remove wheel chocks (TM 9-2355-106-10).
3. Test drive vehicle to check proper operation (TM 9-2355-106-10).
4. Check power steering system for leaks (TM 9-2355-106-10).
5. Check and fill power steering fluid reservoir as required (TM 9-2355-106-10).
6. Set parking brake (TM 9-2355-106-10).
7. Set transmission in NEUTRAL (N) (TM 9-2355-106-10).
8. Turn engine off (TM 9-2355-106-10).
9. Turn off MAIN POWER switch (TM 9-2355-106-10).

END OF TASK

END OF WORK PACKAGE

FIELD MAINTENANCE

POWER STEERING FILTER REMOVAL AND INSTALLATION

INITIAL SETUP:

Tools and Special Tools
General Mechanic's Tool Kit (GMTK) (WP 0795, Item 37)
Pan, drain, 5-gal. capacity (WP 0795, Item 75)
Fluid gun, direct delivery (WP 0795, Item 34)

Materials/Parts
Hydraulic fluid (WP 0794, Item 25)
Gasket (WP 0796, Item 114)
Filter, oil (WP 0796, Item 111)
Gloves (WP 0794, Item 18)
Goggles, industrial (WP 0794, Item 20)

References
TM 9-2355-106-10
TM 9-2355-106-23P
WP 0782

Equipment Condition
Parking brake set
Transmission set in NEUTRAL (N) (TM 9-2355-106-10)
Engine off (TM 9-2355-106-10)
MAIN POWER switch off (TM 9-2355-106-10)
Wheels chocked (TM 9-2355-106-10)
Engine hood open and secured (TM 9-2355-106-10)

WARNING

Engine components become extremely hot during normal operation. Allow engine to cool completely prior to performing maintenance. Use extreme care when working in close quarters in engine compartment. Stay clear of rotating parts. Wear safety goggles, work gloves, and long sleeves or shop coat. Failure to comply may result in serious injury or death to personnel.

Engine hood is extremely heavy and requires two-person lift. Ensure that there is adequate space in front of the vehicle to open hood completely without pinning or pinching personnel between hood and any other structure. Use extreme care when working under hood and make sure it is properly supported. Failure to comply may result in serious injury or death to personnel.

Hydraulic fluid is flammable and harmful to skin and eyes. Wear work gloves and eye protection when handling fluids. Do not perform maintenance while smoking or near flame or sparks. If fluid contacts skin, wash affected area immediately. In case of eye contact, flush with water for 15 minutes and seek medical care immediately. Dispose of hydraulic fluid in accordance with standard operating procedures. Failure to comply may result in serious injury to personnel.

Increased effort may be required to turn steering wheel if power steering system fails or engine stops running. Stop vehicle as soon as road conditions permit. Operating vehicle with impaired steering can result in damage to equipment and serious injury or death to personnel.

POWER STEERING FILTER REMOVAL AND INSTALLATION - (CONTINUED)

REMOVAL

CAUTION

Clean power steering reservoir cap area before removal. Failure to comply may result in damage to equipment.

NOTE

Place large drain pan below steering gear area to catch power steering fluid that will be lost during removal.

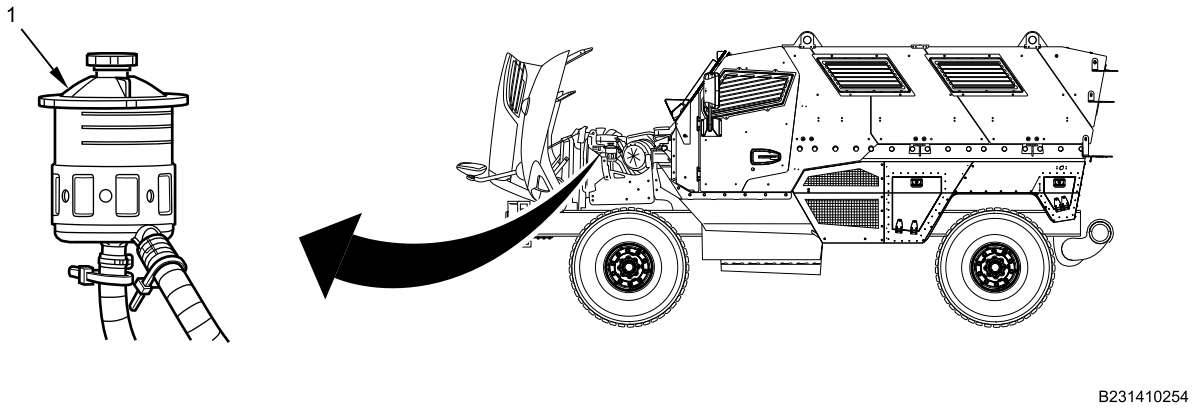

Figure 1. Power Steering Reservoir.

1. Clean power steering reservoir (Figure 1, Item 1) before removing cover.
2. Rotate power steering reservoir cover (Figure 2, Item 2) counterclockwise and lift to remove from reservoir (Figure 2, Item 5).
3. Remove reservoir cap (Figure 2, Item 1) from cover (Figure 2, Item 2).
4. Remove and discard reservoir cover gasket (Figure 2, Item 3).
5. Using fluid delivery gun, remove power steering fluid from power steering reservoir (Figure 2, Item 5).
6. Remove and discard power steering oil filter (Figure 2, Item 4).

END OF TASK

INSTALLATION

1. Insert new power steering oil filter (Figure 2, Item 4) into reservoir (Figure 2, Item 5).
2. Install new reservoir cover gasket (Figure 2, Item 3).
3. Install reservoir cover (Figure 2, Item 2) by pushing down and rotating clockwise.
4. Fill reservoir (Figure 2, Item 5) to full mark.
5. Install reservoir cap (Figure 2, Item 1).
6. Clean off any excess or spilled fluid.
7. Turn on MAIN POWER switch.
8. Start engine.
9. Turn steering wheel in both directions several times to work air out of system.
10. Add power steering fluid as required to fill reservoir.
11. Remove drain pan.

POWER STEERING FILTER REMOVAL AND INSTALLATION - (CONTINUED)

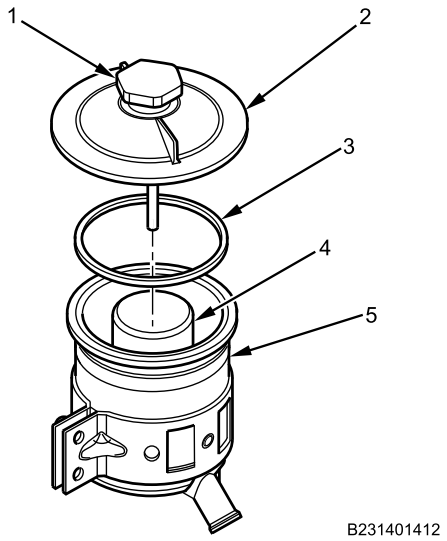

Figure 2. Power Steering Reservoir.

END OF TASK

FOLLOW-ON MAINTENANCE

1. Close and secure hood (TM 9-2355-106-10).
2. Remove wheel chocks (TM 9-2355-106-10).
3. Test-drive vehicle to check proper operation.
4. Check power steering system for leaks (TM 9-2355-106-10).
5. Check and fill power steering fluid reservoir as required (TM 9-2355-106-10).
6. Set parking brake (TM 9-2355-106-10).
7. Set transmission in NEUTRAL (N) (TM 9-2355-106-10).
8. Turn engine off (TM 9-2355-106-10).
9. Turn off MAIN POWER switch (TM 9-2355-106-10).

END OF TASK

END OF WORK PACKAGE

FIELD MAINTENANCE

POWER STEERING RESERVOIR DRAIN/FILL PROCEDURE

INITIAL SETUP:

Tools and Special Tools
General Mechanic's Tool Kit (GMTK) (WP 0795, Item 37)
Pan, drain, 5-gal. capacity (WP 0795, Item 75)

Materials/Parts
Goggles, industrial (WP 0794, Item 20)
Hydraulic fluid (WP 0794, Item 25)
Gloves (WP 0794, Item 18)
Gloves (WP 0794, Item 19)
Cable lock strap - (2) (WP 0796, Item 124)

References
TM 9-2355-106-10
TM 9-2355-106-23P
WP 0782

Equipment Condition
Parking brake set (TM 9-2355-106-10)
Transmission set in NEUTRAL (N) (TM 9-2355-106-10)
Engine off (TM 9-2355-106-10)
MAIN POWER switch off (TM 9-2355-106-10)
Rear wheels chocked (TM 9-2355-106-10)
Engine hood open and secured (TM 9-2355-106-10)

DRAIN

WARNING

Engine components become extremely hot during normal operation. Allow engine to cool completely prior to performing maintenance. Use extreme care when working in close quarters in engine compartment. Stay clear of rotating parts. Wear safety goggles, work gloves, and long sleeves or shop coat. Failure to comply may result in serious injury or death to personnel.

Engine hood is extremely heavy and requires two-person lift. Ensure that there is adequate space in front of the vehicle to open hood completely without pinning or pinching personnel between hood and any other structure. Use extreme care when working under hood and make sure it is properly supported. Failure to comply may result in serious injury or death to personnel.

Increased effort may be required to turn steering wheel if power steering system fails or engine stops running. Stop vehicle as soon as road conditions permit. Operating vehicle with impaired steering can result in damage to equipment and serious injury or death to personnel.

Hydraulic fluid is flammable and harmful to skin and eyes. Wear work gloves and eye protection when handling fluids. Do not perform maintenance while smoking or near flame or sparks. If fluid contacts skin, wash affected area immediately. In case of eye contact, flush with water for 15 minutes and seek medical care immediately. Dispose of hydraulic fluid in accordance with standard operating procedures. Failure to comply may result in serious injury to personnel.

NOTE

Remove cable lock straps as necessary to perform procedure. Note position and size of cable lock straps to aid installation.

POWER STEERING RESERVOIR DRAIN/FILL PROCEDURE - (CONTINUED)

1. Lift and support front of vehicle so front tires are off ground.

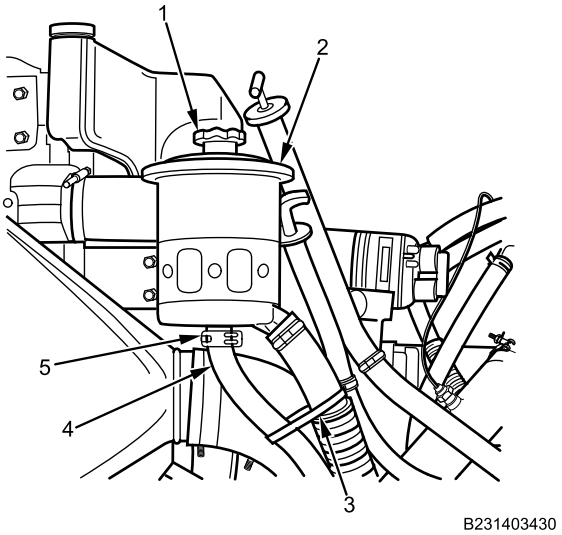

Figure 1. Power Steering Reservoir.

2. Cut cable lock straps (Figure 1, Item 3) as needed from power steering hose (Figure 1, Item 4) and discard.

NOTE

Place drain pan below left steering gear area to catch power steering fluid.

3. Remove hose (Figure 1, Item 4) from power steering reservoir (Figure 1, Item 2) by releasing spring clamp (Figure 1, Item 5). Point hose into drain pan.
4. Turn steering wheel slowly from full left to full right three times. This action should force fluid out of steering gear.
5. Remove fill cap (Figure 1, Item 1).
6. Allow fluid to drain into drain pan.

END OF TASK

FILL

1. Install hose (Figure 2, Item 4) on power steering reservoir (Figure 2, Item 2) with spring clamp (Figure 2, Item 5).

POWER STEERING RESERVOIR DRAIN/FILL PROCEDURE - (CONTINUED)

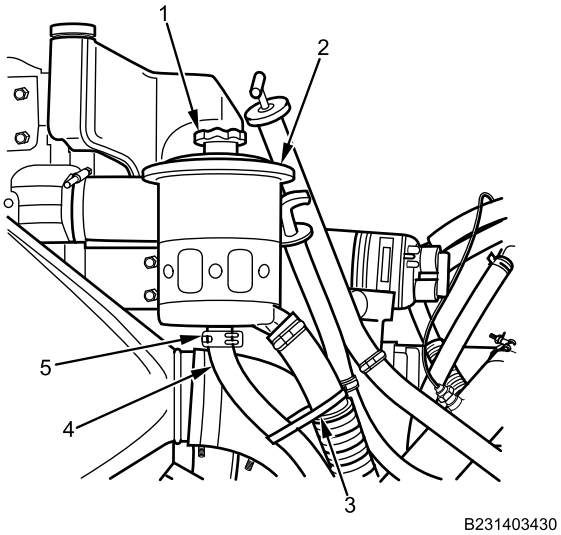

Figure 2. Power Steering Reservoir.

2. Install new cable lock straps (Figure 2, Item 3) removed during installation.
3. Fill power steering reservoir (Figure 2, Item 2) to 1 in. (2-1/2 cm) from top.
4. Install fill cap (Figure 2, Item 1).
5. Clean off all excess fluid.
6. Remove drain pan.

END OF TASK

FOLLOW-ON MAINTENANCE

1. Bleed power steering gear (WP 0538).
2. Close and secure hood (TM 9-2355-106-10).
3. Remove wheel chocks (TM 9-2355-106-10).
4. Turn MAIN POWER switch on (TM 9-2355-106-10).
5. Test drive vehicle to check proper steering operation (TM 9-2355-106-10).
6. Check power steering system for leaks (TM 9-2355-106-10).
7. Check and fill power steering fluid reservoir as required (TM 9-2355-106-10).
8. Set parking brake (TM 9-2355-106-10).
9. Set transmission in NEUTRAL (N) (TM 9-2355-106-10).
10. Turn engine off (TM 9-2355-106-10).
11. Turn MAIN POWER switch off (TM 9-2355-106-10).

END OF TASK

END OF WORK PACKAGE

FIELD MAINTENANCE

FRONT BUMPER REMOVAL AND INSTALLATION

INITIAL SETUP:

Tools and Special Tools
General Mechanic's Tool Kit (GMTK) (WP 0795, Item 37)

Materials/Parts
Cloth (WP 0794, Item 11)

Personnel Required
Maintainer - (2)

References
TM 9-2355-106-10
TM 9-2355-106-23P
WP 0782

Equipment Condition
Parking brake set (TM 9-2355-106-10)
Transmission set in NEUTRAL (N) (TM 9-2355-106-10)
Engine off (TM 9-2355-106-10)
MAIN POWER switch off (TM 9-2355-106-10)
Wheels chocked (TM 9-2355-106-10)
Blackout drive light assembly removed (WP 0366)
Right and left front bumper turn signal and parking light assemblies removed (WP 0361)
Infrared light removed (WP 0368)
Front trailer hookup removed (WP 0428)

REMOVAL

NOTE

Right side shown; left side similar.

1. Remove six bolts (Figure 1, Item 1) and two nuts from towing eye braces (Figure 1, Item 2).

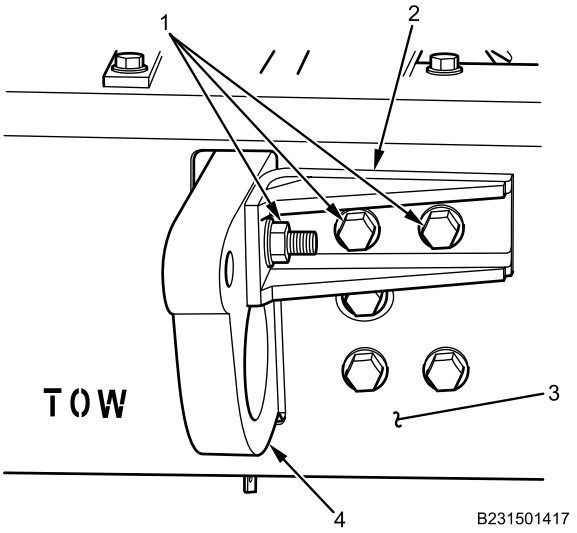

Figure 1. Right Front Towing Eye Brace.

2. Remove towing eye braces (Figure 1, Item 2) from bumper (Figure 1, Item 3) and towing eyes (Figure 1, Item 4).

FRONT BUMPER REMOVAL AND INSTALLATION - (CONTINUED)

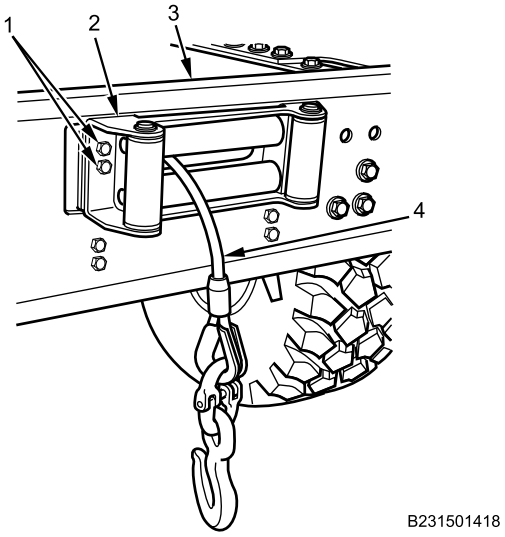

Figure 2. Right Side View of Winch Carrier Assembly.

WARNING

Wear safety goggles and heavy leather-palmed work gloves when handling cable. Never let moving cable slide through hands, even when wearing gloves. Cable can become frayed or contain broken wires. A broken wire could cut through gloves and injure hands. Do not wear loose clothing; it can get caught in cable as cable winds around spool drum. Failure to comply may result in serious injury or death to personnel.

3. Roll out 30 inches (76 cm) of winch cable (Figure 2, Item 4).
4. With assistant holding roller fairlead (Figure 2, Item 2) in place, remove four bolts (Figure 2, Item 1) from winch roller fairlead.
5. With assistant, remove winch roller fairlead from bumper (Figure 2, Item 3) and allow roller fairlead to hang from winch cable (Figure 2, Item 4).

FRONT BUMPER REMOVAL AND INSTALLATION - (CONTINUED)

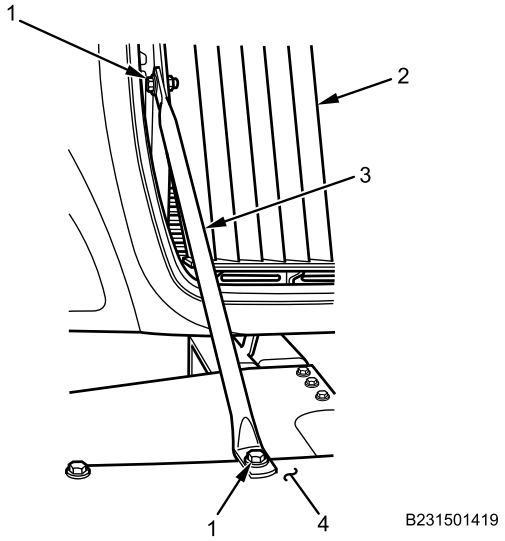

Figure 3. Right Side Armor Grille Support.

6. Remove four bolts (Figure 3, Item 1) and two nuts from armor grille supports (Figure 3, Item 3).
7. Remove armor grille supports (Figure 3, Item 3) from armor grille (Figure 3, Item 2) and bumper (Figure 3, Item 4).

FRONT BUMPER REMOVAL AND INSTALLATION - (CONTINUED)

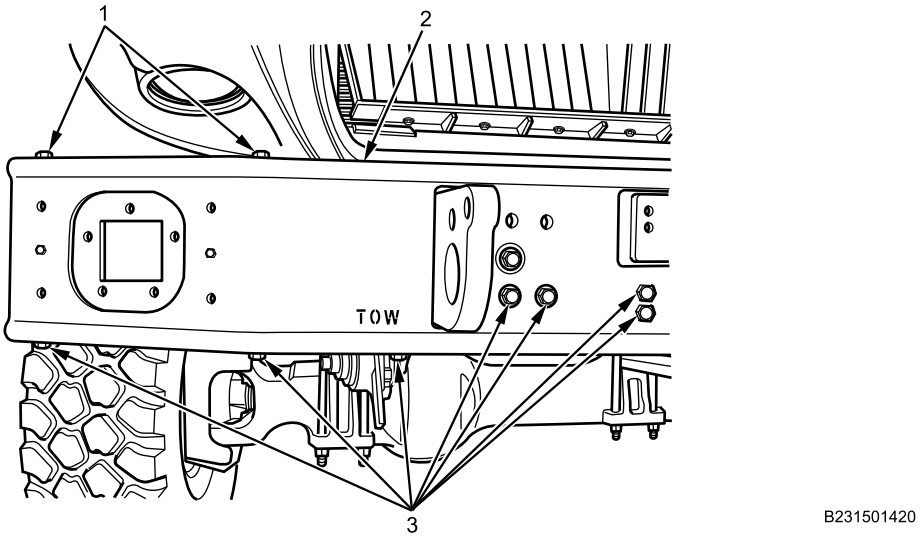

Figure 4. Right Side of Front Bumper.

8. Remove 14 bolts (Figure 4, Item 3) from front bumper (Figure 4, Item 2).

WARNING

Front bumper is heavy. Do not allow front bumper to fall from towing eye hooks when removing fasteners. Do not attempt to lift front bumper without assistance from maintainer. Wear safety goggles and work gloves. Failure to comply may result in damage to equipment and serious injury or death to personnel.

9. With assistant, secure bumper (Figure 4, Item 2) and remove four bolts (Figure 4, Item 1) from bumper.
10. With assistant, remove front bumper (Figure 4, Item 2).
11. Feed winch cable and roller fairlead through winch hole in bumper (Figure 4, Item 2).

FRONT BUMPER REMOVAL AND INSTALLATION - (CONTINUED)

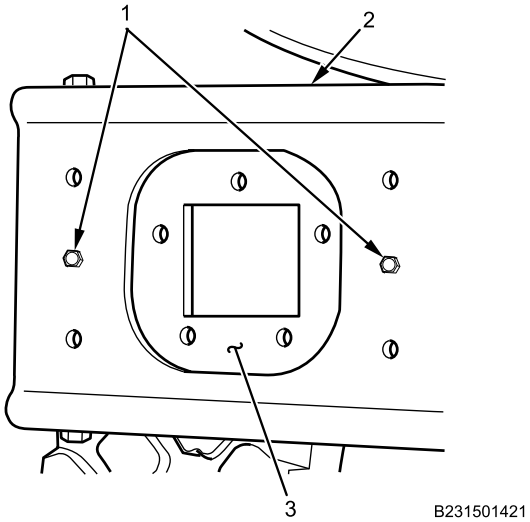

Figure 5. Right Front Turn Signal and Parking Light Panel Mount.

12. Remove four bolts (Figure 5, Item 1) from bumper (Figure 5, Item 2).
13. Remove turn signal and parking light panel mounts (Figure 5, Item 3) from bumper (Figure 5, Item 2).

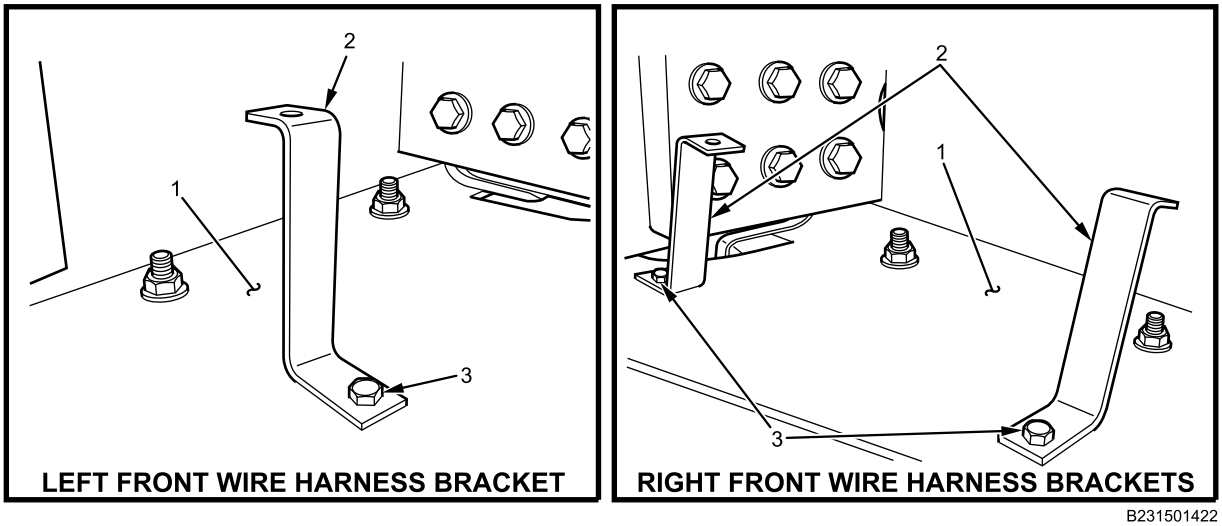

Figure 6. Wire Harness Supports.

14. Remove three bolts (Figure 6, Item 3) and nuts from three wire harness supports (Figure 6, Item 2).
15. Remove three wire harness supports (Figure 6, Item 2) from front bumper lower braces (Figure 6, Item 1).

FRONT BUMPER REMOVAL AND INSTALLATION - (CONTINUED)

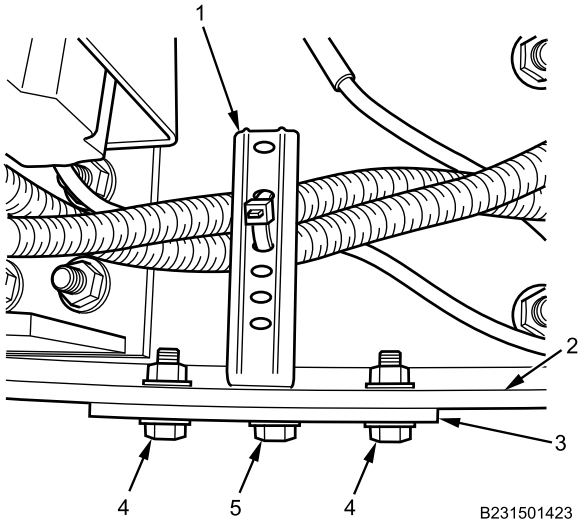

Figure 7. Right Side Lower Bumper Brace.

16. With assistant, remove two bolts (Figure 7, Item 5) and nuts from winch harness supports (Figure 7, Item 1).
17. With assistant, remove four bolts (Figure 7, Item 4) and nuts from lower bumper braces (Figure 7, Item 3).
18. With assistant, remove lower bumper braces (Figure 7, Item 3) from frame rails (Figure 7, Item 2).

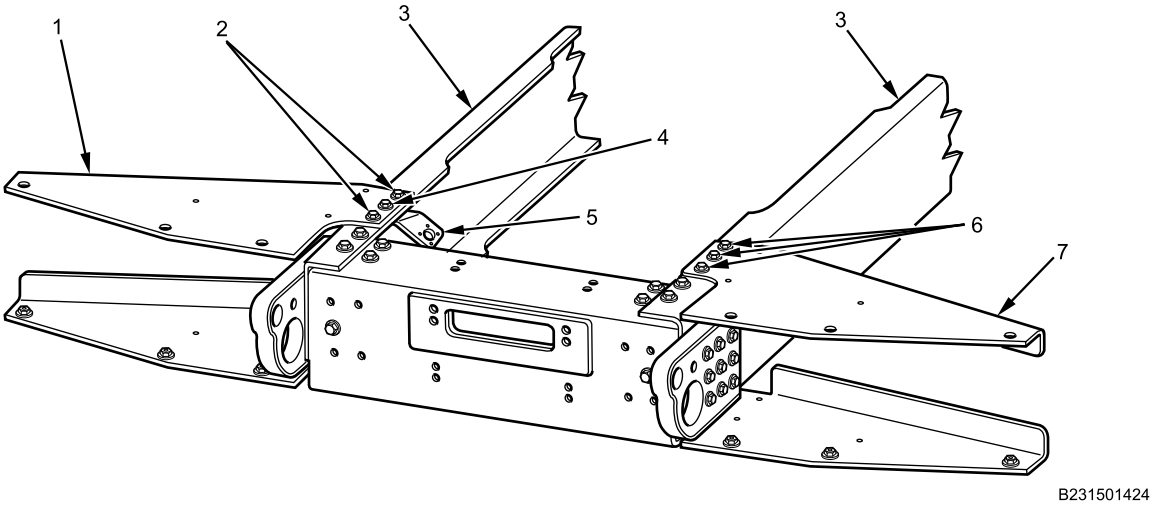

Figure 8. Upper Bumper Braces.

19. Remove bolt (Figure 8, Item 4) and nut from winch remote control support (Figure 8, Item 5).
20. Remove two bolts (Figure 8, Item 2) and nuts from right upper bumper brace (Figure 8, Item 1).
21. Remove right upper bumper brace (Figure 8, Item 1) from frame rail (Figure 8, Item 3).
22. Remove three bolts (Figure 8, Item 6) and nuts from left upper bumper brace (Figure 8, Item 7).
23. Remove left upper bumper brace (Figure 8, Item 7) from frame rail (Figure 8, Item 3).

END OF TASK

FRONT BUMPER REMOVAL AND INSTALLATION - (CONTINUED)

INSTALLATION

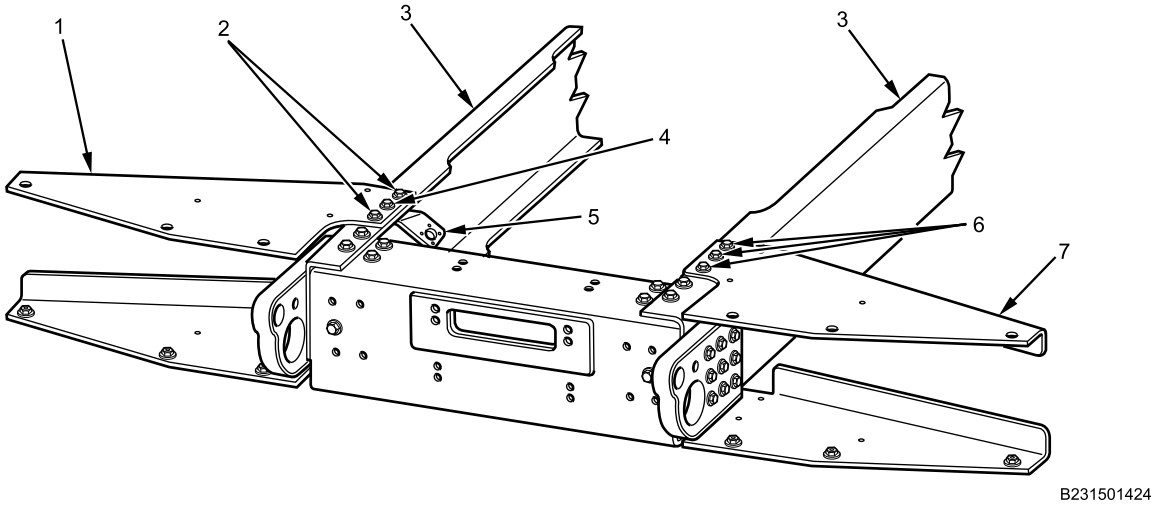

Figure 9. Upper Bumper Braces.

1. Install right upper bumper brace (Figure 9, Item 1) on frame rail (Figure 9, Item 3) with two bolts (Figure 9, Item 2) and nuts. Do not tighten nuts and bolts.
2. Install winch remote control support (Figure 9, Item 5) on frame rail (Figure 9, Item 3) with bolt (Figure 9, Item 4) and nut. Do not tighten nut and bolt.
3. Install left upper bumper brace (Figure 9, Item 7) on frame rail (Figure 9, Item 3) with three bolts (Figure 9, Item 6) and nuts. Do not tighten nuts and bolts.

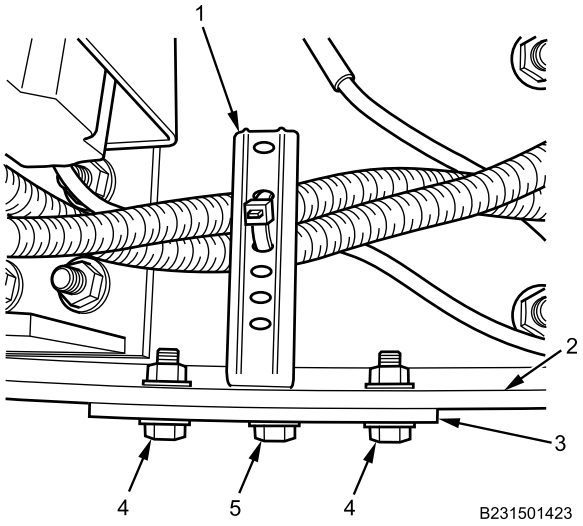

Figure 10. Right Side Lower Bumper Brace.

4. Install lower bumper braces (Figure 10, Item 3) on frame rails (Figure 10, Item 2) with four bolts (Figure 10, Item 4) and nuts. Do not tighten nuts and bolts.
5. Install winch harness supports (Figure 10, Item 1) on frame rails (Figure 10, Item 2) with two bolts (Figure 10, Item 5) and nuts. Do not tighten nuts and bolts.

FRONT BUMPER REMOVAL AND INSTALLATION - (CONTINUED)

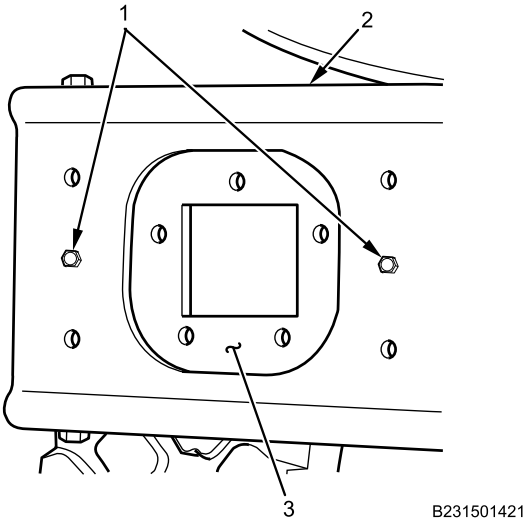

Figure 11. Right Front Turn Signal and Parking Light Panel Mount.

6. Install turn signal and parking light panel mounts (Figure 11, Item 3) on bumper (Figure 11, Item 2) with four bolts (Figure 11, Item 1) and nuts. Tighten nuts and bolts securely.

WARNING

Front bumper is heavy. Do not allow front bumper to fall from towing eye hooks when removing fasteners. Do not attempt to lift front bumper without assistance from maintainer. Wear safety goggles and work gloves. Failure to comply may result in damage to equipment and serious injury or death to personnel.

7. Feed winch cable and roller fairlead through winch hole in bumper (Figure 12, Item 2).

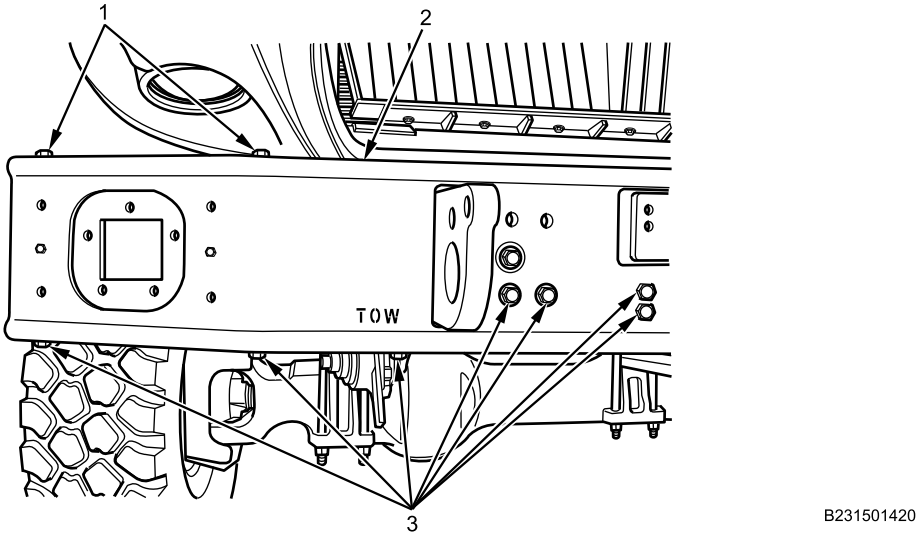

Figure 12. Right Side of Front Bumper.

FRONT BUMPER REMOVAL AND INSTALLATION - (CONTINUED)

8. With assistant, install front bumper (Figure 12, Item 2) on braces with four bolts (Figure 12, Item 1) and nuts. Do not tighten nuts and bolts.
9. Install 14 bolts (Figure 12, Item 3) on bumper (Figure 12, Item 2). Do not tighten bolts.
10. Align front bumper (Figure 12, Item 2) and tighten 18 bolts (Figure 12, Item 1 and 3) securely.
11. Tighten six bolts (Figure 9, Item 2, 4, and 6) and nuts securely.
12. Tighten six bolts (Figure 10, Item 4 and 5) and nuts securely.

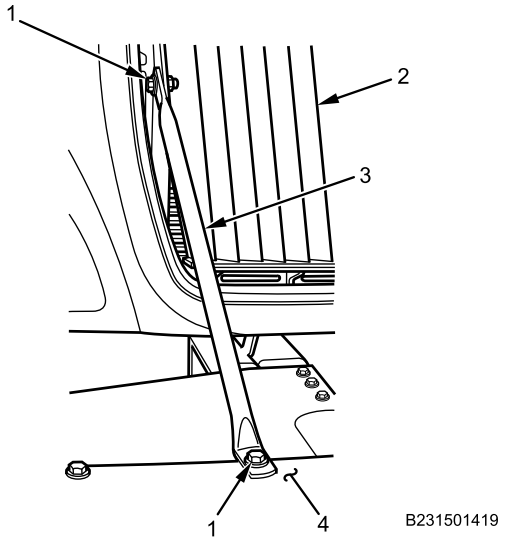

Figure 13. Right Side Armor Grille Support.

13. Install armor grille supports (Figure 13, Item 3) on armor grille (Figure 13, Item 2) and front bumper (Figure 13, Item 4) with four bolts (Figure 13, Item 1) and two nuts and tighten securely.

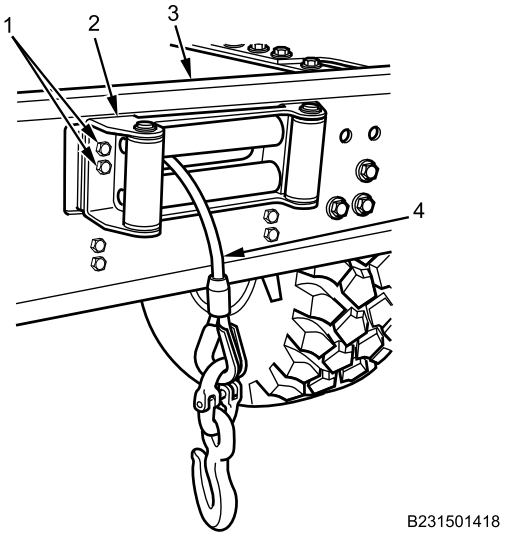

Figure 14. Right Side View of Winch Carrier Assembly.

14. Install winch carrier assembly (Figure 14, Item 2) on bumper (Figure 14, Item 3) with four bolts (Figure 14, Item 1) and tighten securely.
15. Secure winch cable (Figure 14, Item 4).

FRONT BUMPER REMOVAL AND INSTALLATION - (CONTINUED)

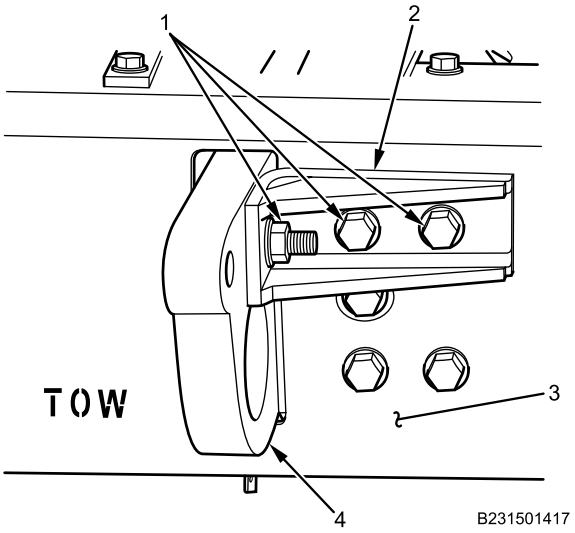

Figure 15. Right Front Towing Eye Brace.

16. Install towing eye braces (Figure 15, Item 2) on bumper (Figure 15, Item 3) and towing eyes (Figure 15, Item 4) with six bolts (Figure 15, Item 1) and two nuts and tighten securely.

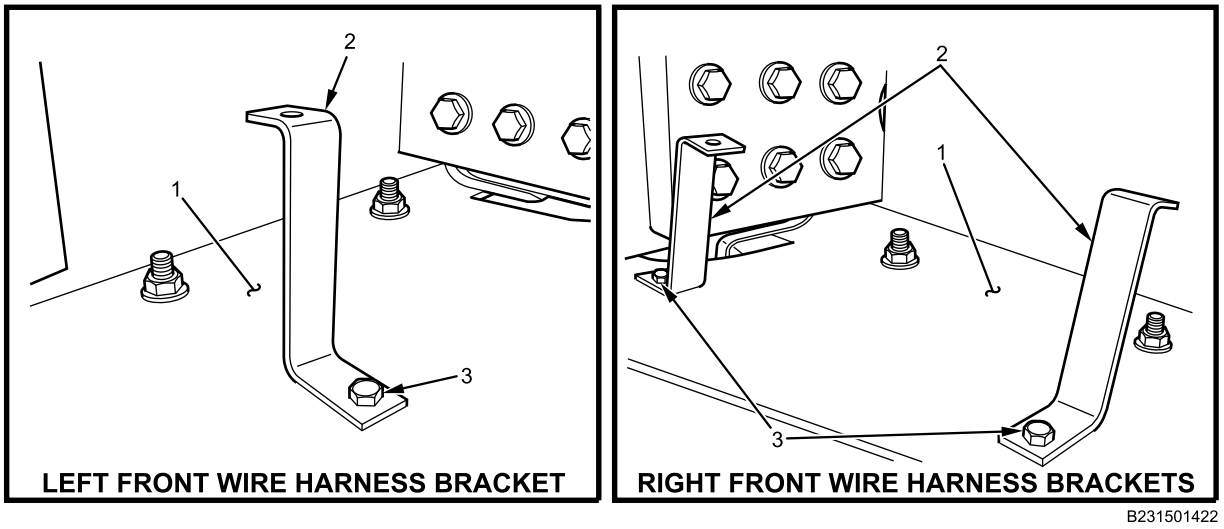

Figure 16. Wire Harness Brackets.

17. Install three wire harness brackets (Figure 16, Item 2) on lower front bumper braces (Figure 16, Item 1) with three bolts (Figure 16, Item 3) and nuts and tighten securely.

END OF TASK

FRONT BUMPER REMOVAL AND INSTALLATION - (CONTINUED)

FOLLOW-ON MAINTENANCE

1. Install 24V trailer hookup (WP 0428).
2. Install infrared light (WP 0368).
3. Install right and left front bumper turn signal and parking light assemblies (WP 0361).
4. Install blackout drive light assemblies (WP 0366).
5. Remove wheel chocks (TM 9-2355-106-10).

END OF TASK

END OF WORK PACKAGE

FIELD MAINTENANCE

WINCH REMOTE CONTROL CONNECTOR SUPPORT REMOVAL AND INSTALLATION

INITIAL SETUP:

Tools and Special Tools
General Mechanic's Tool Kit (GMTK) (WP 0795, Item 37)

References
TM 9-2355-106-10
TM 9-2355-106-24P
WP 0786
WP 0782

Equipment Condition
Parking brake set (TM 9-2355-106-10)
Transmission set in NEUTRAL (N) (TM 9-2355-106-10)
Engine off (TM 9-2355-106-10)
MAIN POWER switch off (TM 9-2355-106-10)
Wheels chocked (TM 9-2355-106-10)

REMOVAL

1. Remove winch remote control connector cover assembly (Figure 1, Item 6) from winch remote control connector (Figure 1, Item 5).

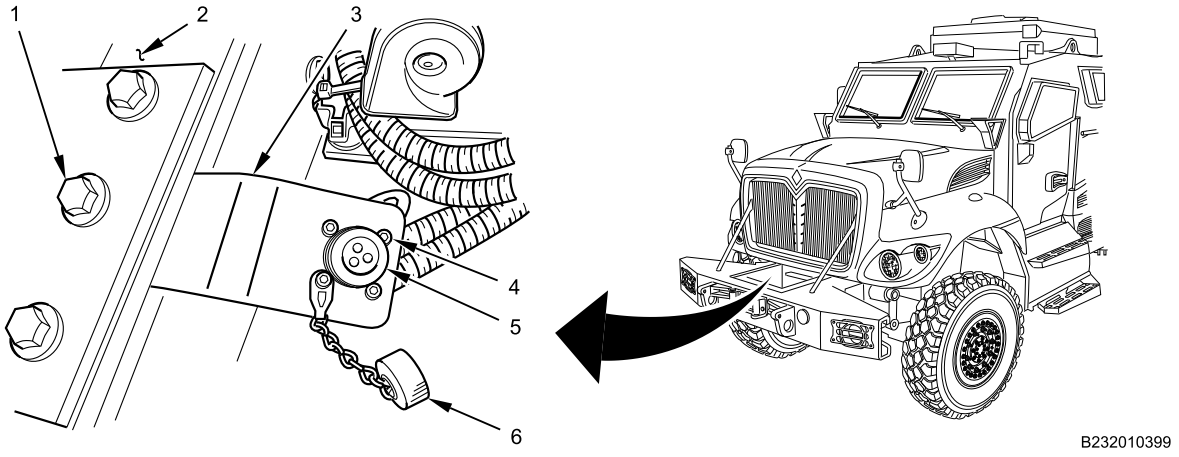

Figure 1. Winch Remote Control Connector.

2. Remove four bolts (Figure 1, Item 4) and nuts from winch remote control connector (Figure 1, Item 5).
3. Remove winch remote control connector (Figure 1, Item 5) and winch remote control cover assembly (Figure 1, Item 6) from winch remote control connector support (Figure 1, Item 3).
4. Remove bolt (Figure 1, Item 1) and nut from winch remote control connector support (Figure 1, Item 3).
5. Remove winch remote control connector support (Figure 1, Item 3) from frame rail (Figure 1, Item 2).

END OF TASK

WINCH REMOTE CONTROL CONNECTOR SUPPORT REMOVAL AND INSTALLATION - (CONTINUED)

INSTALLATION

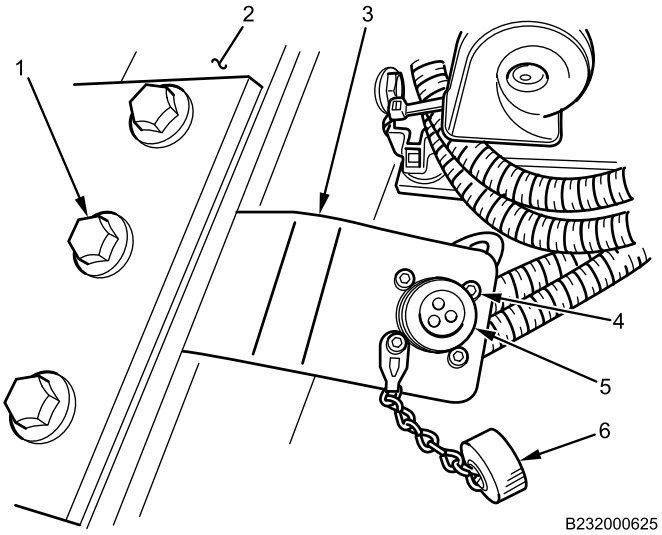

Figure 2. Winch Remote Control Connector.

1. Install winch remote control connector support (Figure 2, Item 3) on frame rail (Figure 2, Item 2) with bolt (Figure 2, Item 1) and nut and tighten securely.
2. Install winch remote control connector (Figure 2, Item 5) and winch remote control connector cover assembly (Figure 2, Item 6) on winch remote control connector support (Figure 2, Item 3) with four bolts (Figure 2, Item 4) and nuts and tighten securely.
3. Install winch remote control connector cover assembly (Figure 2, Item 6) on winch remote control connector (Figure 2, Item 5).

END OF TASK

FOLLOW-ON MAINTENANCE

1. Turn MAIN POWER switch on (TM 9-2355-106-10).
2. Verify operation of winch remote control (TM 9-2355-106-10).
3. Turn MAIN POWER switch off (TM 9-2355-106-10).
4. Remove wheel chocks (TM 9-2355-106-10).

END OF TASK

END OF WORK PACKAGE

FIELD MAINTENANCE

FRONT FRAME CROSSMEMBER AND RADIATOR SUPPORT REMOVAL AND INSTALLATION

INITIAL SETUP:

Tools and Special Tools
General Mechanic's Tool Kit (GMTK) (WP 0795, Item 37)

Materials/Parts
Cable lock strap, button-head - (2) (WP 0796, Item 133)

Personnel Required
Maintainer - (2)

References
TM 9-2355-106-10
TM 9-2355-106-23P
WP 0278
WP 0402
WP 0404
WP 0415
WP 0786
WP 0782

Equipment Condition
Parking brake set (TM 9-2355-106-10)
Transmission set in NEUTRAL (N) (TM 9-2355-106-10)
Engine off (TM 9-2355-106-10)
MAIN POWER switch off (TM 9-2355-106-10)
Wheels chocked (TM 9-2355-106-10)
Batteries disconnected (WP 0404)
Radiator removed (WP 0278)
Winch battery cable junction block and bracket removed (WP 0415)
Horns removed (WP 0402)

REMOVAL

1. Cut button-head cable lock straps (Figure 1, Item 1) from lower radiator crossmember support braces (Figure 1, Item 5). Discard button-head cable lock straps.

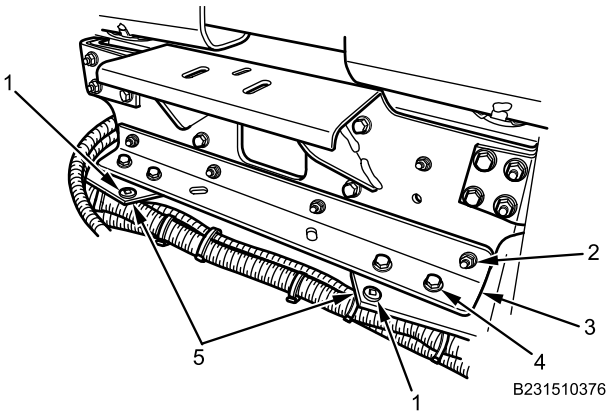

Figure 1. Lower Radiator Crossmember and Button-Head Cable Lock Straps.

2. Remove four bolts (Figure 1, Item 4) and nuts from lower radiator crossmember braces (Figure 1, Item 5).
3. Remove four nuts (Figure 1, Item 2), bolts, and washers from lower radiator crossmember (Figure 1, Item 3).
4. Remove lower radiator crossmember (Figure 1, Item 3) from radiator crossmember braces (Figure 1, Item 5).

FRONT FRAME CROSSMEMBER AND RADIATOR SUPPORT REMOVAL AND INSTALLATION - (CONTINUED)

5. Remove four bolts (Figure 2, Item 10) from radiator support crossmember reinforcements (Figure 2, Item 11).

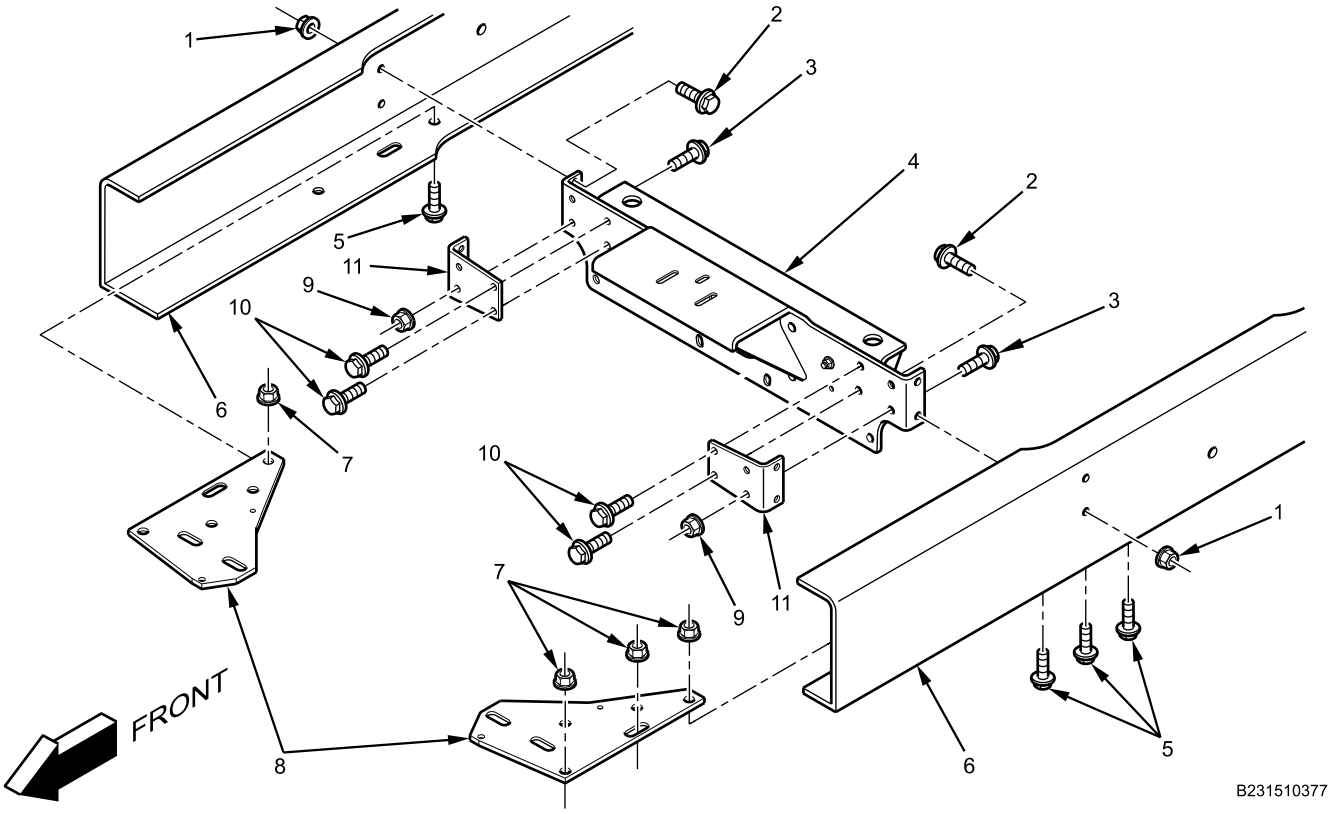

Figure 2. Radiator Support Crossmember.

6. Remove four bolts (Figure 2, Item 3) and nuts (Figure 2, Item 9) from radiator support crossmember (Figure 2, Item 4).
7. Remove four bolts (Figure 2, Item 2) and nuts (Figure 2, Item 1) from radiator support crossmember (Figure 2, Item 4).
8. Remove two radiator support reinforcements (Figure 2, Item 11) and radiator support crossmember assembly (Figure 2, Item 4) from frame rails (Figure 2, Item 6).

FRONT FRAME CROSSMEMBER AND RADIATOR SUPPORT REMOVAL AND INSTALLATION - (CONTINUED)

9. Remove two cable lock strap saddle mounts (Figure 3, Item 1) from right radiator support crossmember brace bolts (Figure 3, Item 2).

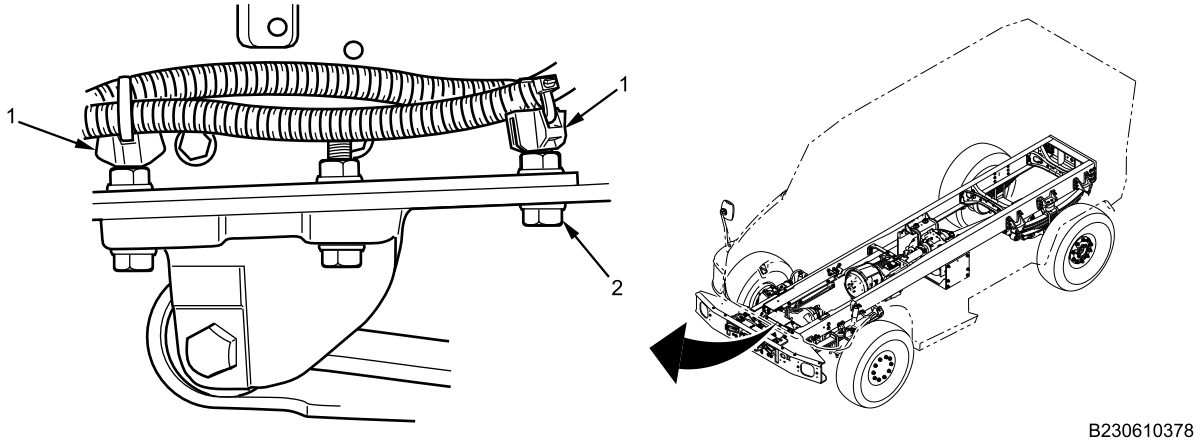

Figure 3. Cable Lock Strap Saddle Mounts on Right Side Radiator Support Crossmember Brace.

NOTE

It may only be necessary to remove nuts in next step. If bolts must be removed, refer to Figure 2.

10. Remove six bolts (Figure 2, Item 5) and nuts (Figure 2, Item 7) from radiator support crossmember braces (Figure 2, Item 8).
11. Remove braces (Figure 2, Item 8) from frame rails (Figure 2, Item 6).

END OF TASK

FRONT FRAME CROSSMEMBER AND RADIATOR SUPPORT REMOVAL AND INSTALLATION - (CONTINUED)

DISASSEMBLY

1. Remove four bolts (Figure 4, Item 6) from radiator support crossmember (Figure 4, Item 1).

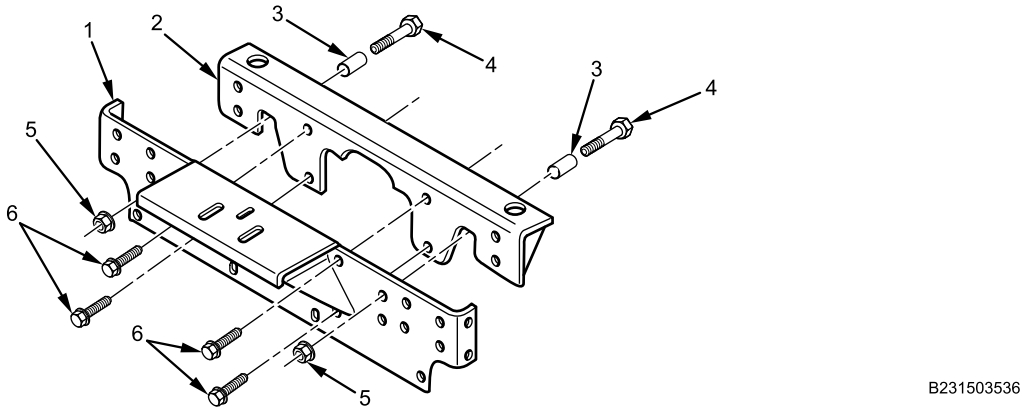

Figure 4. Radiator Support Crossmember and Radiator Support Assembly.

2. Remove two bolts (Figure 4, Item 4), nuts (Figure 4, Item 5), and spacers (Figure 4, Item 3) from radiator support (Figure 4, Item 2).
3. Remove radiator support crossmember (Figure 4, Item 1) from radiator support (Figure 4, Item 2).

END OF TASK

ASSEMBLY

1. Install radiator support (Figure 5, Item 2) on radiator support crossmember (Figure 5, Item 1) with two bolts (Figure 5, Item 4), nuts (Figure 5, Item 5), and spacers (Figure 5, Item 3) and tighten securely.

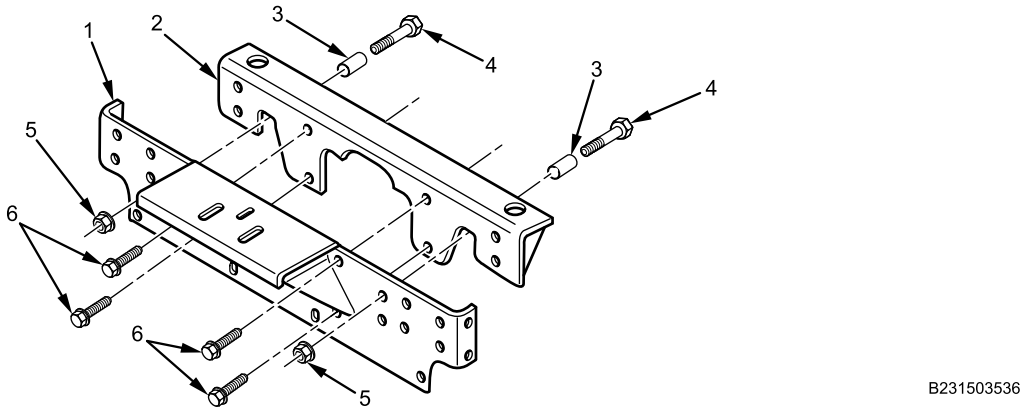

Figure 5. Radiator Support Crossmember and Radiator Support Assembly.

2. Install four bolts (Figure 5, Item 6) on radiator support crossmember (Figure 5, Item 1) and tighten securely.

END OF TASK

FRONT FRAME CROSSMEMBER AND RADIATOR SUPPORT REMOVAL AND INSTALLATION - (CONTINUED)

INSTALLATION

1. Install two radiator support crossmember braces (Figure 6, Item 8) on frame rails (Figure 6, Item 6) with six bolts (Figure 6, Item 5) and nuts (Figure 6, Item 7) and tighten securely.

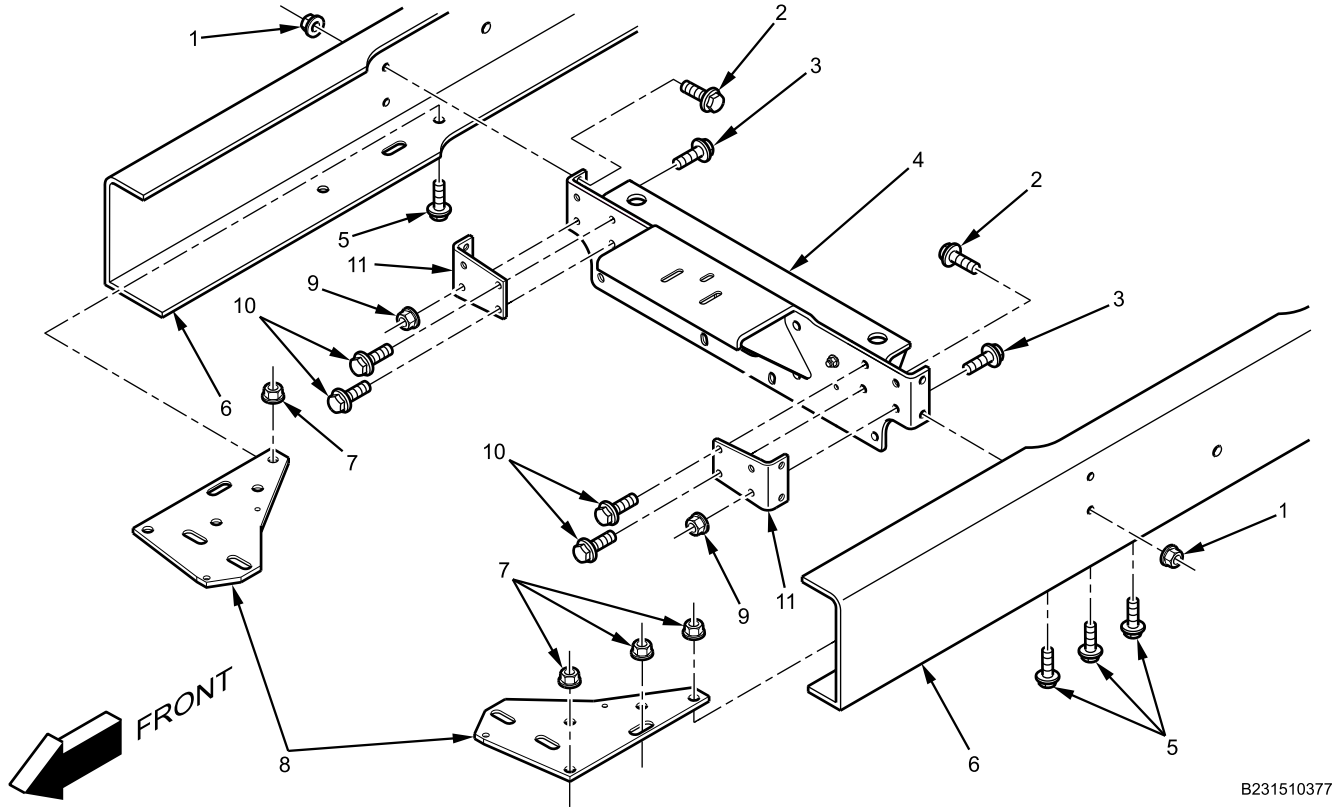

Figure 6. Radiator Support Crossmember.

2. Install two radiator support reinforcements (Figure 6, Item 11) and radiator support crossmember assembly (Figure 6, Item 4) on frame rails (Figure 6, Item 6).
3. Install four bolts (Figure 6, Item 2) and nuts (Figure 6, Item 1) to radiator support crossmember (Figure 6, Item 4). Do not tighten.
4. Install four bolts (Figure 6, Item 3) and nuts (Figure 6, Item 9) to radiator support crossmember (Figure 6, Item 4). Do not tighten.
5. Install four bolts (Figure 6, Item 10) on radiator support reinforcements (Figure 6, Item 11) and tighten securely.
6. Tighten four radiator support reinforcement nuts (Figure 6, Item 9) and bolts (Figure 6, Item 3) securely.
7. Tighten four radiator support reinforcement nuts (Figure 6, Item 1) and bolts (Figure 6, Item 2) securely.

FRONT FRAME CROSSMEMBER AND RADIATOR SUPPORT REMOVAL AND INSTALLATION - (CONTINUED)

8. Install lower radiator support crossmember (Figure 7, Item 2) on radiator support crossmember braces (Figure 7, Item 8) with four bolts (Figure 7, Item 3) and nuts (Figure 7, Item 7). Do not tighten.

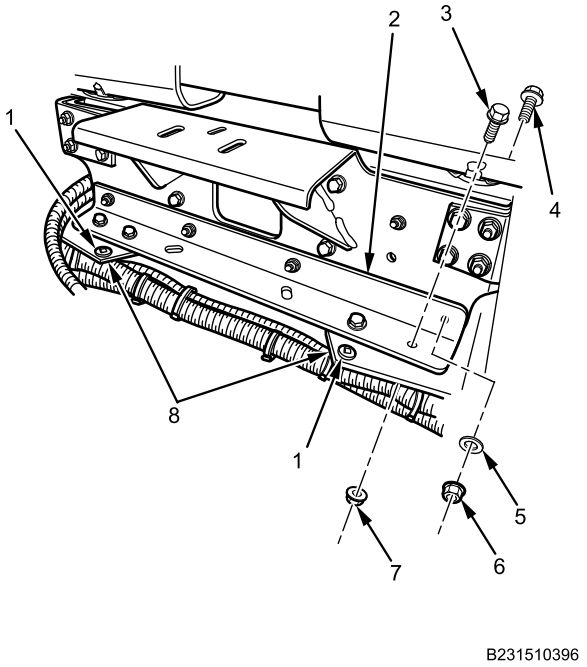

Figure 7. Lower Radiator Crossmember.

9. Install four bolts (Figure 7, Item 4), flat washers (Figure 7, Item 5), and nuts (Figure 7, Item 6) on lower radiator support crossmember (Figure 7, Item 2) and tighten securely.
10. Tighten four lower radiator crossmember bolts (Figure 7, Item 3) and nuts (Figure 7, Item 7) securely.
11. Install new button-head cable lock straps (Figure 7, Item 1) on wire harness and radiator support crossmember braces (Figure 7, Item 5).

FRONT FRAME CROSSMEMBER AND RADIATOR SUPPORT REMOVAL AND INSTALLATION - (CONTINUED)

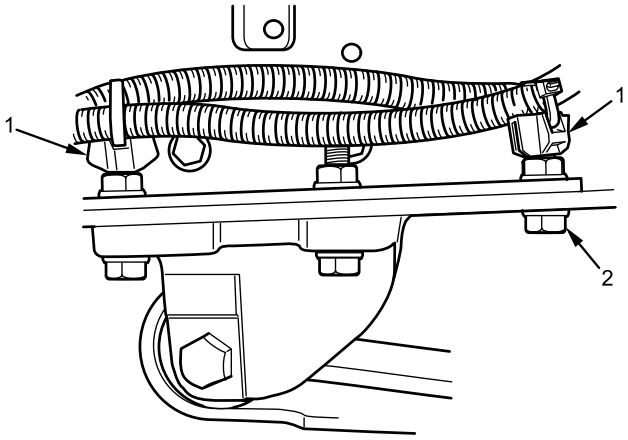

Figure 8. Cable Lock Strap Saddle Mounts on Right Side Radiator Support Crossmember Brace.

12. Install two cable lock strap saddle mounts (Figure 8, Item 1) on right side radiator support crossmember brace bolts (Figure 8, Item 2).

END OF TASK

FOLLOW-ON MAINTENANCE

1. Install horns (WP 0402).
2. Install winch battery cable junction block and bracket (WP 0415).
3. Install radiator (WP 0278).
4. Connect batteries (WP 0404).
5. Turn MAIN POWER switch on (TM 9-2355-106-10).
6. Verify winch operation (TM 9-2355-106-10).
7. Verify horn operation (TM 9-2355-106-10).
8. Turn MAIN POWER switch off (TM 9-2355-106-10).
9. Remove wheel chocks (TM 9-2355-106-10).

END OF TASK

END OF WORK PACKAGE

FIELD MAINTENANCE

FRONT FRAME CROSSMEMBER AND SUPPORT REMOVAL AND INSTALLATION

INITIAL SETUP:

Tools and Special Tools
General Mechanic's Tool Kit (GMTK) (WP 0795, Item 37)

Materials/Parts
Goggles, industrial (WP 0794, Item 20)
Gloves (WP 0794, Item 19)

Personnel Required
Maintainer - (2)

References
TM 9-2355-106-10
TM 9-2355-106-23P
WP 0786
WP 0782

Equipment Condition
Parking brake set (TM 9-2355-106-10)
Transmission set in NEUTRAL (N) (TM 9-2355-106-10)
Engine off (TM 9-2355-106-10)
MAIN POWER switch off (TM 9-2355-106-10)
Wheels chocked (TM 9-2355-106-10)
Winch assembly removed (WP 0678)
Front towing eyes removed (WP 0553)
Front bumper removed (WP 0544)

REMOVAL

WARNING

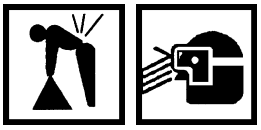

Crossmember assemblies are heavy. Do not attempt to lift crossmember assemblies without assistance from crewmember. Wear safety goggles and work gloves. Failure to comply may result in damage to equipment and serious injury or death to personnel.

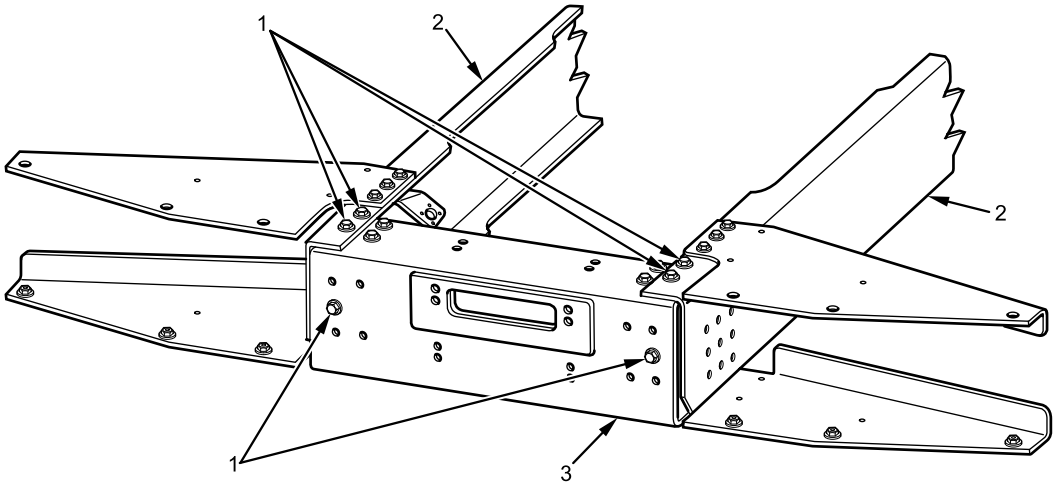

B231501507

Figure 1. Front Frame Crossmember Assembly.

1. Remove six bolts (Figure 1, Item 1) and four nuts from front frame crossmember assembly (Figure 1, Item 3).
2. With assistance, remove front frame crossmember assembly (Figure 1, Item 3) from frame rails (Figure 1, Item 2).

END OF TASK

FRONT FRAME CROSSMEMBER AND SUPPORT REMOVAL AND INSTALLATION - (CONTINUED)

DISASSEMBLY

1. Remove four bolts (Figure 2, Item 1) and nuts from front frame crossmember (Figure 2, Item 3).
2. Remove front frame crossmember supports (Figure 2, Item 2) from front frame crossmember (Figure 2, Item 3).

END OF TASK

ASSEMBLY

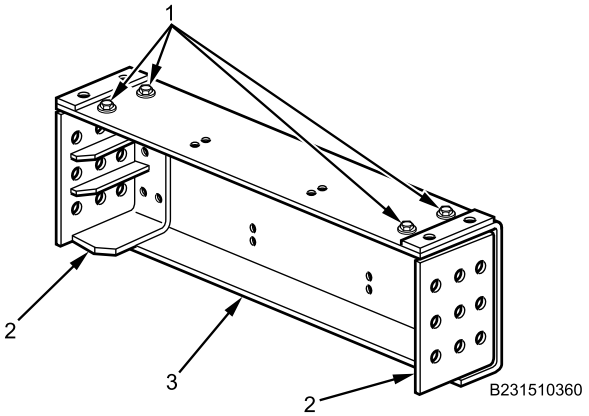

Figure 2. Front Frame Crossmember and Supports.

1. Install front frame crossmember supports (Figure 2, Item 2) on front frame crossmember (Figure 2, Item 3) with four bolts (Figure 2, Item 1) and nuts and tighten securely.

END OF TASK

INSTALLATION

WARNING

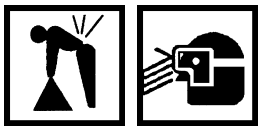

Crossmember assemblies are heavy. Do not attempt to lift crossmember assemblies without assistance from crewmember. Wear safety goggles and work gloves. Failure to comply may result in damage to equipment and serious injury or death to personnel.

FRONT FRAME CROSSMEMBER AND SUPPORT REMOVAL AND INSTALLATION - (CONTINUED)

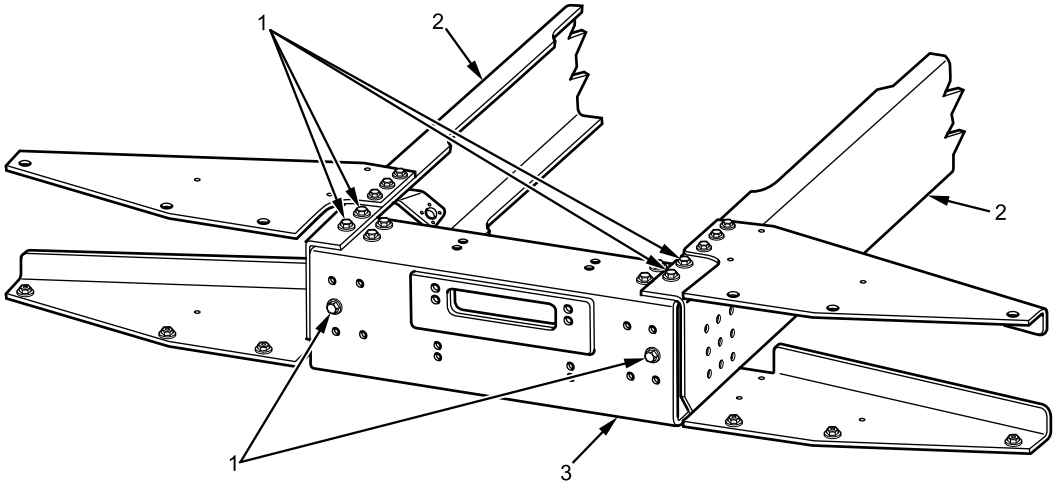

B231501507

Figure 3. Front Frame Crossmember.

1. With assistance, install front frame crossmember assembly (Figure 3, Item 3) on frame rails (Figure 3, Item 2) with six bolts (Figure 3, Item 1) and four nuts and tighten securely.

END OF TASK

FOLLOW-ON MAINTENANCE

1. Install front bumper (WP 0544).
2. Install front towing eyes (WP 0553).
3. Install winch assembly (WP 0678).
4. Turn battery switch on (TM 9-2355-106-10).
5. Verify front turn signal and running light operation (TM 9-2355-106-10).
6. Verify blackout light operation (TM 9-2355-106-10).
7. Verify infrared light operation (TM 9-2355-106-10).
8. Turn MAIN POWER switch off (TM 9-2355-106-10).
9. Remove wheel chocks (TM 9-2355-106-10).

END OF TASK

END OF WORK PACKAGE

FIELD MAINTENANCE

ENGINE MOUNT CROSSMEMBER ASSEMBLY REMOVAL AND INSTALLATION

INITIAL SETUP:

Tools and Special Tools
General Mechanic's Tool Kit (GMTK) (WP 0795, Item 37)
Lifting device (WP 0795, Item 67)
Jackstand, 10-ton, 19–28.5-inches, (2) (WP 0795, Item 62)
Block, filler, wood (WP 0795, Item 20)

Materials/Parts
Goggles, industrial (WP 0794, Item 20)
Gloves (WP 0794, Item 19)
Faceshield, industrial (WP 0794, Item 16)
Locknut - (2) (WP 0796, Item 125)
O-ring - (2) (WP 0796, Item 164)

Personnel Required
Maintainer - (2)

References
TM 9-2355-106-10
TM 9-2355-106-23P
WP 0782

Equipment Condition
Parking brake set (TM 9-2355-106-10)
Transmission set in NEUTRAL (N) (TM 9-2355-106-10)
Engine off (TM 9-2355-106-10)
MAIN POWER switch off (TM 9-2355-106-10)
Wheels chocked (TM 9-2355-106-10)
Engine hood open and secured (TM 9-2355-106-10)
Lower radiator hose removed (WP 0285)
Lower radiator hose elbow removed (WP 0285)
Ether support bracket removed (WP 0273)

WARNING

Engine hood is extremely heavy and requires two-person lift. Ensure that there is adequate space in front of the vehicle to open hood completely without pinning or pinching personnel between hood and any other structure. Use extreme care when working under hood and make sure it is properly supported. Failure to comply may result in serious injury or death to personnel.

Lifting device must have a lifting capacity greater than weight of engine and transmission. Failure to comply may result in injury or death to personnel and damage to equipment.

Do not raise engine with floor jacks. Failure to comply may result in injury or death to personnel and damage to equipment.

Do not place fingers between front motor mount and front crossmember. Failure to comply may result in serious injury to personnel.

Crossmember assemblies are heavy. Do not attempt to lift crossmember assemblies without an assistant. Wear safety goggles and work gloves. Failure to comply may result in damage to equipment and serious injury or death to personnel.

ENGINE MOUNT CROSSMEMBER ASSEMBLY REMOVAL AND INSTALLATION - (CONTINUED)

REMOVAL

1. Attach lifting device to engine front lifting eye (Figure 1, Item 1).

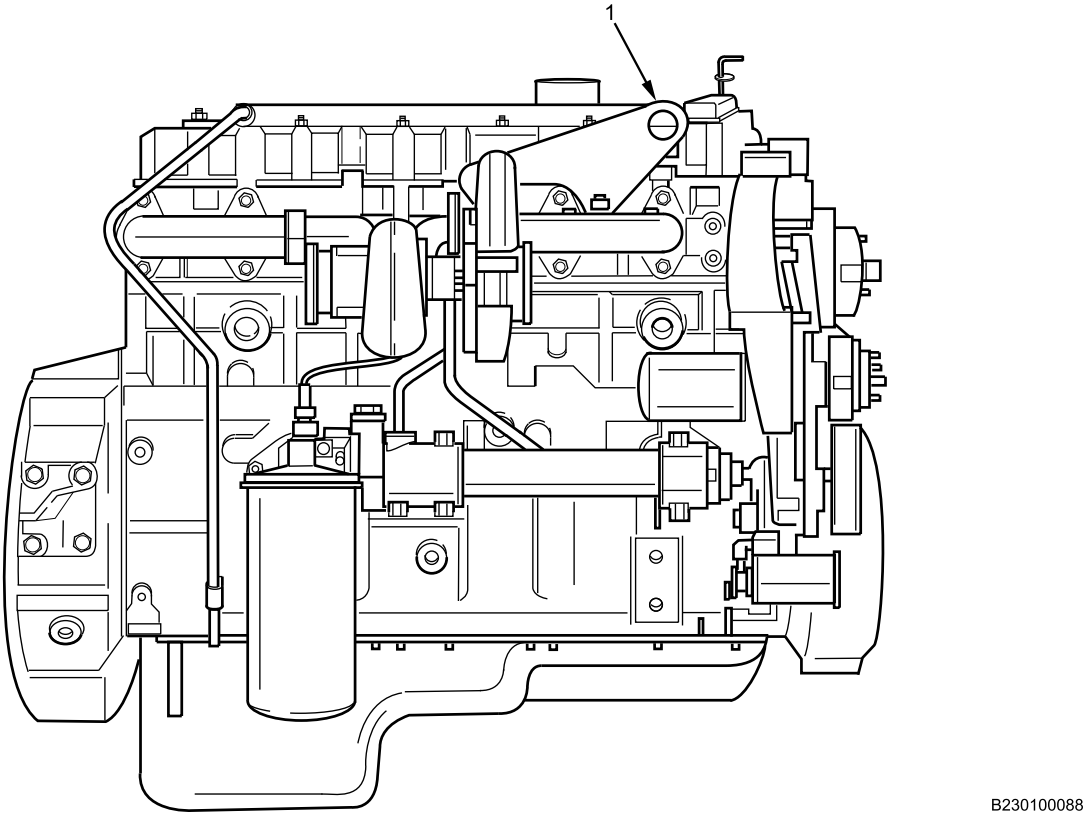

Figure 1. Engine Lifting Eye.

ENGINE MOUNT CROSSMEMBER ASSEMBLY REMOVAL AND INSTALLATION - (CONTINUED)

2. Remove two locknuts (Figure 2, Item 7), flat washers (Figure 2, Item 6), and O-rings (Figure 2, Item 5) from bottom of front crossmember (Figure 2, Item 8). Discard locknuts and O-rings.

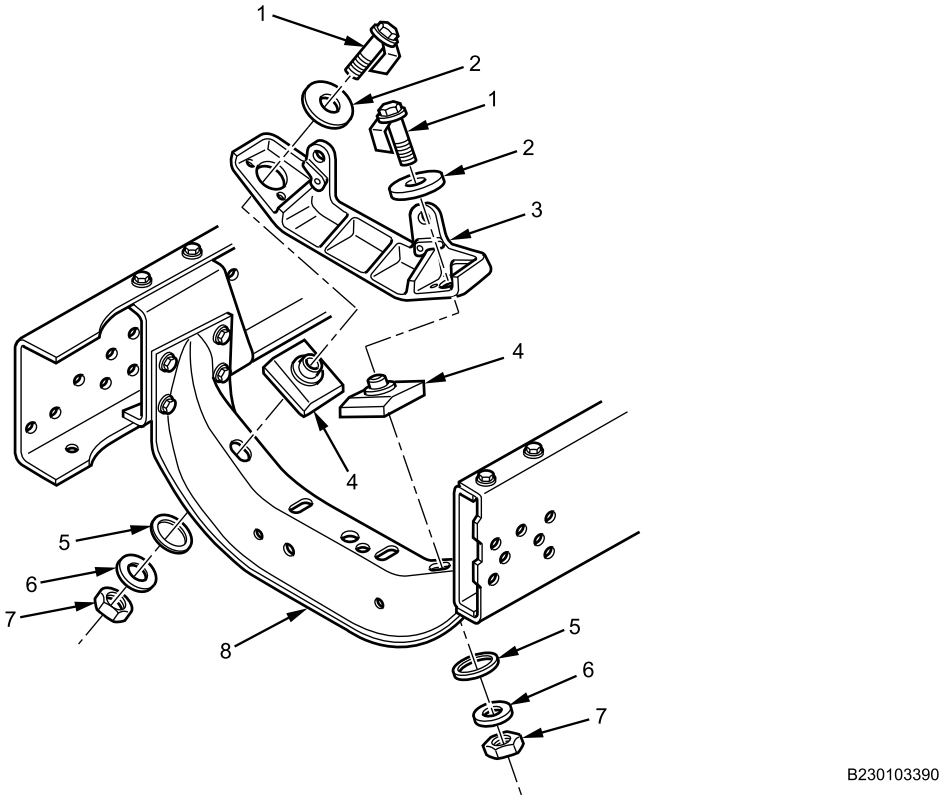

Figure 2. Front Crossmember Engine Mounts.

3. Remove two bolts (Figure 2, Item 1) and insulators (Figure 2, Item 2) from top of front engine mount bracket (Figure 2, Item 3).
4. Raise front of engine so that front engine mount bracket (Figure 2, Item 3) is separated from engine front mount insulators (Figure 2, Item 4).

ENGINE MOUNT CROSSMEMBER ASSEMBLY REMOVAL AND INSTALLATION - (CONTINUED)

NOTE

Retain tension on chain while removing front motor mount and crossmember. The chain will support the engine when mounts and crossmember are removed. The jackstand is positioned for added safety.

5. Position jackstand (Figure 3, Item 1) on wood filler block (Figure 3, Item 3) as far forward as possible, under left side of engine oil pan mounting flange (Figure 3, Item 2) as shown.

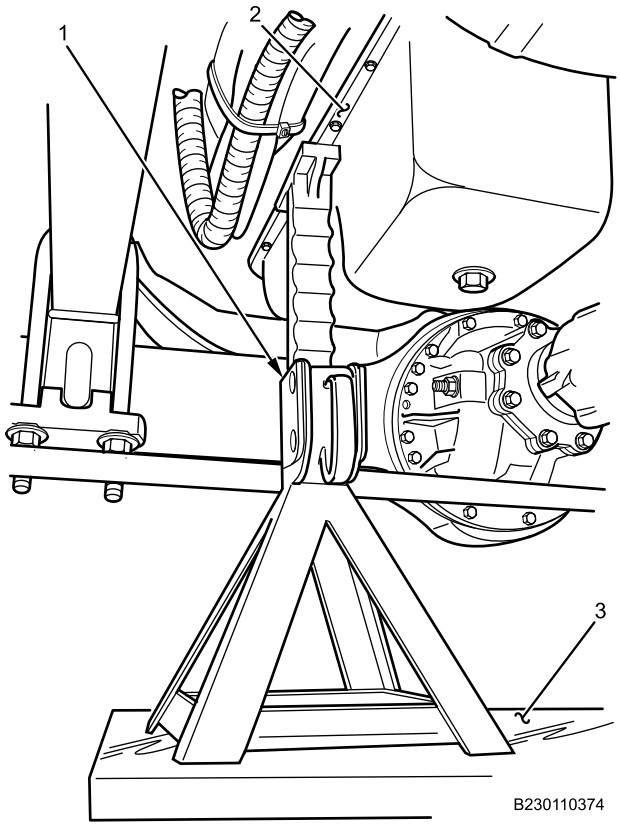

Figure 3. Jackstand Placement.

ENGINE MOUNT CROSSMEMBER ASSEMBLY REMOVAL AND INSTALLATION - (CONTINUED)

6. Remove two engine mount insulators (Figure 4, Item 2) from between crossmember (Figure 4, Item 3) and front engine mount bracket (Figure 4, Item 1).

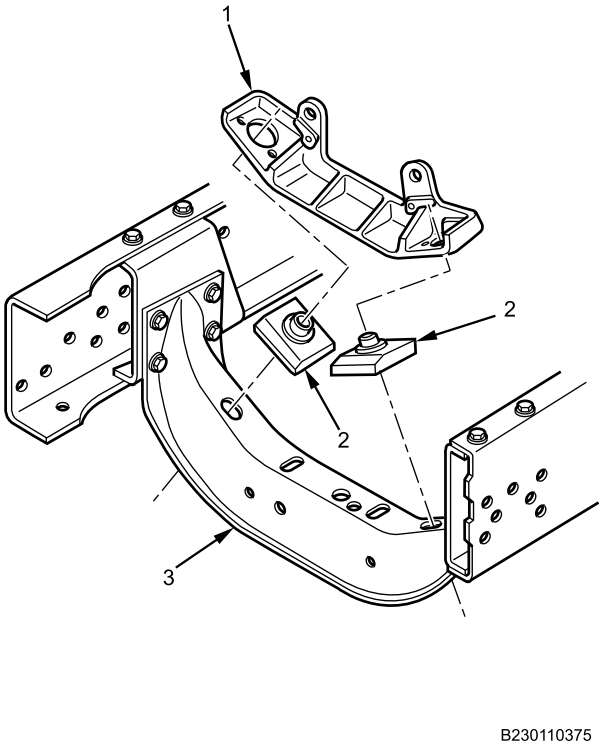

Figure 4. Engine Mount Insulator.

ENGINE MOUNT CROSSMEMBER ASSEMBLY REMOVAL AND INSTALLATION - (CONTINUED)

7. Position jackstand and support engine mount crossmember (Figure 5, Item 3).

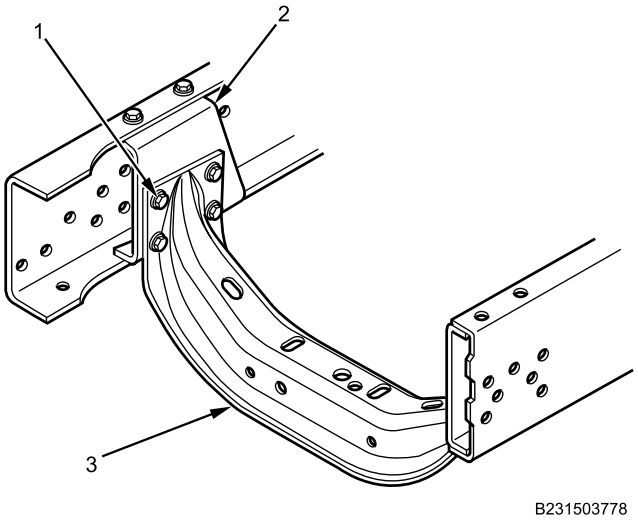

Figure 5. Engine Mount Crossmember Assembly.

8. Remove eight bolts and nuts (Figure 5, Item 1) from engine mount crossmember (Figure 5, Item 3).
9. With assistance, remove crossmember (Figure 5, Item 3) from crossmember supports (Figure 5, Item 2).

END OF TASK

INSTALLATION

1. With assistance, install engine mount crossmember (Figure 6, Item 3) on crossmember supports (Figure 6, Item 2) with eight bolts and nuts (Figure 6, Item 1) and tighten securely.

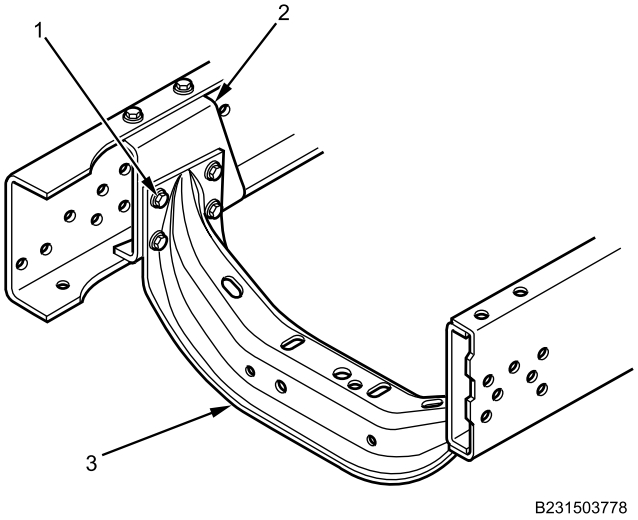

Figure 6. Engine Mount Crossmember Assembly.

ENGINE MOUNT CROSSMEMBER ASSEMBLY REMOVAL AND INSTALLATION - (CONTINUED)

2. Install two engine mount insulators (Figure 7, Item 4) on engine mount crossmember (Figure 7, Item 8).

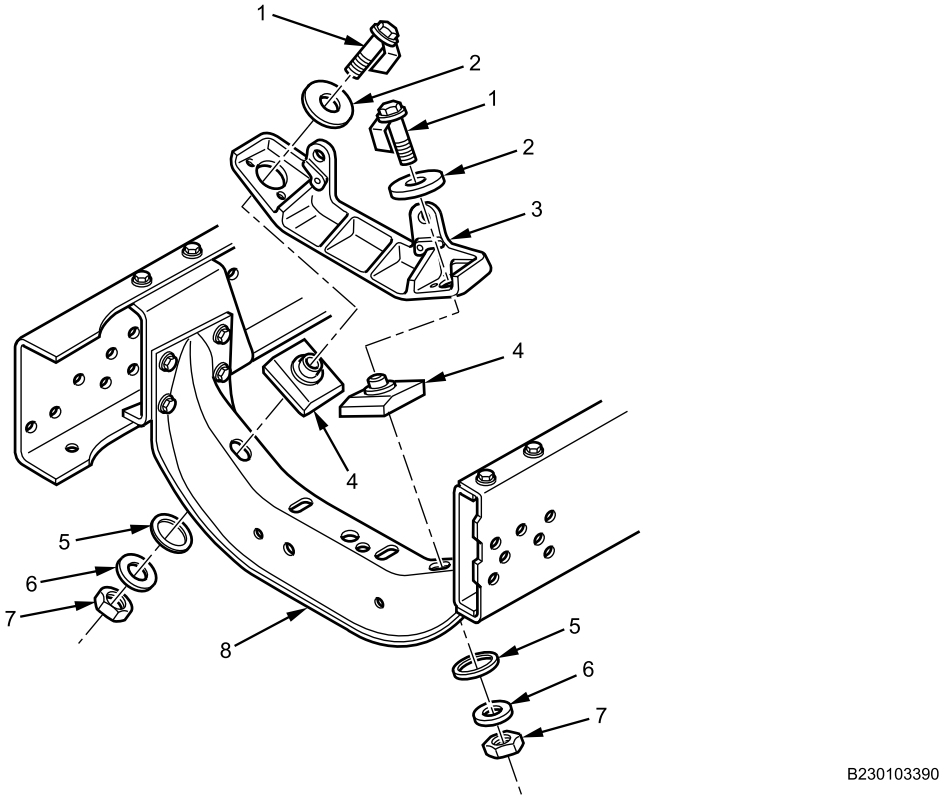

Figure 7. Engine Mount Insulator.

3. Remove jackstand previously installed under engine.
4. Lower front of engine so front motor mount bracket (Figure 7, Item 3) is aligned with engine mount insulators (Figure 7, Item 4) and engine crossmember (Figure 7, Item 8) mounting holes.
5. Install two bolts (Figure 7, Item 1) and insulators (Figure 7, Item 2) into front engine mount bracket (Figure 7, Item 3).
6. Install new O-rings (Figure 7, Item 5), flat washers (Figure 7, Item 6), and new locknuts (Figure 7, Item 7) on bolts (Figure 7, Item 1). Tighten nuts securely.
7. Remove lifting device from vehicle.

END OF TASK

FOLLOW-ON MAINTENANCE

1. Install ether support bracket (WP 0273).
2. Install lower radiator hose elbow (WP 0285).
3. Install lower radiator hose (WP 0285).
4. Remove wheel chocks (TM 9-2355-106-10).

END OF TASK

END OF WORK PACKAGE

FIELD MAINTENANCE

REAR FRAME CROSSMEMBER AND SUPPORT REMOVAL AND INSTALLATION

INITIAL SETUP:

Tools and Special Tools
General Mechanic's Tool Kit (GMTK) (WP 0795, Item 37)

Materials/Parts
Gloves (WP 0794, Item 19)
Goggles, industrial (WP 0794, Item 20)
Cable lock strap, button-head - (2) (WP 0796, Item 133)

Personnel Required
Maintainer - (2)

References
TM 9-2355-106-10
TM 9-2355-106-23P
WP 0786
WP 0782

Equipment Condition
Parking brake set (TM 9-2355-106-10)
Wheels chocked (TM 9-2355-106-10)
Transmission set in NEUTRAL (N) (TM 9-2355-106-10)
Engine off (TM 9-2355-106-10)
MAIN POWER switch off (TM 9-2355-106-10)
Muffler removed (WP 0276)
Towing pintle hook assembly removed (WP 0552)

WARNING

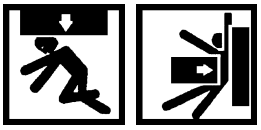

Engine hood is extremely heavy and requires two-person lift. Ensure that there is adequate space in front of the vehicle to open hood completely without pinning or pinching personnel between hood and any other structure. Use extreme care when working under hood and make sure it is properly supported. Failure to comply may result in serious injury or death to personnel.

NOTE

Views in figures show either left side or right side. Procedures are the same for both sides.

REAR FRAME CROSSMEMBER AND SUPPORT REMOVAL AND INSTALLATION - (CONTINUED)

REMOVAL

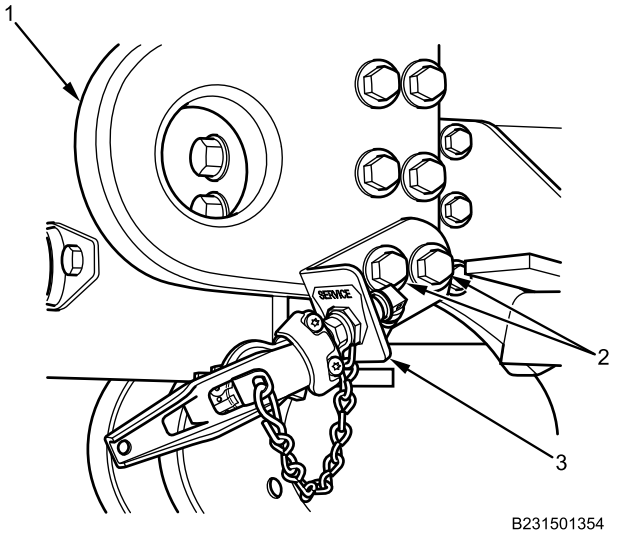

Figure 1. Side View of Right Rear Towing Eye.

1. Remove four bolts (Figure 1, Item 2) and nuts from gladhands (Figure 1, Item 3).
2. Remove gladhands (Figure 1, Item 3) from towing eyes (Figure 1, Item 1).

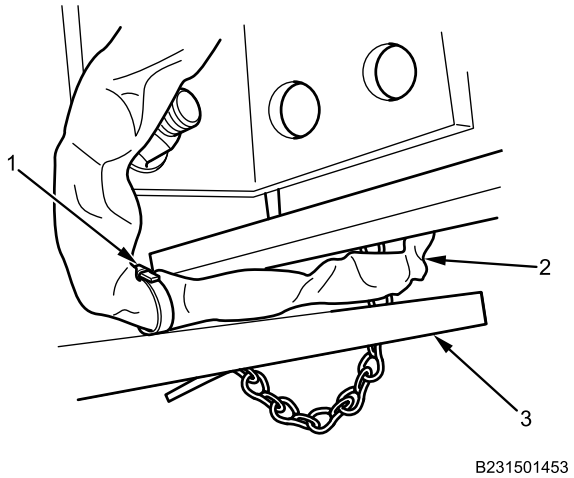

Figure 2. Left Gladhand Cable Tie Location.

3. Cut button-head cable lock straps (Figure 2, Item 1) from gladhand air lines (Figure 2, Item 2). Discard button-head cable lock straps (Figure 2, Item 1).
4. Remove gladhand air lines (Figure 2, Item 2) from rear frame crossmember (Figure 2, Item 3).

REAR FRAME CROSSMEMBER AND SUPPORT REMOVAL AND INSTALLATION - (CONTINUED)

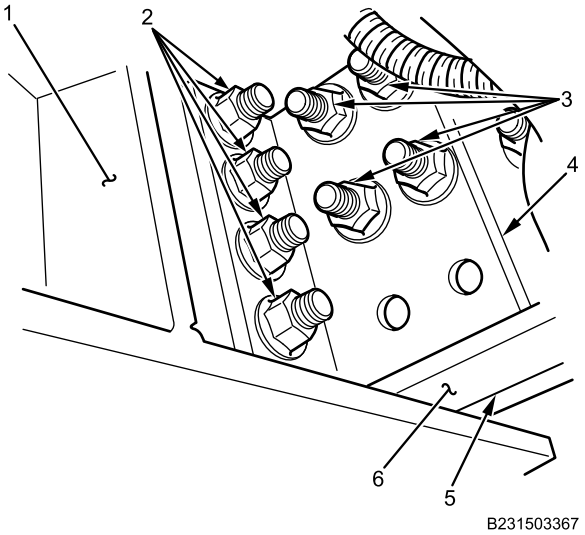

Figure 3. Backside of Rear Frame Crossmember and Left Support.

WARNING

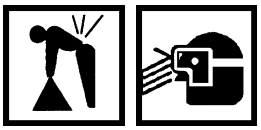

Crossmember assemblies are heavy. Do not attempt to lift crossmember assemblies without assistance from crewmember. Wear safety goggles and work gloves. Failure to comply may result in damage to equipment and serious injury or death to personnel.

Towing eyes are heavy. Ensure towing eyes do not fall when removing fasteners. Failure to comply may result in damage to equipment and serious injury to personnel.

Rear frame crossmember supports are heavy. Ensure rear frame crossmember supports do not fall when removing fasteners. Failure to comply may result in damage to equipment and serious injury to personnel.

5. With assistance, support rear frame crossmember (Figure 3, Item 1) and remove eight bolts and nuts (Figure 3, Item 2) from rear frame crossmember.
6. With assistance, remove rear frame crossmember (Figure 3, Item 1) from rear frame crossmember supports (Figure 3, Item 4).
7. Remove eight bolts and nuts (Figure 3, Item 3) from rear frame crossmember supports (Figure 3, Item 4).
8. Remove towing eyes (Figure 1, Item 1) and rear frame crossmember supports (Figure 3, Item 4) from frame rails (Figure 3, Item 6).

END OF TASK

REAR FRAME CROSSMEMBER AND SUPPORT REMOVAL AND INSTALLATION - (CONTINUED)

INSTALLATION

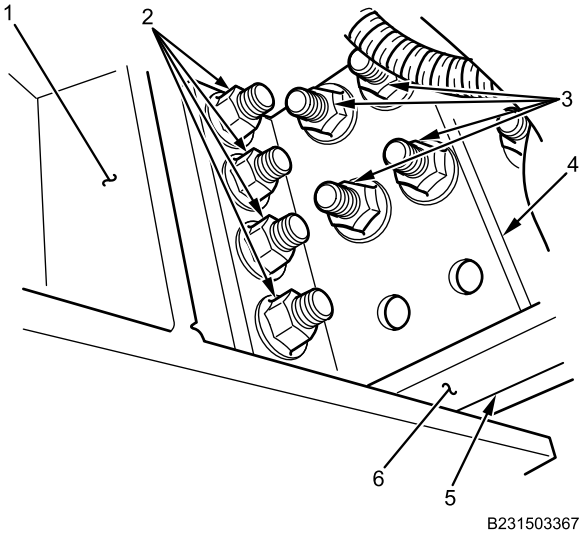

Figure 4. Backside of Rear Frame Crossmember and Left Support.

1. Install rear frame crossmember supports (Figure 4, Item 4) and towing eyes (Figure 4, Item 5) on frame rails (Figure 4, Item 6) with eight bolts and nuts (Figure 4, Item 3). Do not tighten.
2. With assistance, install rear frame crossmember (Figure 4, Item 1) on rear frame crossmember supports (Figure 4, Item 4) with eight bolts and nuts (Figure 4, Item 2). Do not tighten.
3. Align rear frame crossmember (Figure 4, Item 1) and tighten 16 bolts and nuts (Figure 4, Item 2 and 3) securely.

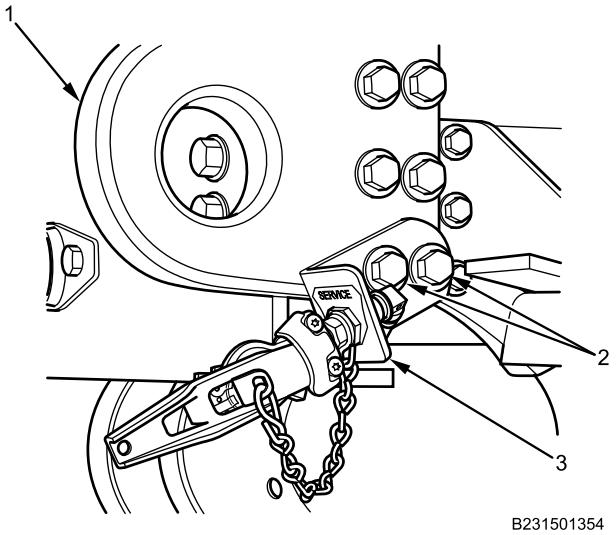

Figure 5. Side View of Right Rear Towing Eye.

4. Install gladhands (Figure 5, Item 3) on towing eyes (Figure 5, Item 1) with four bolts (Figure 5, Item 2) and nuts and tighten securely.

REAR FRAME CROSSMEMBER AND SUPPORT REMOVAL AND INSTALLATION - (CONTINUED)

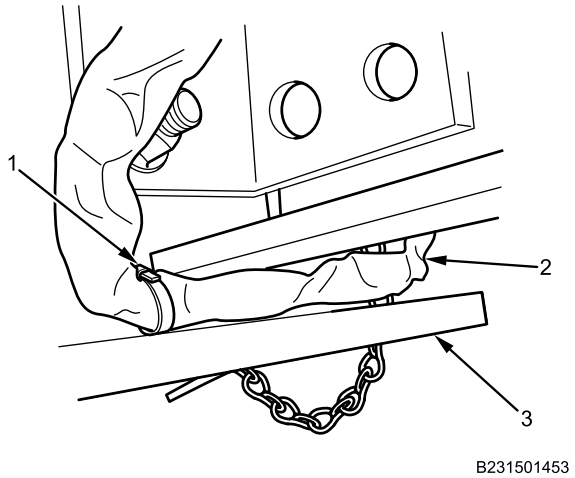

Figure 6. Left Gladhand Cable Tie Location.

5. Install gladhand air lines (Figure 6, Item 2) on rear frame crossmember (Figure 6, Item 3) with new button-head cable lock straps (Figure 6, Item 1) and tighten securely.

END OF TASK

FOLLOW-ON MAINTENANCE

1. Install towing pintle hook assembly (WP 0552).
2. Install muffler (WP 0276).
3. Remove wheel chocks (TM 9-2355-106-10).

END OF TASK

END OF WORK PACKAGE

FIELD MAINTENANCE

HARNESS SUPPORT BRACKET REMOVAL AND INSTALLATION

INITIAL SETUP:

Tools and Special Tools
General Mechanic's Tool Kit (GMTK) (WP 0795, Item 37)

Materials/Parts
Compound (WP 0794, Item 13)
Cable lock strap - (2) (WP 0796, Item 133)
Cable lock strap - (3) (WP 0796, Item 124)
Goggles, industrial (WP 0794, Item 20)
Faceshield, industrial (WP 0794, Item 16)
Gloves (WP 0794, Item 18)

Personnel Required
Maintainer - (2)

References
TM 9-2355-106-10
TM 9-2355-106-23P
WP 0782

Equipment Condition
Parking brake set (TM 9-2355-106-10)
Transmission set in NEUTRAL (N) (TM 9-2355-106-10)
Engine off (TM 9-2355-106-10)
MAIN POWER switch off (TM 9-2355-106-10)
Wheels chocked (TM 9-2355-106-10)
Belly armor removed (WP 0606)

REMOVAL

NOTE

Harness support bracket is located between frame rails, above transmission-to-transfer case driveshaft.

1. Remove and discard cable lock straps (Figure 1, Item 1 through 5) from harness support bracket (Figure 1, Item 6) and harness bundle (Figure 1, Item 7).

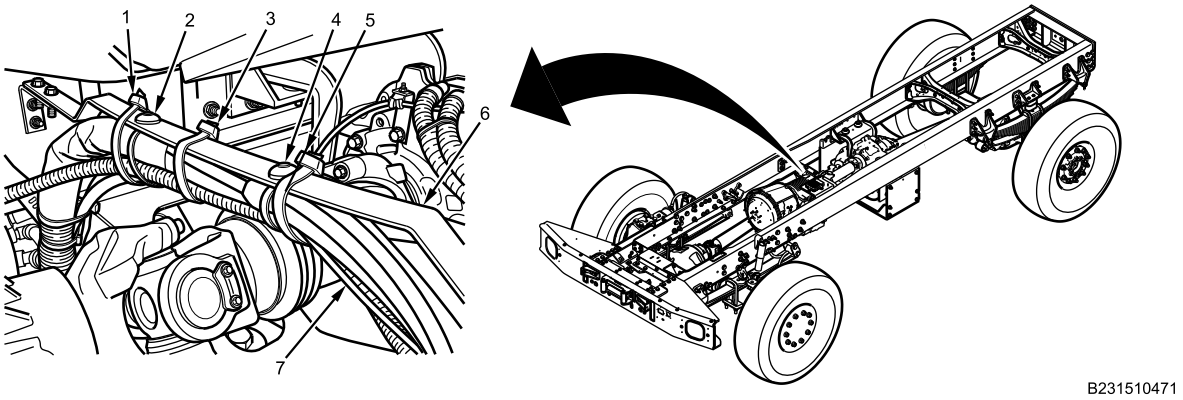

Figure 1. Harness Support Bracket.

HARNESS SUPPORT BRACKET REMOVAL AND INSTALLATION - (CONTINUED)

NOTE

Right harness support bracket frame brace bolts are located behind the battery tray right side.

2. Remove nuts (Figure 2, Item 4) from harness support bracket bolts (Figure 2, Item 2).
3. Remove harness support bracket bolts (Figure 2, Item 2) from harness support bracket (Figure 2, Item 3) and right harness support bracket frame brace (Figure 2, Item 1).
4. On inner frame rail, remove nuts (Figure 2, Item 5) from right harness support bracket frame brace (Figure 2, Item 1).

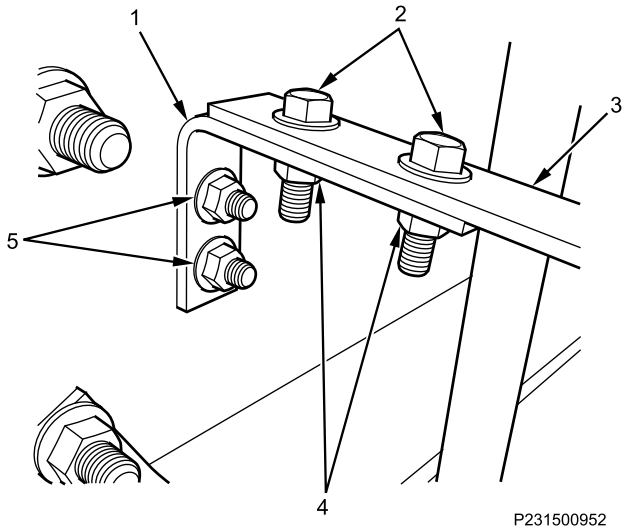

Figure 2. Right Harness Support Bracket Frame Brace.

5. On outer frame rail behind battery tray (Figure 3, Item 2), have assistant hold right harness support bracket frame brace bolts (Figure 3, Item 1) to prevent rotation.
6. Remove right harness support bracket frame brace bolts (Figure 3, Item 1) and right harness support bracket frame brace (Figure 2, Item 1).

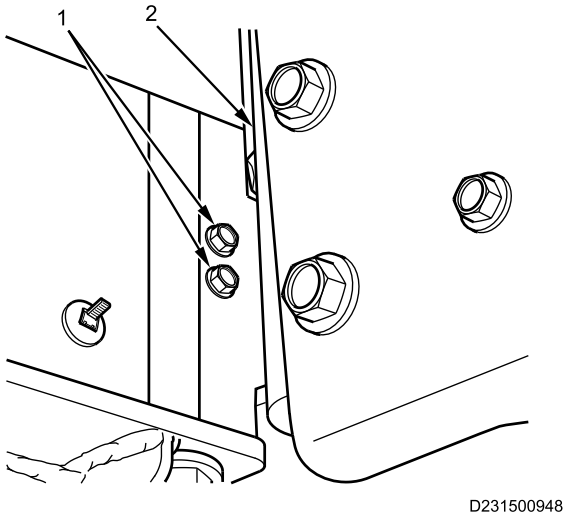

Figure 3. Right Harness Support Bracket Frame Brace Bolts.

HARNESS SUPPORT BRACKET REMOVAL AND INSTALLATION - (CONTINUED)

NOTE

Left harness support bracket frame brace bolts are located behind the fuel tank left side.

7. On outer frame rail behind fuel tank (Figure 4, Item 1), have assistant hold left harness support bracket frame brace bolts (Figure 4, Item 2) to prevent rotation.

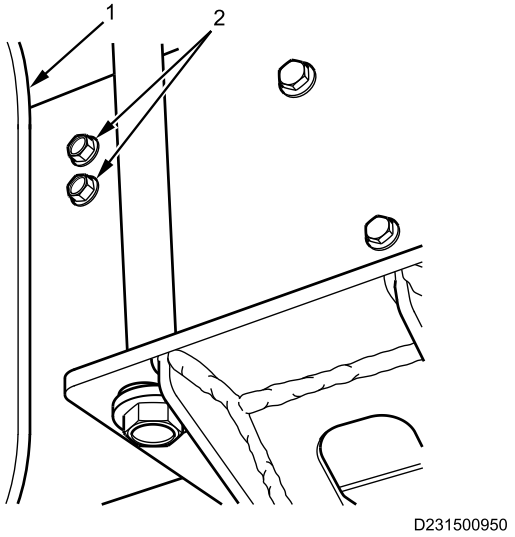

Figure 4. Left Harness Support Bracket Frame Brace Bolts.

HARNESS SUPPORT BRACKET REMOVAL AND INSTALLATION - (CONTINUED)

8. On inner frame rail, remove nuts (Figure 5, Item 4) from left harness support bracket frame brace (Figure 5, Item 3).

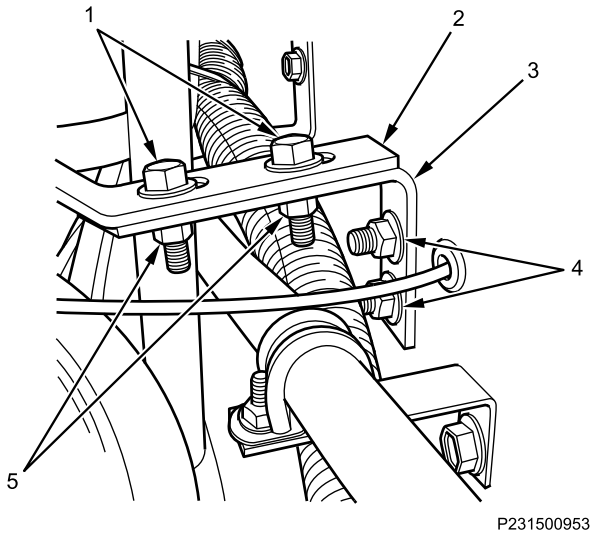

Figure 5. Left Harness Support Bracket Frame Brace.

9. Remove harness support bracket (Figure 5, Item 2) and brace (Figure 5, Item 3) from vehicle.
10. Remove left harness support bracket nuts and bolts (Figure 5, Item 1) to separate left harness support bracket (Figure 5, Item 2) from frame brace (Figure 5, Item 3).

END OF TASK

INSTALLATION

WARNING

Corrosion preventive compound is toxic. Use only in well-ventilated area. Do not get in eyes; wear chemical safety goggles and full-face shield when using. Avoid contact with skin and wear rubber or plastic, solvent-resistant gloves. In case of contact, remove contaminated clothing and immediately wash area with soap and water. If compound contacts eyes, flush eyes with large amounts of water for at least 15 minutes and get immediate medical attention. If swallowed, do not induce vomiting; contact a physician immediately. Failure to comply may result in serious injury or death to personnel.

1. Apply corrosion preventive compound to brace bolts (Figure 7, Item 2), brace nuts (Figure 6, Item 4), bracket bolts (Figure 6, Item 1), and nuts (Figure 6, Item 5).

HARNESS SUPPORT BRACKET REMOVAL AND INSTALLATION - (CONTINUED)

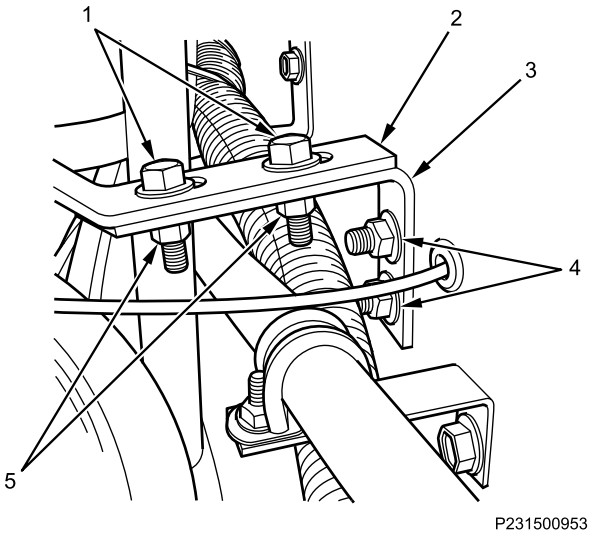

Figure 6. Left Harness Support Bracket Frame Brace.

2. On inner frame rail, install brace (Figure 6, Item 3) and nuts (Figure 6, Item 4) on brace bolts (Figure 7, Item 2). Tighten nuts securely.
3. Install harness support bracket (Figure 6, Item 2) on brace (Figure 6, Item 3) with bolts (Figure 6, Item 1).
4. On outer frame rail behind fuel tank (Figure 7, Item 1), have maintainer install and hold brace bolts (Figure 7, Item 2) to prevent rotation.

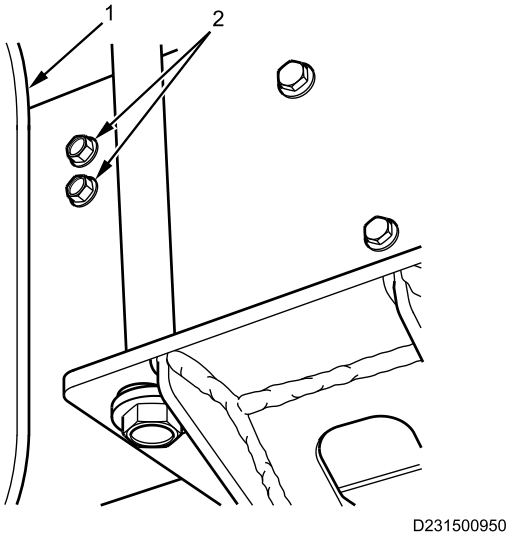

Figure 7. Left Harness Support Bracket Frame Brace Bolts.

5. Loosely install nuts (Figure 6, Item 5) on bracket bolts (Figure 6, Item 1).

HARNESS SUPPORT BRACKET REMOVAL AND INSTALLATION - (CONTINUED)

6. On outer frame rail behind battery tray (Figure 8, Item 2), have maintainer install and hold brace bolts (Figure 8, Item 1) to prevent rotation.
7. Apply corrosion preventive compound to brace bolts (Figure 8, Item 1), brace nuts (Figure 9, Item 5), bracket bolts (Figure 9, Item 2), and nuts (Figure 9, Item 4).

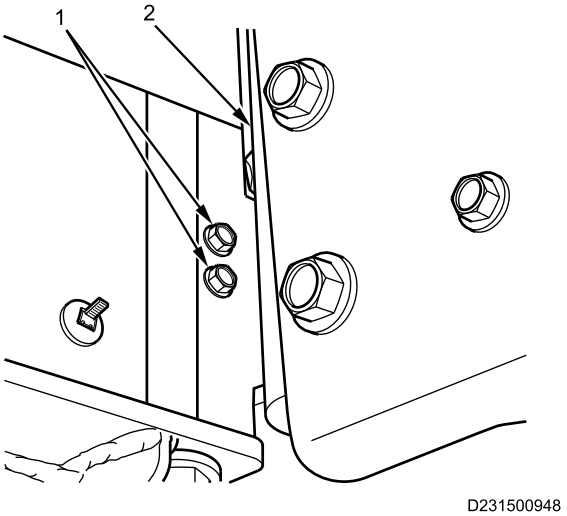

Figure 8. Right Harness Support Bracket Frame Brace Bolts.

8. On inner frame rail, install brace (Figure 9, Item 1) and nuts (Figure 9, Item 5) on brace bolts (Figure 8, Item 1). Tighten nuts securely.

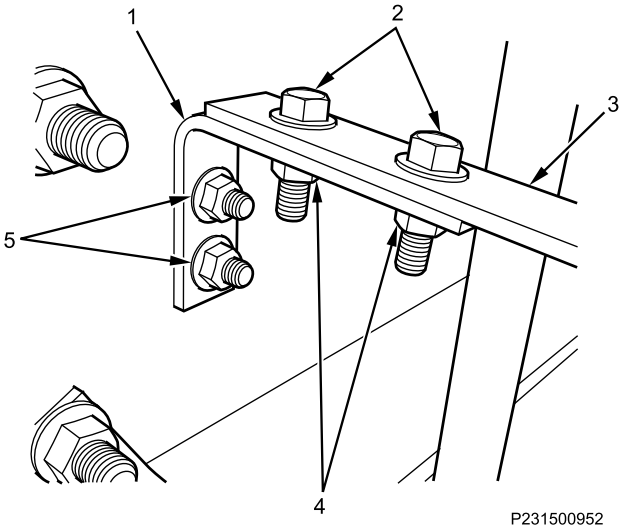

Figure 9. Right Harness Support Bracket Frame Brace.

9. Install harness support bracket (Figure 9, Item 3) on brace (Figure 9, Item 1) with bolts (Figure 9, Item 2).
10. Install nuts (Figure 9, Item 4) on bracket bolts (Figure 9, Item 2). Tighten all bracket bolts securely.

HARNESS SUPPORT BRACKET REMOVAL AND INSTALLATION - (CONTINUED)

11. Install new cable lock straps (Figure 10, Item 1 through 5) on harness support bracket (Figure 10, Item 6) and harness bundle (Figure 10, Item 7).

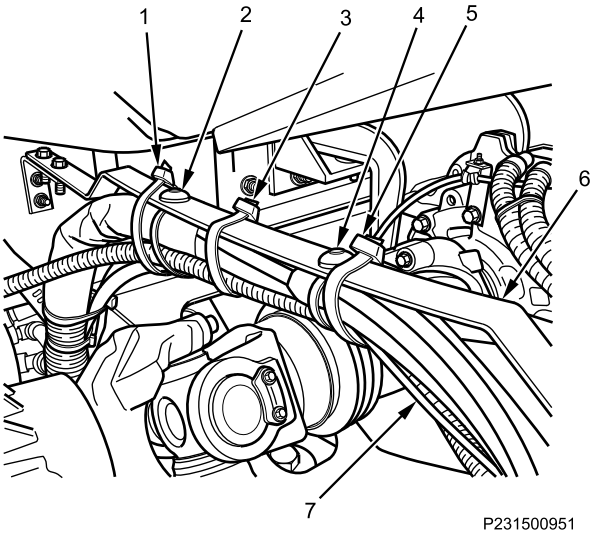

Figure 10. Harness Support Bracket.

END OF TASK

FOLLOW-ON MAINTENANCE

1. Install belly armor (WP 0606).
2. Remove wheel chocks (TM 9-2355-106-10).

END OF TASK

END OF WORK PACKAGE

FIELD MAINTENANCE

REAR TOWING EYE REMOVAL AND INSTALLATION

INITIAL SETUP:

Tools and Special Tools
General Mechanic's Tool Kit (GMTK) (WP 0795, Item 37)
Wrench, Combination, Standard Length, 12PT, 1-1/8”, Chrome (WP 0795, Item 137)
Wrench, Torque, 90-600 lb-ft, 3/4-inch drive (WP 0795, Item 144)

References
TM 9-2355-106-10
TM 9-2355-106-23P
WP 0786
WP 0782

Equipment Condition
Parking brake set (TM 9-2355-106-10)
Transmission set in NEUTRAL (N) (TM 9-2355-106-10)
Engine off (TM 9-2355-106-10)
MAIN POWER switch off (TM 9-2355-106-10)
Wheels chocked (TM 9-2355-106-10)
Muffler removed (WP 0276)

REMOVAL

WARNING

Do not remove both rear towing eyes at the same time, Entire rear frame crossmember assembly will fall. Replace one towing eye at a time. Failure to comply may result in damage to equipment and serious injury or death to personnel.

REAR TOWING EYE REMOVAL AND INSTALLATION - (CONTINUED)

NOTE

Right side shown; left side similar.

1. Remove two bolts (Figure 1, Item 3) and nuts that attach gladhand (Figure 1, Item 5) to towing eye (Figure 1, Item 1).

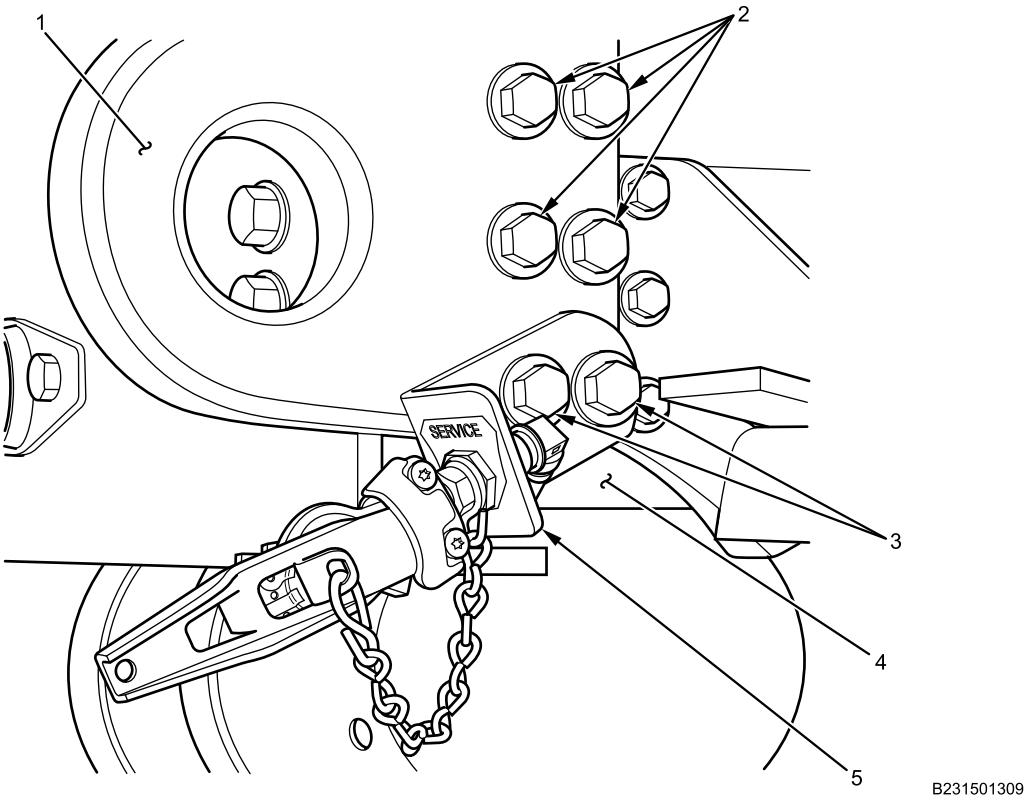

Figure 1. Side View of Right Rear Towing Eye.

WARNING

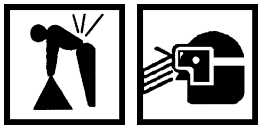

Towing eyes are heavy. Ensure towing eyes do not fall when removing fasteners. Failure to comply may result in damage to equipment and serious injury to personnel.

2. Remove four bolts (Figure 1, Item 2) and nuts that attach towing eye (Figure 1, Item 1) to frame rail (Figure 1, Item 4).
3. Remove towing eye (Figure 1, Item 1) from frame rail (Figure 1, Item 4).

END OF TASK

REAR TOWING EYE REMOVAL AND INSTALLATION - (CONTINUED)

INSTALLATION

1. Install towing eye (Figure 2, Item 1) on frame rail (Figure 2, Item 4) and loosely install four bolts (Figure 2, Item 2) and nuts.

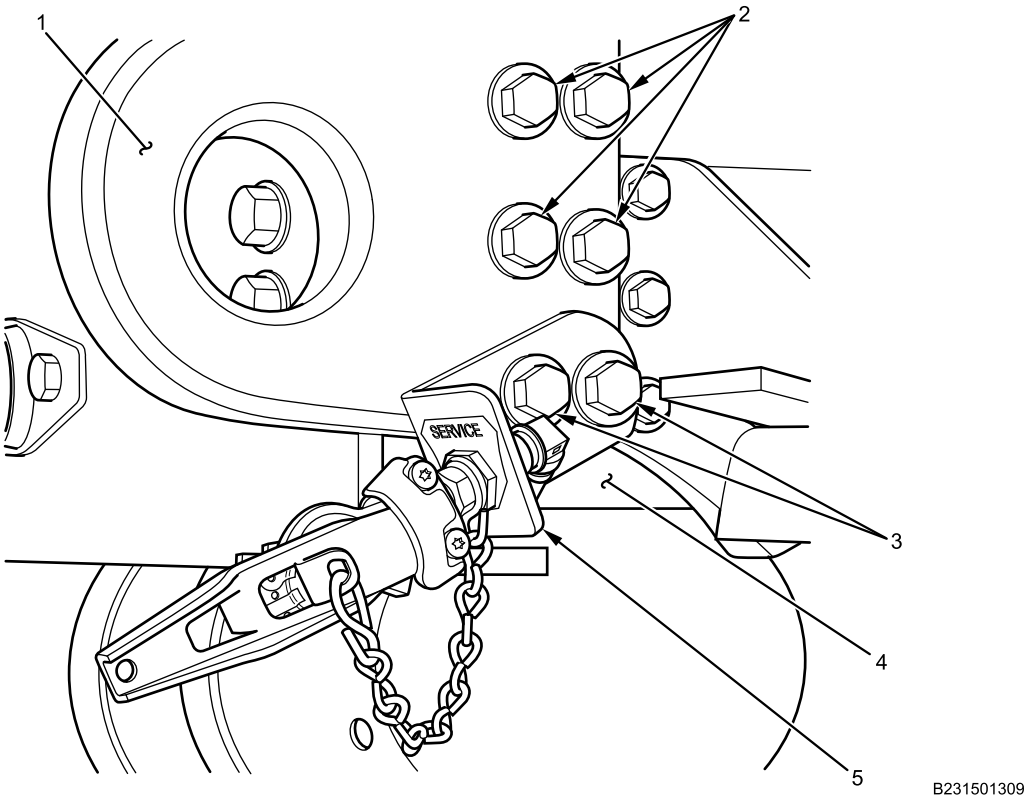

Figure 2. Side View of Right Rear Towing Eye.

2. Install gladhand (Figure 2, Item 5) on towing eye (Figure 2, Item 1) and install two bolts (Figure 2, Item 3) and nuts.
3. Torque six bolts (Figure 2, Item 2 and 3) to 350-375 lb-ft (475-508 N•m)

END OF TASK

FOLLOW-ON MAINTENANCE

1. Install muffler (WP 0276).
2. Remove wheel chocks (TM 9-2355-106-10).

END OF TASK

END OF WORK PACKAGE

FIELD MAINTENANCE

TOWING PINTLE HOOK REMOVAL AND INSTALLATION

INITIAL SETUP:

Tools and Special Tools
General Mechanic's Tool Kit (GMTK) (WP 0795, Item 37)
Bar, breaker, 3/4-inch drive, chrome (WP 0795, Item 13)
Grease gun, pneumatic (WP 0795, Item 41)
Socket, deep well, 1/2-inch drive, 12 pt, 1-1/2 inch, chrome (WP 0795, Item 102)
Socket, standard, 3/4-inch drive, 12 pt, 2-1/4 inch, chrome (WP 0795, Item 110)
Wrench, combination, standard length, 12 pt, 1-1/8 inch, chrome (WP 0795, Item 137)
Wrench, combination, standard length, 12 pt, 1-1/2 inch, chrome (WP 0795, Item 135)

Materials/Parts
Rag (WP 0794, Item 39)
Cotter pin (WP 0796, Item 5)
Cotter pin - (2) (WP 0796, Item 6)
Locknut - (2) (WP 0796, Item 12)
Grease (WP 0794, Item 21)

Personnel Required
Maintainer - (2)

References
TM 9-2355-106-10
TM 9-2355-106-23P
WP 0786
WP 0782

Equipment Condition
Parking brake set (TM 9-2355-106-10)
Transmission set in NEUTRAL (N) (TM 9-2355-106-10)
Engine off (TM 9-2355-106-10)
MAIN POWER switch off (TM 9-2355-106-10)
Wheels chocked (TM 9-2355-106-10)
Muffler removed (WP 0276)

REMOVAL

WARNING

Towing pintle hook is heavy. Ensure pintle hook does not fall when removing fasteners. Failure to comply may result in damage to equipment and serious injury to personnel.

TOWING PINTLE HOOK REMOVAL AND INSTALLATION - (CONTINUED)

1. Remove cotter pin (Figure 1, Item 2) from towing pintle hook pivot bolt (Figure 1, Item 3). Discard cotter pin.

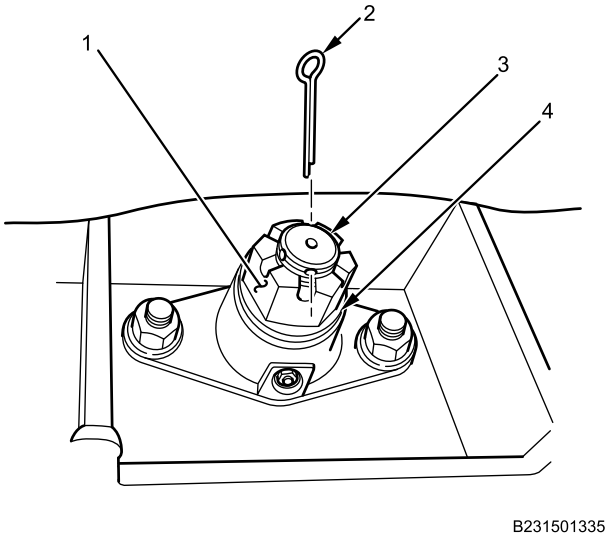

Figure 1. Towing Pintle Hook Assembly from Backside of Rear Frame Crossmember.

2. Remove castle nut (Figure 1, Item 1) and flat washer (Figure 1, Item 4) from towing pintle hook pivot bolt (Figure 1, Item 3).
3. Remove pintle hook assembly (Figure 2, Item 4) from pintle hook bracket (Figure 2, Item 3).

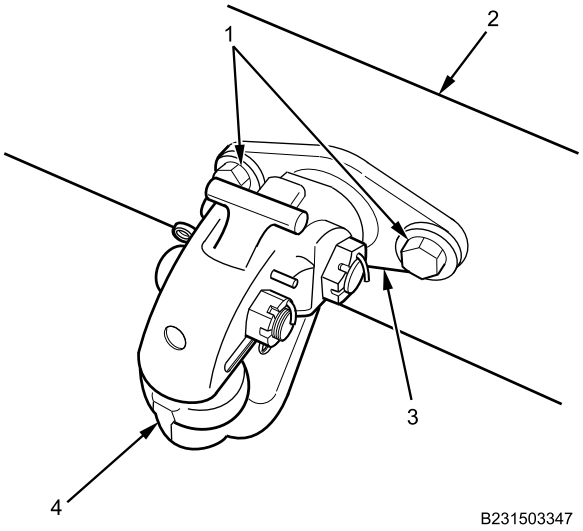

Figure 2. Towing Pintle Hook Assembly on Rear Frame Crossmember.

4. Remove two bolts (Figure 2, Item 1) and locknuts from towing pintle hook brackets (Figure 2, Item 3). Discard locknuts. Backside bracket not shown.
5. Remove towing pintle hook brackets (Figure 2, Item 3) from rear frame crossmember (Figure 2, Item 2).

END OF TASK

TOWING PINTLE HOOK REMOVAL AND INSTALLATION - (CONTINUED)

DISASSEMBLY

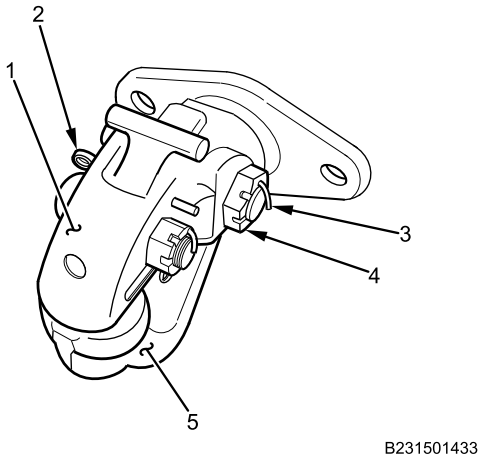

Figure 3. Towing Pintle Hook Assembly.

1. Pull cotter pin (Figure 3, Item 2) out of towing pintle hook upper jaw assembly (Figure 3, Item 1).
2. Remove cotter pin (Figure 3, Item 3) from upper jaw pivot bolt and castle nut (Figure 3, Item 4). Discard cotter pin.
3. Remove upper jaw pivot bolt and castle nut (Figure 3, Item 4) from towing pintle hook assembly (Figure 3, Item 5).
4. Remove upper jaw assembly (Figure 3, Item 1) from lower jaw of towing pintle hook assembly (Figure 3, Item 5).

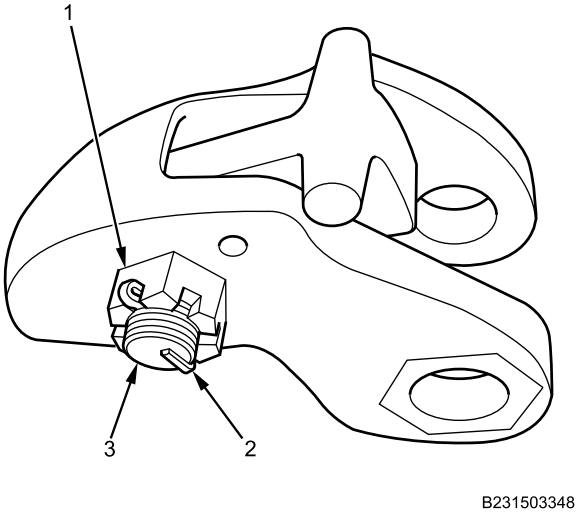

Figure 4. Towing Pintle Hook Upper Jaw Assembly.

5. Remove cotter pin (Figure 4, Item 2) from release handle retaining bolt (Figure 4, Item 3). Discard cotter pin .
6. Remove castle nut (Figure 4, Item 1) from release handle retaining bolt (Figure 4, Item 3).

TOWING PINTLE HOOK REMOVAL AND INSTALLATION - (CONTINUED)

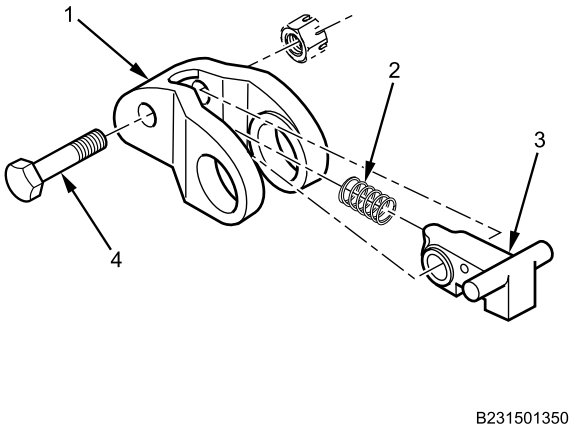

Figure 5. Upper Jaw Release Handle Return Spring Location.

7. Remove release handle retaining bolt (Figure 5, Item 4), release handle (Figure 5, Item 3), and release handle return spring (Figure 5, Item 2) from upper jaw (Figure 5, Item 1).

END OF TASK

ASSEMBLY

NOTE

Ensure return spring is inserted in depression in upper jaw and engaged with protrusion on release handle.

1. Position release handle (Figure 6, Item 4) and return spring (Figure 6, Item 3) in upper jaw (Figure 6, Item 1).

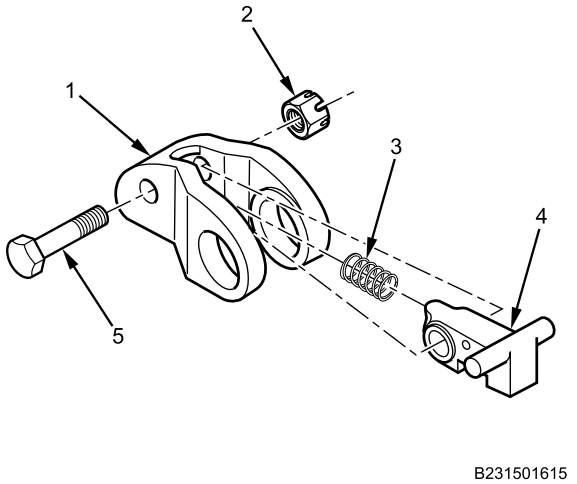

Figure 6. Upper Jaw Release Handle Return Spring Alignment.

2. Install castle nut (Figure 6, Item 2) and bolt (Figure 6, Item 5). Do not tighten.

TOWING PINTLE HOOK REMOVAL AND INSTALLATION - (CONTINUED)

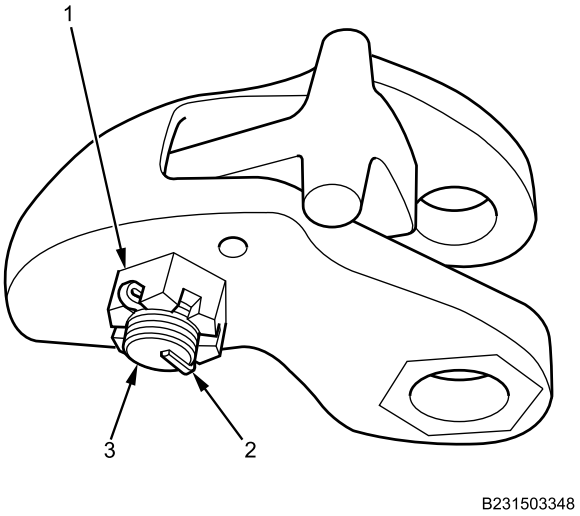

Figure 7. Towing Pintle Hook Upper Jaw Assembly.

3. Tighten castle nut (Figure 7, Item 1) just until cotter pin hole is aligned.
4. Install new cotter pin (Figure 7, Item 2) on release handle retaining bolt (Figure 7, Item 3) and bend tip over securely.

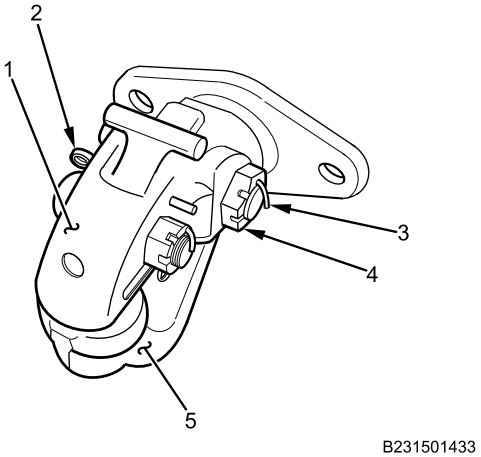

Figure 8. Towing Pintle Hook Assembly.

5. Install upper jaw assembly (Figure 8, Item 1) on lower jaw of towing pintle hook (Figure 8, Item 5).
6. Install upper jaw pivot bolt and castle nut (Figure 8, Item 4) finger tight.

NOTE

Upper jaw should pivot easily when the release handle is in the released position. If necessary, loosen castle nut just until cotter pin hole is aligned.

7. Tighten castle nut (Figure 8, Item 4) just until cotter pin hole is aligned.

TOWING PINTLE HOOK REMOVAL AND INSTALLATION - (CONTINUED)

8. Install new cotter pin (Figure 8, Item 3) on upper jaw pivot bolt and castle nut (Figure 8, Item 4) and bend tip over securely.

END OF TASK

INSTALLATION

WARNING

Towing pintle hook is heavy. Ensure pintle hook does not fall when fasteners are not installed. Failure to comply may result in damage to equipment and serious injury to personnel.

1. Install towing pintle hook brackets (Figure 9, Item 3) on rear frame crossmember (Figure 9, Item 2) with two bolts (Figure 9, Item 1) and new locknuts and tighten securely. Backside bracket not shown.

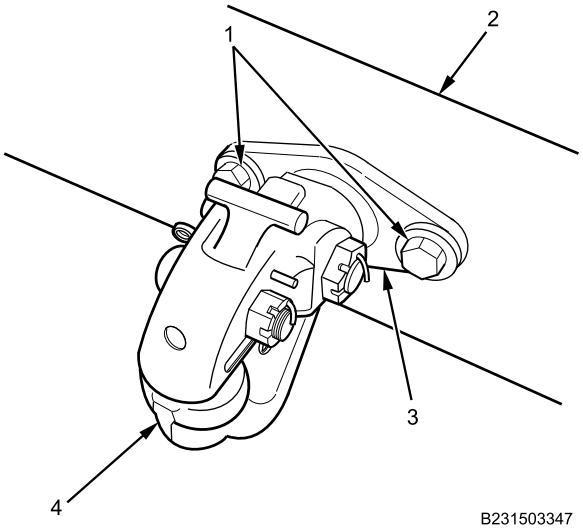

Figure 9. Towing Pintle Hook Assembly on Rear Frame Crossmember.

2. Position pintle hook assembly (Figure 9, Item 4) on pintle hook brackets (Figure 9, Item 3).

TOWING PINTLE HOOK REMOVAL AND INSTALLATION - (CONTINUED)

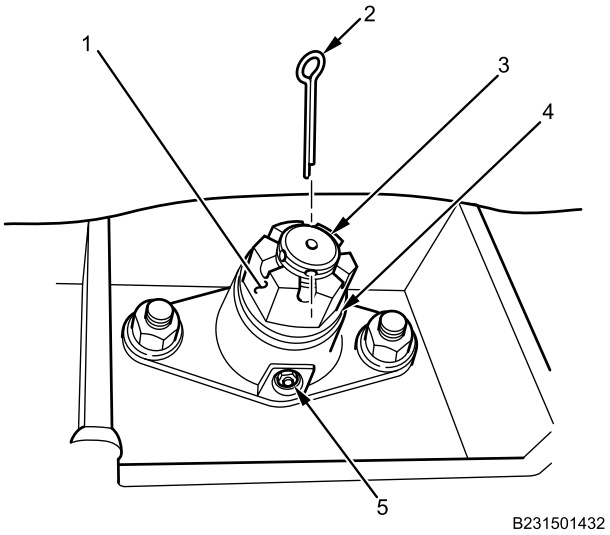

Figure 10. Towing Pintle Hook Assembly from Backside of Rear Frame Crossmember.

3. Install flat washer (Figure 10, Item 4) and castle nut (Figure 10, Item 1) on towing pintle hook pivot bolt (Figure 10, Item 3). Do not tighten.

NOTE

Towing pintle hook should spin easily. If necessary, loosen castle nut just until cotter pin hole is aligned.

4. Tighten castle nut (Figure 10, Item 1) just until cotter pin hole is aligned.
5. Install new cotter pin (Figure 10, Item 2) on towing pintle hook pivot bolt (Figure 10, Item 3) and bend tip over securely.
6. Apply grease to towing pintle hook pivot bolt lubrication fitting (Figure 10, Item 5) until grease is pushed out sides of pivot bolt.

TOWING PINTLE HOOK REMOVAL AND INSTALLATION - (CONTINUED)

7. Install cotter pin (Figure 11, Item 1) in order to secure release handle (Figure 11, Item 2) in locked position.

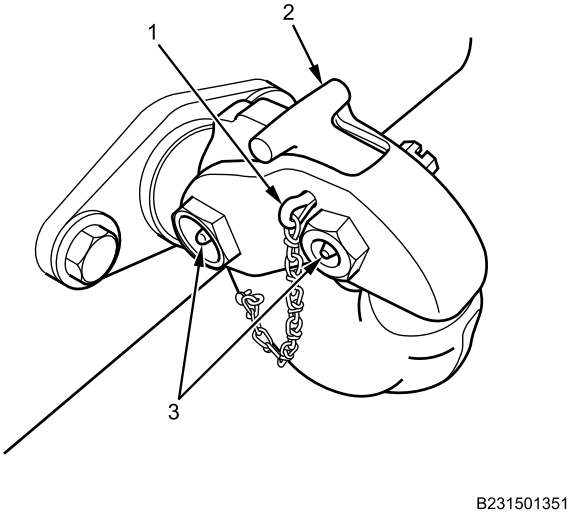

Figure 11. Left Side View of Towing Pintle Hook.

8. Apply grease to two lubrication fittings (Figure 11, Item 3) until grease is pushed out sides of bolts.

END OF TASK

FOLLOW-ON MAINTENANCE

1. Install muffler (WP 0276).
2. Remove wheel chocks (TM 9-2355-106-10).

END OF TASK

END OF WORK PACKAGE

FIELD MAINTENANCE

FRONT TOWING EYE REMOVAL AND INSTALLATION

INITIAL SETUP:

Tools and Special Tools
General Mechanic's Tool Kit (GMTK) (WP 0795, Item 37)
Wrench, torque, 90-600 lb-ft 3/4-inch drive (WP 0795, Item 144)
Adapter, socket, wrench drive, 3/4-inch female - 1/2-inch male (WP 0795, Item 4)

References
TM 9-2355-106-10
TM 9-2355-106-23P
WP 0782

Equipment Condition
Parking brake set (TM 9-2355-106-10)
Transmission set in NEUTRAL (N) (TM 9-2355-106-10)
Engine off (TM 9-2355-106-10)
MAIN POWER switch off (TM 9-2355-106-10)
Wheels chocked (TM 9-2355-106-10)
Blackout drive light assembly removed (WP 0366)

NOTE

Right side shown; left side similar.

REMOVAL

1. Remove nine bolts (Figure 1, Item 1) and nuts that attach towing eye (Figure 1, Item 2) to frame rail (Figure 1, Item 3).

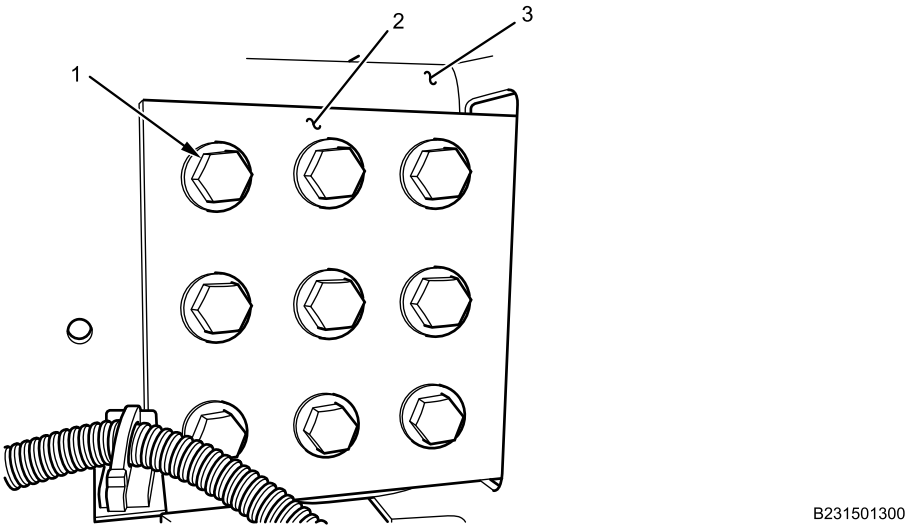

Figure 1. Side View of Right Front Towing Eye Behind Bumper.

FRONT TOWING EYE REMOVAL AND INSTALLATION - (CONTINUED)

WARNING

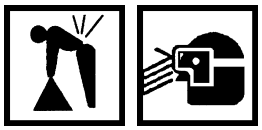

Towing eyes are heavy. Ensure towing eyes do not fall when removing fasteners. Failure to comply may result in damage to equipment and serious injury to personnel.

2. Remove bolt and nut (Figure 2, Item 1) that attach towing eye brace (Figure 2, Item 2) to towing eye (Figure 2, Item 3).
3. Remove towing eye (Figure 2, Item 3) through front bumper (Figure 2, Item 4).

END OF TASK

INSTALLATION

1. Install towing eye (Figure 2, Item 3) through front bumper (Figure 2, Item 4) and loosely install bolt and nut (Figure 2, Item 1) that attach towing eye brace (Figure 2, Item 2) to towing eye.

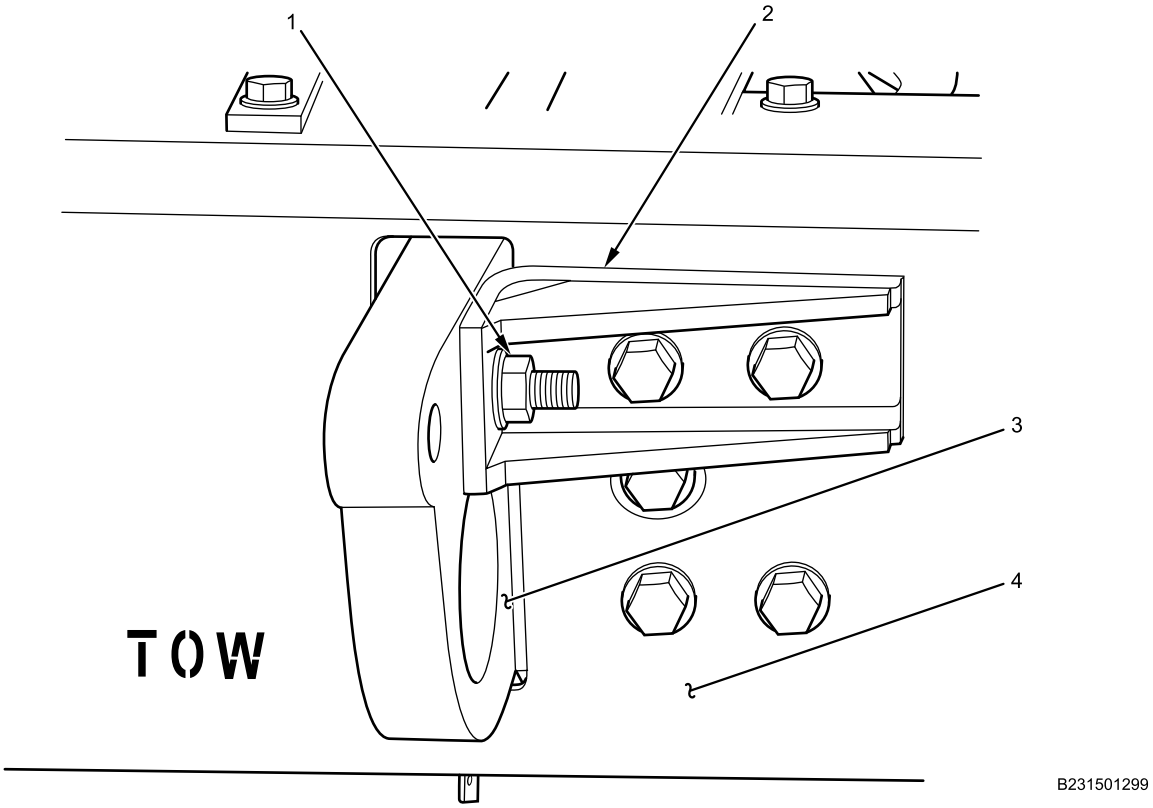

Figure 2. Front View of Right Front Towing Eye.

FRONT TOWING EYE REMOVAL AND INSTALLATION - (CONTINUED)

2. Install nine bolts (Figure 3, Item 1) and nuts that attach towing eye (Figure 3, Item 2) to frame rail (Figure 3, Item 3) and torque to 350-375 lb-ft (475-508 N•m).

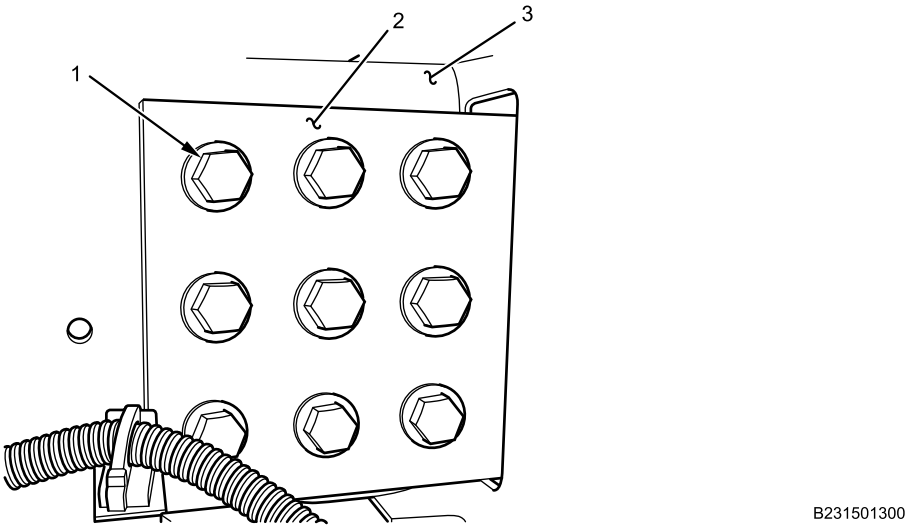

Figure 3. Side View of Right Front Towing Eye Behind Bumper.

END OF TASK

FOLLOW-ON MAINTENANCE

1. Install blackout light assembly (WP 0366).
2. Remove wheel chocks (TM 9-2355-106-10).

END OF TASK

END OF WORK PACKAGE

FIELD MAINTENANCE

FRONT AXLE BUMPER STOP REMOVAL AND INSTALLATION

INITIAL SETUP:

Tools and Special Tools
General Mechanic's Tool Kit (GMTK) (WP 0795, Item 37)

Materials/Parts
Gloves (WP 0794, Item 18)
Goggles, industrial (WP 0794, Item 20)
Faceshield, industrial (WP 0794, Item 16)
Compound (WP 0794, Item 13)
Locknut (WP 0796, Item 30)

References
TM 9-2355-106-10
TM 9-2355-106-23P
WP 0786
WP 0782

Equipment Condition
Parking brake set (TM 9-2355-106-10)
Transmission set in NEUTRAL (N) (TM 9-2355-106-10)
Engine off (TM 9-2355-106-10)
MAIN POWER switch off (TM 9-2355-106-10)
Wheels chocked (TM 9-2355-106-10)

REMOVAL

1. Remove locknut (Figure 1, Item 3) from front axle bumper stop stud (Figure 1, Item 2). Discard locknut.

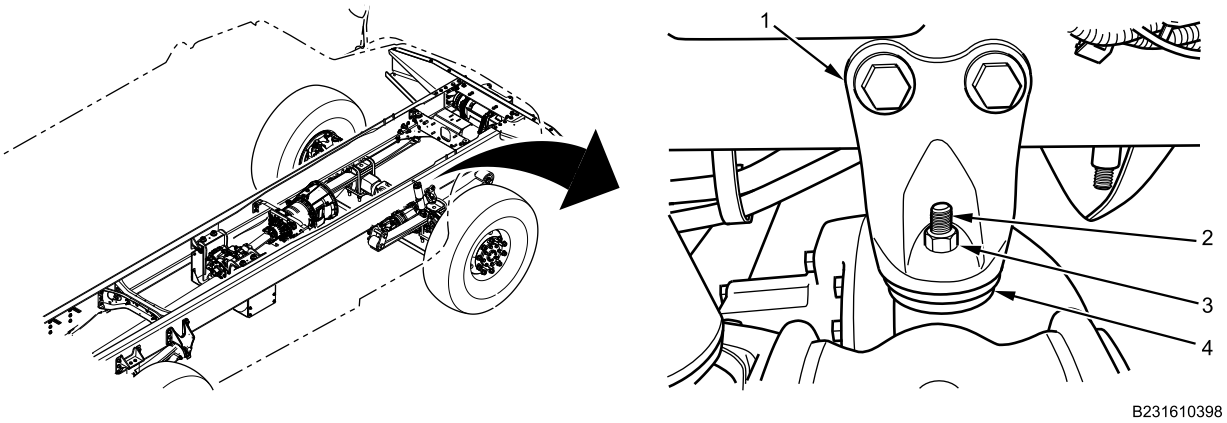

Figure 1. Front Axle Bumper Stop Removal.

2. Remove front axle bumper stop (Figure 1, Item 4) from bumper stop bracket (Figure 1, Item 1).

END OF TASK

FRONT AXLE BUMPER STOP REMOVAL AND INSTALLATION - (CONTINUED)

INSTALLATION

WARNING

Corrosion preventive compound is toxic. Use only in well-ventilated area. Do not get in eyes; wear chemical safety goggles and full-face shield when using. Avoid contact with skin and wear rubber or plastic, solvent-resistant gloves. In case of contact, remove contaminated clothing and immediately wash area with soap and water. If compound contacts eyes, flush eyes with large amounts of water for at least 15 minutes and get immediate medical attention. If swallowed, do not induce vomiting; contact a physician immediately. Failure to comply may result in serious injury or death to personnel.

1. Apply corrosion preventive compound to front axle bumper stop stud (Figure 2, Item 2) and new locknut (Figure 2, Item 3).

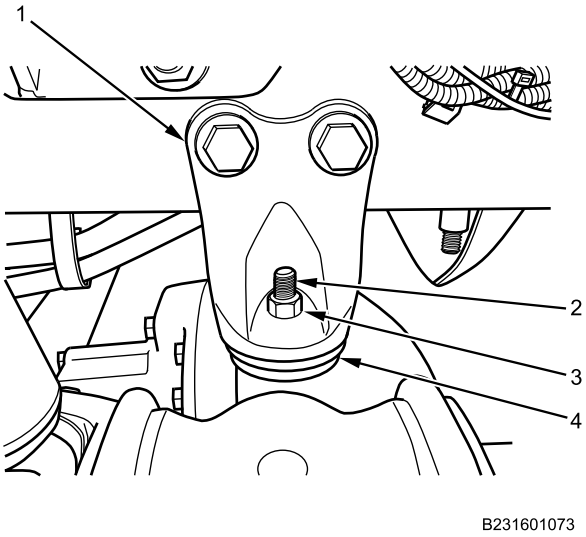

Figure 2. Front Axle Bumper Stop Installation.

2. Position front axle bumper stop (Figure 2, Item 4) on bumper stop bracket (Figure 2, Item 1). Install front bumper stop locknut (Figure 2, Item 3) on bumper stop stud (Figure 2, Item 2).
3. Tighten front bumper stop locknut (Figure 2, Item 3).

END OF TASK

FRONT AXLE BUMPER STOP REMOVAL AND INSTALLATION - (CONTINUED)

FOLLOW-ON MAINTENANCE

1. Remove wheel chocks (TM 9-2355-106-10).
2. Turn MAIN POWER switch on (TM 9-2355-106-10).
3. Test-drive vehicle to verify front axle bumper stop operation.
4. Set transmission in NEUTRAL (N) (TM 9-2355-106-10).
5. Set vehicle parking brake (TM 9-2355-106-10).
6. Turn engine off (TM 9-2355-106-10).
7. Turn MAIN POWER switch off (TM 9-2355-106-10).

END OF TASK

END OF WORK PACKAGE

FIELD MAINTENANCE

FRONT AXLE BUMPER STOP BRACKET REMOVAL AND INSTALLATION

INITIAL SETUP:

Tools and Special Tools
General Mechanic's Tool Kit (GMTK) (WP 0795, Item 37)
Wrench, torque, 90-600 lb-ft, 3/4-inch drive (WP 0795, Item 144)

Materials/Parts
Compound (WP 0794, Item 13)
Locknut - (2) (WP 0796, Item 30)
Gloves (WP 0794, Item 18)
Faceshield, industrial (WP 0794, Item 16)
Goggles, industrial (WP 0794, Item 20)

Personnel Required
Maintainer - (2)

References
TM 9-2355-106-10
TM 9-2355-106-23P
WP 0782

Equipment Condition
Parking brake set (TM 9-2355-106-10)
Transmission set in NEUTRAL (N) (TM 9-2355-106-10)
Engine off (TM 9-2355-106-10)
MAIN POWER switch off (TM 9-2355-106-10)
Wheels chocked (TM 9-2355-106-10)
Front axle bumper stop removed (WP 0554)

REMOVAL

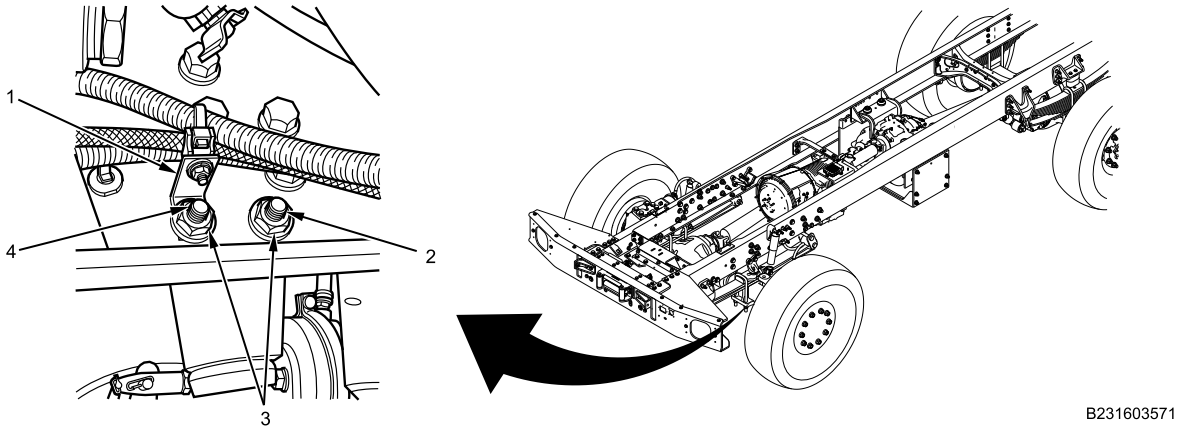

Figure 1. Front Axle Bumper Stop Bracket Locknut and Harness Clip Extension Removal.

1. Remove two locknuts (Figure 1, Item 3) from two bolts (Figure 1, Item 2 and 4). Discard locknuts.
2. Remove harness clip extension (Figure 1, Item 1) from bolt (Figure 1, Item 4).

FRONT AXLE BUMPER STOP BRACKET REMOVAL AND INSTALLATION - (CONTINUED)

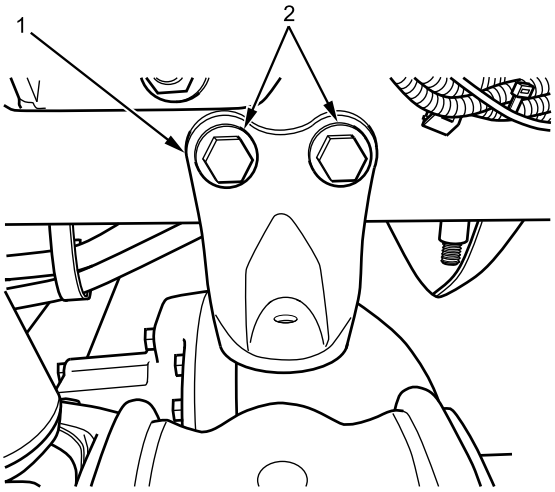

B231601074

Figure 2. Front Bumper Stop Bracket Removal.

3. Remove two bolts (Figure 2, Item 2) and front bumper stop bracket (Figure 2, Item 1).

END OF TASK

INSTALLATION

WARNING

Corrosion preventive compound is toxic. Use only in well-ventilated area. Do not get in eyes; wear chemical safety goggles and full-face shield when using. Avoid contact with skin and wear rubber or plastic, solvent-resistant gloves. In case of contact, remove contaminated clothing and immediately wash area with soap and water. If compound contacts eyes, flush eyes with large amounts of water for at least 15 minutes and get immediate medical attention. If swallowed, do not induce vomiting; contact a physician immediately. Failure to comply may result in serious injury or death to personnel.

1. Apply corrosion preventive compound to two bolts (Figure 3, Item 2).

FRONT AXLE BUMPER STOP BRACKET REMOVAL AND INSTALLATION - (CONTINUED)

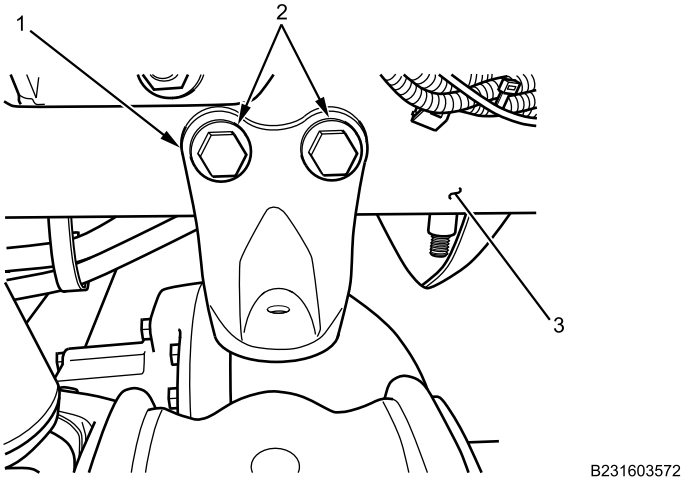

Figure 3. Front Bumper Stop Bracket Installation.

2. Position front bumper stop bracket (Figure 3, Item 1) on frame rail (Figure 3, Item 3). Install two bolts (Figure 3, Item 2).
3. Apply corrosion preventive compound to two new locknuts (Figure 4, Item 3) and harness clip extension (Figure 4, Item 1).

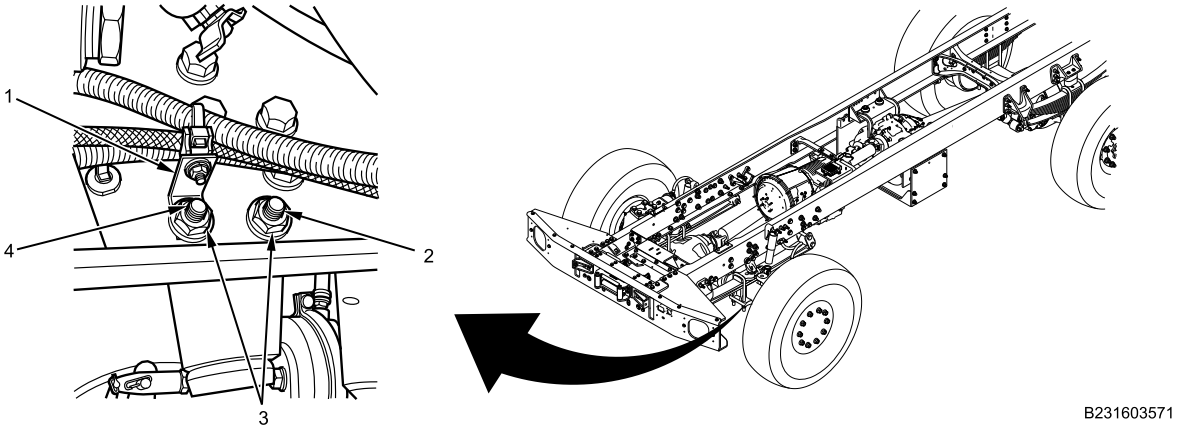

Figure 4. Front Axle Bumper Stop Bracket Locknut and Harness Clip Extension Installation.

4. Install harness clip extension (Figure 4, Item 1) with bolt (Figure 4, Item 4).
5. Install two locknuts (Figure 4, Item 3) on two bolts (Figure 4, Item 2 and 4).
6. Torque front bumper stop bracket locknuts (Figure 4, Item 3) to 200-240 lb-ft (271-325 N•m).

END OF TASK

FRONT AXLE BUMPER STOP BRACKET REMOVAL AND INSTALLATION - (CONTINUED)

FOLLOW-ON MAINTENANCE

1. Install front axle bumper stop (WP 0554).
2. Turn MAIN POWER switch on (TM 9-2355-106-10).
3. Remove wheel chocks (TM 9-2355-106-10).
4. Test-drive vehicle to verify front bounce stop operation (TM 9-2355-106-10).
5. Set transmission in NEUTRAL (N) (TM 9-2355-106-10).
6. Set vehicle parking brake (TM 9-2355-106-10).
7. Turn engine off (TM 9-2355-106-10).
8. Turn MAIN POWER switch off (TM 9-2355-106-10).

END OF TASK

END OF WORK PACKAGE

FIELD MAINTENANCE

AUXILIARY SPRING REMOVAL AND INSTALLATION

INITIAL SETUP:

Tools and Special Tools
General Mechanic's Tool Kit (GMTK) (WP 0795, Item 37)
Wrench, torque, 50-250 lb-ft, 1/2-inch drive (WP 0795, Item 143)
Jack, floor, 20-ton (WP 0795, Item 59)
Jackstand, 10-ton, 30–52-inches, (2) (WP 0795, Item 24)

Materials/Parts
Compound (WP 0794, Item 13)
Gloves (WP 0794, Item 18)
Faceshield, industrial (WP 0794, Item 16)
Goggles, industrial (WP 0794, Item 20)

Personnel Required
Maintainer - (2)

References
TM 9-2355-106-10
TM 9-2355-106-23P
WP 0782

Equipment Condition
Parking brake set (TM 9-2355-106-10)
Transmission set in NEUTRAL (N) (TM 9-2355-106-10)
Engine off (TM 9-2355-106-10)
MAIN POWER switch off (TM 9-2355-106-10)
Wheels chocked (TM 9-2355-106-10)

REMOVAL

WARNING

Before lifting vehicle off ground, make sure it is parked on level surface. Set parking brake and chock wheels. Use hydraulic jack to lift vehicle. Jackstands and hydraulic jack must be used on a stable surface capable of supporting the combined weight of the vehicle being lifted and the lifting equipment. Do not use jack alone to support vehicle. Never work under or near a vehicle supported only by jack or lifting device. Use rated jackstands under frame rails to properly support vehicle. Do not support vehicle under front and rear axles. Use additional jackstands as necessary to support vehicle components during removal and installation procedures. Failure to comply may result in damage to equipment and serious injury or death to personnel.

AUXILIARY SPRING REMOVAL AND INSTALLATION - (CONTINUED)

1. With assistant, raise vehicle with hydraulic jack and install jackstands on right and left frame rails. Sufficient clearance is necessary between auxiliary spring (Figure 1, Item 3) and U-bolt spring seat (Figure 1, Item 4) for tool access on auxiliary spring nuts.

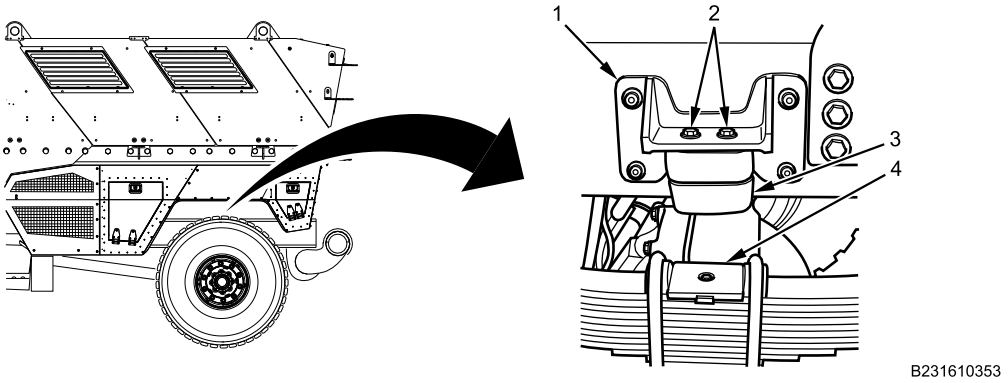

Figure 1. Auxiliary Spring.

NOTE

Access to auxiliary spring nuts is through cavities in base of auxiliary spring.

2. Remove auxiliary spring bolts (Figure 1, Item 2), nuts, and auxiliary rubber spring (Figure 1, Item 3) from auxiliary spring bracket (Figure 1, Item 1).

END OF TASK

INSTALLATION

WARNING

Corrosion preventive compound is toxic. Use only in well-ventilated area. Do not get in eyes; wear chemical safety goggles and full-face shield when using. Avoid contact with skin and wear rubber or plastic, solvent-resistant gloves. In case of contact, remove contaminated clothing and immediately wash area with soap and water. If compound contacts eyes, flush eyes with large amounts of water for at least 15 minutes and get immediate medical attention. If swallowed, do not induce vomiting; contact a physician immediately. Failure to comply may result in serious injury or death to personnel.

1. Apply corrosion preventive compound to auxiliary spring bolts (Figure 2, Item 2) and nuts.

AUXILIARY SPRING REMOVAL AND INSTALLATION - (CONTINUED)

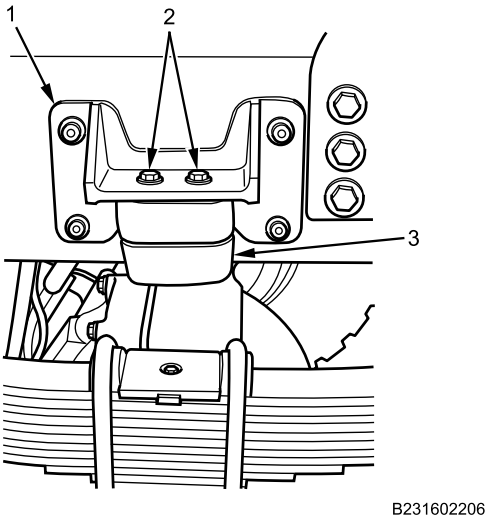

Figure 2. Auxiliary Spring.

2. Install auxiliary spring bolts (Figure 2, Item 2), nuts, and auxiliary rubber spring (Figure 2, Item 3) on auxiliary spring bracket (Figure 2, Item 1). Torque nuts to 60-75 lb-ft (81-102 N•m).
3. With assistance, raise rear of vehicle with hydraulic jack, remove jackstands from right and left frame rails, and lower rear of vehicle.

END OF TASK

FOLLOW-ON MAINTENANCE

1. Remove wheel chocks (TM 9-2355-106-10).
2. Turn MAIN POWER switch on (TM 9-2355-106-10).
3. Test-drive vehicle to verify rear suspension operation.
4. Set transmission in NEUTRAL (N) (TM 9-2355-106-10).
5. Set parking brake (TM 9-2355-106-10).
6. Turn engine off (TM 9-2355-106-10).
7. Turn MAIN POWER switch off (TM 9-2355-106-10).

END OF TASK

END OF WORK PACKAGE

FIELD MAINTENANCE

REAR SPRING ASSEMBLY REMOVAL AND INSTALLATION

INITIAL SETUP:

Tools and Special Tools
General Mechanic's Tool Kit (GMTK) (WP 0795, Item 37)
Wrench, torque, 90-600 lb-ft, 3/4-inch drive (WP 0795, Item 144)
Jack, floor, 20-ton (WP 0795, Item 59)
Jackstand, 10-ton, 30–52-inches, (2) (WP 0795, Item 24)

Materials/Parts
Gloves (WP 0794, Item 18)
Faceshield, industrial (WP 0794, Item 16)
Goggles, industrial (WP 0794, Item 20)
Compound (WP 0794, Item 13)
Locknut - (4) (WP 0796, Item 44)
Pin, cotter - (2) (WP 0796, Item 50)

Personnel Required
Maintainer - (2)

References
TM 9-2355-106-10
TM 9-2355-106-23P
WP 0782

Equipment Condition
Parking brake set (TM 9-2355-106-10)
Transmission set in NEUTRAL (N) (TM 9-2355-106-10)
Engine off (TM 9-2355-106-10)
MAIN POWER switch off (TM 9-2355-106-10)
Wheels chocked (TM 9-2355-106-10)
Brake S-camshaft tube support bracket removed (WP 0498)

REMOVAL

1. Remove cotter pin (Figure 1, Item 2) from rear spring rear bracket rebound pin (Figure 1, Item 3) and rear spring rear bracket (Figure 1, Item 1). Discard cotter pin (Figure 1, Item 2).

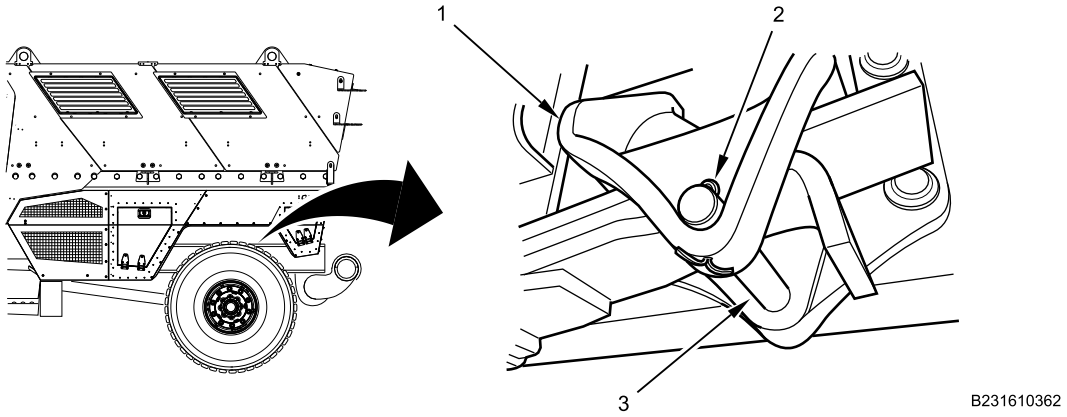

Figure 1. Rear Spring Rear Bracket Rebound Pin.

2. Remove rear spring rear bracket rebound pin (Figure 1, Item 3) from rear spring rear bracket (Figure 1, Item 1).

REAR SPRING ASSEMBLY REMOVAL AND INSTALLATION - (CONTINUED)

3. Remove cotter pin (Figure 2, Item 3) from rear spring front bracket rebound pin (Figure 2, Item 2) and rear spring front bracket (Figure 2, Item 1). Discard cotter pin (Figure 2, Item 3).

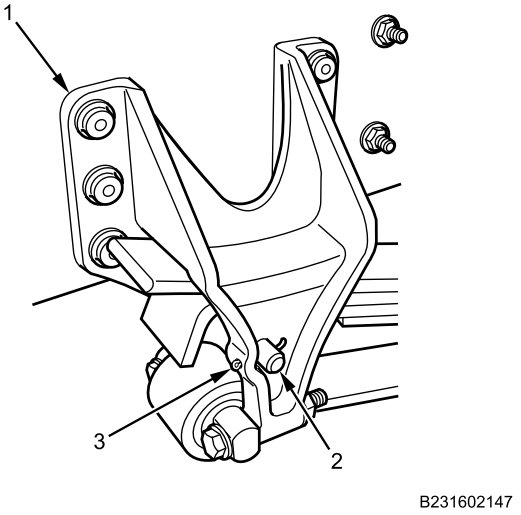

Figure 2. Rear Spring Front Bracket Rebound Pin.

4. Remove rear spring front bracket rebound pin (Figure 2, Item 2) from rear spring front bracket (Figure 2, Item 1).
5. Remove nuts (Figure 3, Item 2 and 3) from rear spring pivot link bolts (Figure 3, Item 1).

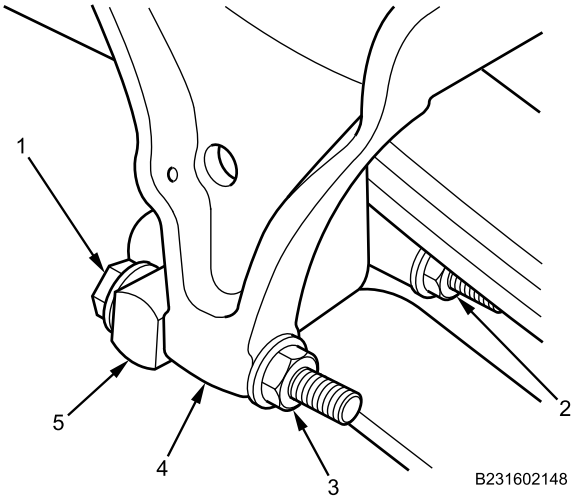

Figure 3. Rear Spring Pivot Link.

NOTE

Identify and mark for orientation any shims between rear spring pivot link bushing pin and rear spring front bracket.

6. Remove two rear spring pivot link bolts (Figure 3, Item 1) from rear spring front bracket (Figure 3, Item 4) and rear spring pivot link bushing pin (Figure 3, Item 5).

REAR SPRING ASSEMBLY REMOVAL AND INSTALLATION - (CONTINUED)

WARNING

Before lifting vehicle off ground, make sure it is parked on level surface. Set parking brake and chock wheels. Use hydraulic jack to lift vehicle. Jackstands and hydraulic jack must be used on a stable surface capable of supporting the combined weight of the vehicle being lifted and the lifting equipment. Do not use jack alone to support vehicle. Never work under or near a vehicle supported only by jack or lifting device. Use rated jackstands under frame rails to properly support vehicle. Do not support vehicle under front and rear axles. Use additional jackstands as necessary to support vehicle components during removal and installation procedures. Failure to comply may result in damage to equipment and serious injury or death to personnel.

7. With assistance, raise vehicle with hydraulic jack and install jackstands on right and left frame rails. Ensure clearance between bracket and rear spring for spring removal.
8. Remove U-bolt locknuts and washers (Figure 4, Item 2) from rear spring front U-bolt (Figure 4, Item 1). Discard locknuts (Figure 4, Item 2).

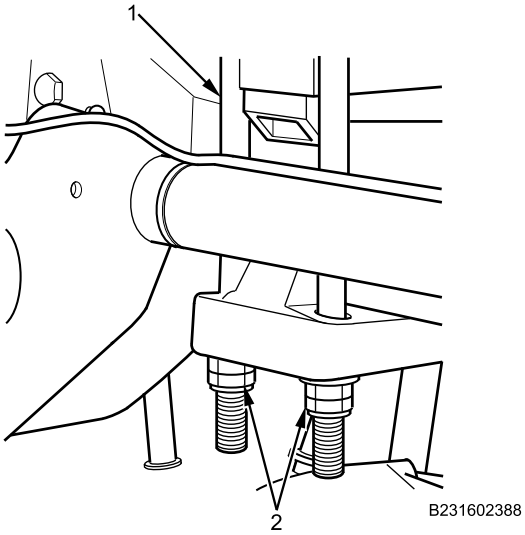

Figure 4. Front U-Bolt.

REAR SPRING ASSEMBLY REMOVAL AND INSTALLATION - (CONTINUED)

9. Remove U-bolt locknuts and washers (Figure 5, Item 2) from rear spring rear U-bolt (Figure 5, Item 1). Discard locknuts (Figure 5, Item 2).

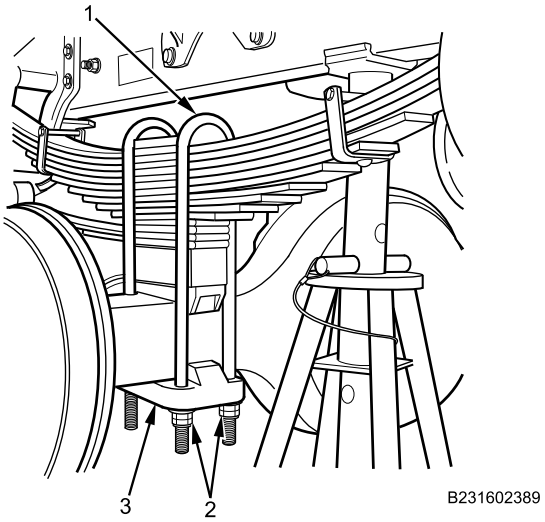

Figure 5. Rear U-Bolt.

10. Remove U-bolt rear spring plate (Figure 5, Item 3) from rear spring U-bolts.
11. Remove U-bolts (Figure 6, Item 1) and U-bolt rear spring seat (Figure 6, Item 2) from rear spring (Figure 6, Item 3).

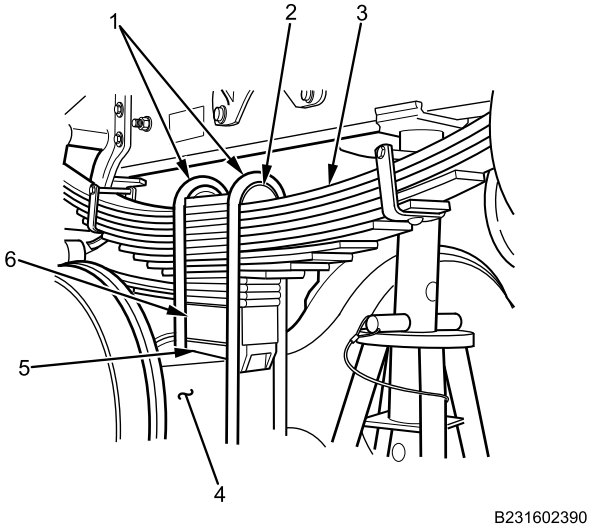

Figure 6. Rear Spring.

12. With assistance, remove rear spring (Figure 6, Item 3) from rear spring spacer (Figure 6, Item 6) and remove spring from vehicle.
13. Remove rear spring spacer (Figure 6, Item 6) and rear spring seat (Figure 6, Item 5) from rear axle (Figure 6, Item 4).

END OF TASK

REAR SPRING ASSEMBLY REMOVAL AND INSTALLATION - (CONTINUED)

INSTALLATION

WARNING

Corrosion preventive compound is toxic. Use only in well-ventilated area. Do not get in eyes; wear chemical safety goggles and full-face shield when using. Avoid contact with skin and wear rubber or plastic, solvent-resistant gloves. In case of contact, remove contaminated clothing and immediately wash area with soap and water. If compound contacts eyes, flush eyes with large amounts of water for at least 15 minutes and get immediate medical attention. If swallowed, do not induce vomiting; contact a physician immediately. Failure to comply may result in serious injury or death to personnel.

1. Apply corrosion preventive compound to rear spring front bracket rebound pin (Figure 7, Item 2) and new cotter pin (Figure 7, Item 3).

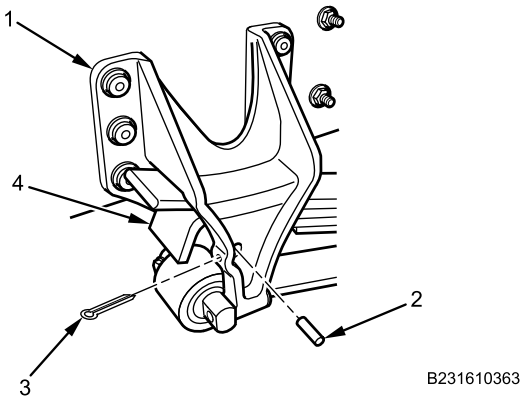

Figure 7. Rear Leaf Spring Front Bracket Rebound Pin.

2. With assistant, lift rear spring (Figure 7, Item 4) into rear spring front bracket (Figure 7, Item 1).
3. Install rear spring front bracket rebound pin (Figure 7, Item 2) on rear spring front bracket (Figure 7, Item 1).
4. Install cotter pin (Figure 7, Item 3) on rear spring front bracket (Figure 7, Item 1) and rebound pin (Figure 7, Item 2).

REAR SPRING ASSEMBLY REMOVAL AND INSTALLATION - (CONTINUED)

5. With assistance lift rear of rear spring while installing rear spring seat (Figure 8, Item 5) rear spring spacer (Figure 8, Item 6) and dowel pin on rear axle (Figure 8, Item 4).

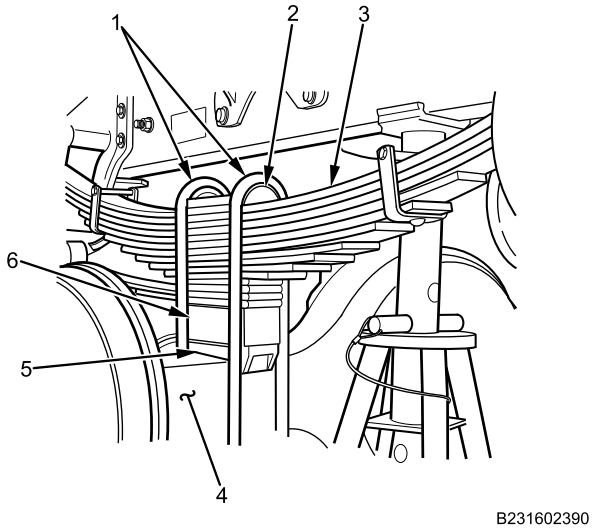

Figure 8. Rear Spring.

6. Lower spring (Figure 8, Item 3) onto rear spring spacer (Figure 8, Item 6) and remove front bracket rebound pin cotter pin (Figure 9, Item 3) and front bracket rebound pin (Figure 9, Item 2) from front spring bracket (Figure 9, Item 1).

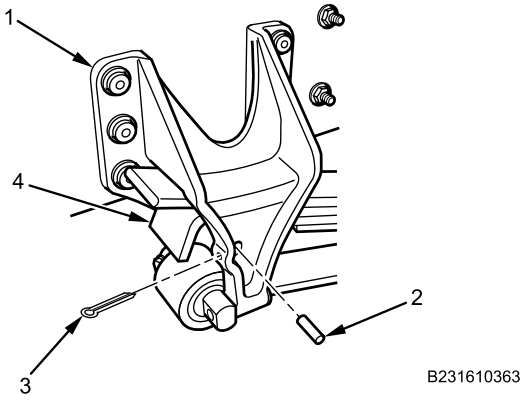

Figure 9. Rear Leaf Spring Front Bracket Rebound Pin.

7. Install U-bolt rear spring seat (Figure 8, Item 2) and U-bolts (Figure 8, Item 1) on rear spring (Figure 8, Item 3).
8. Install U-bolt rear spring plate (Figure 10, Item 3) on rear U-bolt (Figure 10, Item 1).

REAR SPRING ASSEMBLY REMOVAL AND INSTALLATION - (CONTINUED)

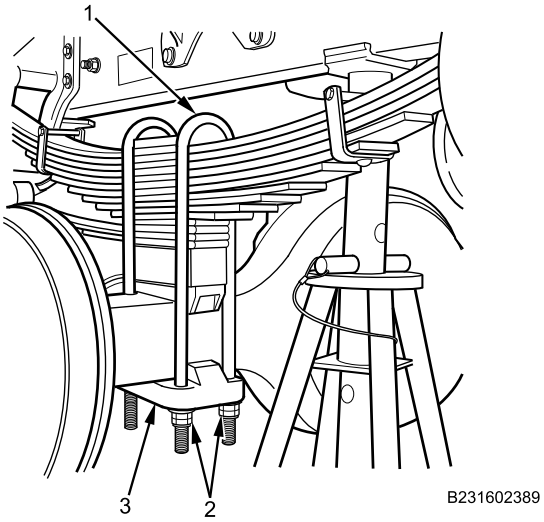

Figure 10. Rear U-Bolt.

9. Apply corrosion preventive compound to new U-bolt locknuts and washers (Figure 10, Item 2).
10. Loosely install U-bolt washers and locknuts (Figure 10, Item 2) on rear spring rear U-bolt (Figure 10, Item 1).
11. Apply corrosion preventive compound to new U-bolt locknuts and washers (Figure 11, Item 2).

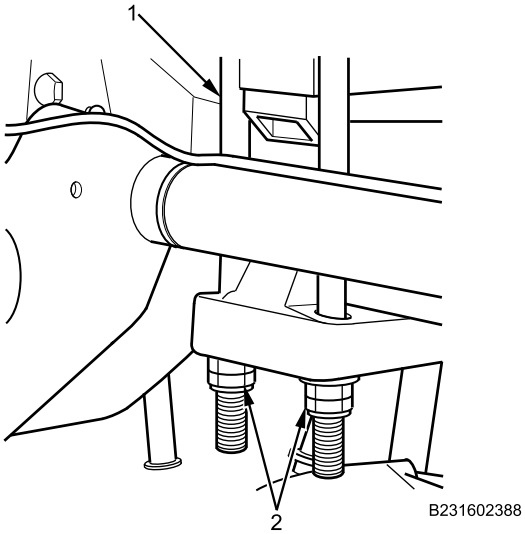

Figure 11. Front U-Bolt.

12. Loosely install washers and U-bolt locknuts (Figure 11, Item 2) on rear spring front U-bolt (Figure 11, Item 1).

REAR SPRING ASSEMBLY REMOVAL AND INSTALLATION - (CONTINUED)

13. Torque four U-bolt nuts in the diagonal sequence shown, in the following increments:
    a. Torque all to 15 lb-ft (20 N•m).
    b. Torque all to 100 lb-ft (135 N•m).
    c. Torque all to 200 lb-ft (270 N•m).
    d. Torque all to 300 lb-ft (407 N•m).
    e. Torque all to 370-400 lb-ft (502-542 N•m).

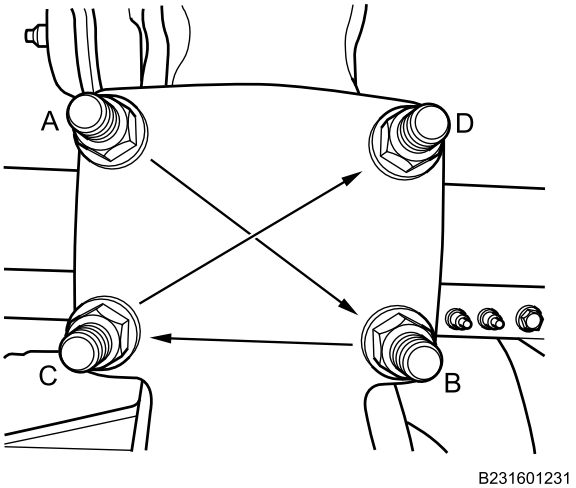

Figure 12. Rear Spring U-Bolt Tightening Sequence.

14. With assistance, raise rear of vehicle with hydraulic jack, remove jackstands from right and left frame rails, and lower rear of vehicle.
15. Apply corrosion preventive compound to rear spring pivot link bolts (Figure 13, Item 1) and nuts (Figure 13, Item 2 and 3).

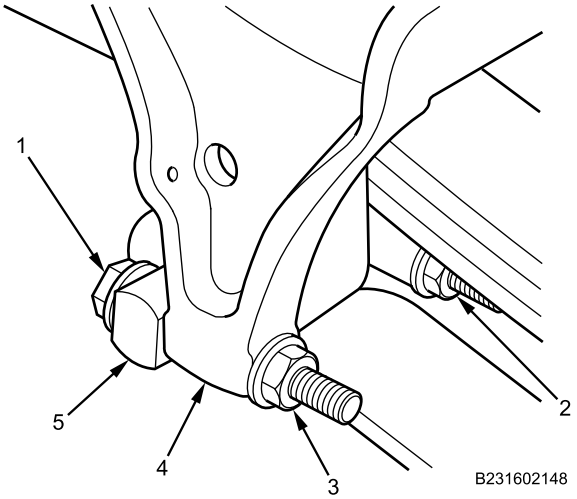

Figure 13. Rear Spring Pivot Link.

16. Install two rear spring pivot link bolts (Figure 13, Item 1) on rear spring pivot link bushing pin (Figure 13, Item 5) and rear spring front bracket (Figure 13, Item 4).
17. Install shims between rear spring pivot (Figure 13, Item 5) and rear spring front bracket (Figure 13, Item 4) link bushing pin noted during removal procedure.
18. Install nuts (Figure 13, Item 2 and 3) on rear spring pivot link bolts (Figure 13, Item 1) and torque nuts to 220 lb-ft (298 N•m).

REAR SPRING ASSEMBLY REMOVAL AND INSTALLATION - (CONTINUED)

19. Apply corrosion preventive compound to rear spring front bracket rebound pin (Figure 14, Item 2) and new cotter pin (Figure 14, Item 3).

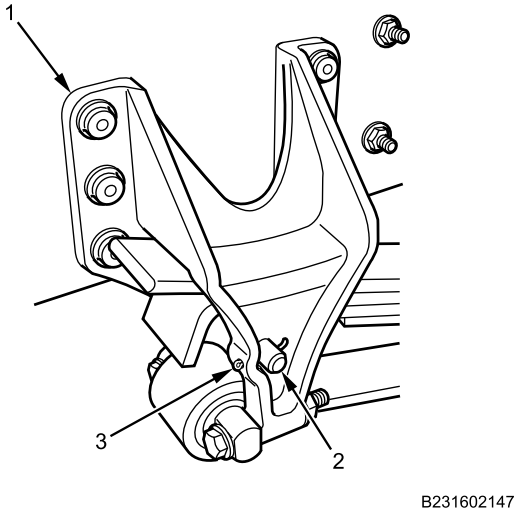

Figure 14. Rear Spring Front Bracket Rebound Pin.

20. Install rear spring front bracket rebound pin (Figure 14, Item 2) on rear spring front bracket (Figure 14, Item 1).
21. Install cotter pin (Figure 14, Item 3) on rear spring front bracket rebound pin (Figure 14, Item 2).
22. Apply corrosion preventive compound to rear spring rear bracket rebound pin (Figure 15, Item 3) and new cotter pin (Figure 15, Item 2).

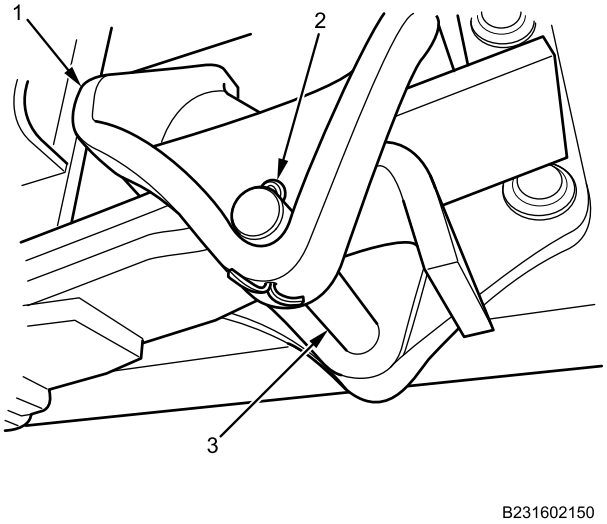

Figure 15. Rear Spring Rear Bracket Rebound Pin.

23. Install rear spring rear bracket rebound pin (Figure 15, Item 3) on rear spring rear bracket (Figure 15, Item 1).
24. Install cotter pin (Figure 15, Item 2) on rear spring rear bracket rebound pin (Figure 15, Item 3).

END OF TASK

REAR SPRING ASSEMBLY REMOVAL AND INSTALLATION - (CONTINUED)

FOLLOW-ON MAINTENANCE

1. Install brake S-camshaft tube support bracket (WP 0498).
2. Turn MAIN POWER switch on (TM 9-2355-106-10).
3. Remove wheel chocks (TM 9-2355-106-10).
4. Test-drive vehicle to verify rear suspension operation.
5. Set transmission in NEUTRAL (N) (TM 9-2355-106-10).
6. Set vehicle parking brake (TM 9-2355-106-10).
7. Turn engine off (TM 9-2355-106-10).
8. Turn MAIN POWER switch off (TM 9-2355-106-10).

END OF TASK

END OF WORK PACKAGE

FIELD MAINTENANCE

FRONT SPRING SHACKLE REMOVAL AND INSTALLATION

INITIAL SETUP:

Tools and Special Tools
General Mechanic's Tool Kit (GMTK) (WP 0795, Item 37)
Wrench, torque, 50-250 lb-ft, 1/2-inch drive (WP 0795, Item 143)
Jack, floor, 20-ton (WP 0795, Item 59)
Jackstand, 10-ton, 30–52-inches (2) (WP 0795, Item 63)

Materials/Parts
Compound (WP 0794, Item 13)
Gloves (WP 0794, Item 18)
Faceshield, industrial (WP 0794, Item 16)
Goggles, industrial (WP 0794, Item 20)
Locknut - (2) (WP 0796, Item 16)

References
TM 9-2355-106-10
TM 9-2355-106-23P
WP 0782

Equipment Condition
Parking brake set (TM 9-2355-106-10)
Transmission set in NEUTRAL (N) (TM 9-2355-106-10)
Engine off (TM 9-2355-106-10)
MAIN POWER switch off (TM 9-2355-106-10)
Rear wheels chocked, front and back (TM 9-2355-106-10)
Belly armor removed (WP 0606)

NOTE

Left and right front spring shackles are similar. Left side shown.

FRONT SPRING SHACKLE REMOVAL AND INSTALLATION - (CONTINUED)

REMOVAL

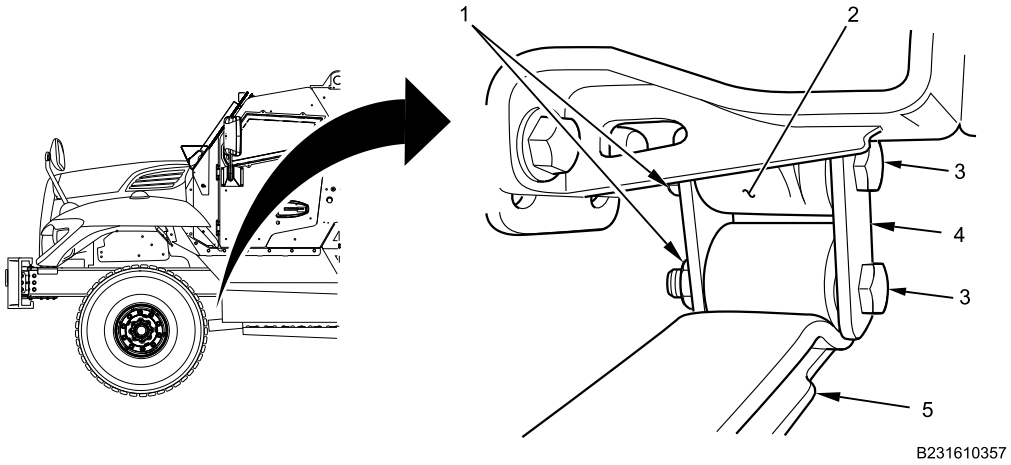

Figure 1. Front Spring Shackle.

1. Loosen front spring rear bracket shackle locknuts (Figure 1, Item 1) and bolts (Figure 1, Item 3).

WARNING

Before lifting vehicle off ground, make sure it is parked on level surface. Set parking brake and chock wheels. Use hydraulic jack to lift vehicle. Jackstands and hydraulic jack must be used on a stable surface capable of supporting the combined weight of the vehicle being lifted and the lifting equipment. Do not use jack alone to support vehicle. Never work under or near a vehicle supported only by jack or lifting device. Use rated jackstands under frame rails to properly support vehicle. Do not support vehicle under front and rear axles. Use additional jackstands as necessary to support vehicle components during removal and installation procedures. Failure to comply may result in damage to equipment and serious injury or death to personnel.

2. Raise front of vehicle with hydraulic jack to relieve spring tension on shackle bolts (Figure 1, Item 3). Install jackstands on right and left frame rails.
3. Remove two shackle locknuts (Figure 1, Item 1), shackle bolts (Figure 1, Item 3), and two shackle plates (Figure 1, Item 4) from front spring rear bracket (Figure 1, Item 2) and front spring (Figure 1, Item 5). Discard locknuts.

END OF TASK

FRONT SPRING SHACKLE REMOVAL AND INSTALLATION - (CONTINUED)

INSTALLATION

WARNING

Corrosion preventive compound is toxic. Use only in well-ventilated area. Do not get in eyes; wear chemical safety goggles and full-face shield when using. Avoid contact with skin and wear rubber or plastic, solvent-resistant gloves. In case of contact, remove contaminated clothing and immediately wash area with soap and water. If compound contacts eyes, flush eyes with large amounts of water for at least 15 minutes and get immediate medical attention. If swallowed, do not induce vomiting; contact a physician immediately. Failure to comply may result in serious injury or death to personnel.

1. Apply corrosion preventive compound to shackle bolts (Figure 2, Item 5) and new locknuts (Figure 2, Item 1).

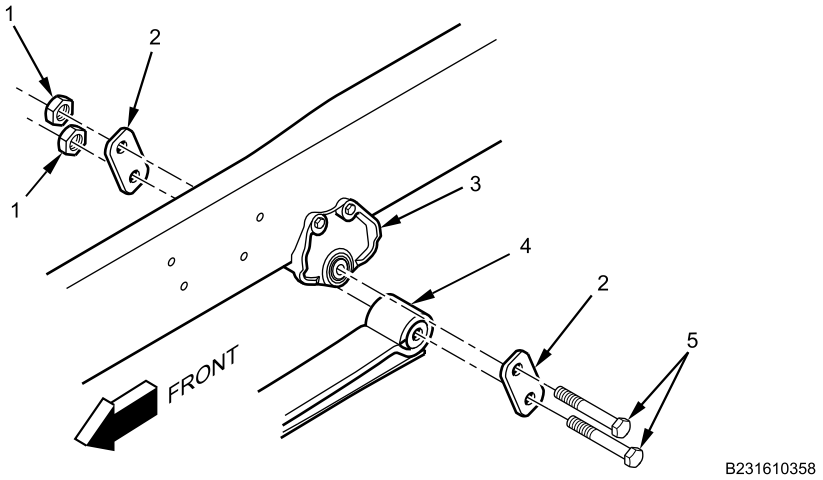

Figure 2. Front Spring Shackle.

2. Install two shackle plates (Figure 2, Item 2), shackle bolts (Figure 2, Item 5), and locknuts (Figure 2, Item 1) on front spring rear bracket (Figure 2, Item 3) and front spring (Figure 2, Item 4). Torque locknuts to 200-240 lb-ft (271-325 N•m).
3. Raise front of vehicle with hydraulic jack, remove jackstands from right and left frame rails, and lower front of vehicle to ground.

END OF TASK

FRONT SPRING SHACKLE REMOVAL AND INSTALLATION - (CONTINUED)

FOLLOW-ON MAINTENANCE

1. Turn MAIN POWER switch on (TM 9-2355-106-10).
2. Remove wheel chocks (TM 9-2355-106-10).
3. Test-drive vehicle to verify front spring shackle operation.
4. Set vehicle parking brake (TM 9-2355-106-10).
5. Set transmission in NEUTRAL (N) (TM 9-2355-106-10).
6. Turn engine off (TM 9-2355-106-10).
7. Turn MAIN POWER switch off (TM 9-2355-106-10).
8. Chock wheels (TM 9-2355-106-10).
9. Install belly armor (WP 0606).
10. Remove wheel chocks (TM 9-2355-106-10).

END OF TASK

END OF WORK PACKAGE

FIELD MAINTENANCE

FRONT SPRING ASSEMBLY REMOVAL AND INSTALLATION

INITIAL SETUP:

Tools and Special Tools
General Mechanic's Tool Kit (GMTK) (WP 0795, Item 37)
Wrench, torque, 50-250 lb-ft, 1/2-inch drive (WP 0795, Item 143)
Wrench, torque, click, ratcheting, 15-75 lb-ft, 3/8-inch drive (WP 0795, Item 145)
Wrench, torque, 90-600 lb-ft, 3/4-inch drive (WP 0795, Item 144)
Adapter, socket wrench, 3/8-inch drive female - 1/2-inch male (WP 0795, Item 2)
Socket, deep well, 1/2-inch drive, 6 pt, 15/16 inch (WP 0795, Item 98)
Socket, deep well, 3/4-inch drive, 6 pt, 1-1/4 inch (WP 0795, Item 99)
Adapter, socket, wrench drive, 3/4-inch female - 1/2-inch male (WP 0795, Item 4)
Socket, deep-well, 1/2-inch drive, 12 pt, 1-1/2 inch, chrome (WP 0795, Item 102)
Wrench, combination, 1-1/2 inch (WP 0795, Item 132)
Bar, breaker, 3/4-inch drive, chrome (WP 0795, Item 13)
C-clamp, deep throat, 0-6 inch capacity (WP 0795, Item 24)
Jack, floor, 20-ton (WP 0795, Item 59)
Jackstand, 10-ton, 30–52-inches, (2) (WP 0795, Item 63)
Jackstand, 10-ton, 19–28.5-inches, (2) (WP 0795, Item 62)

Materials/Parts
Compound (WP 0794, Item 13)
Gloves (WP 0794, Item 18)
Faceshield, industrial (WP 0794, Item 16)
Goggles, industrial (WP 0794, Item 20)
Locknut - (4) (WP 0796, Item 44)
Locknut - (2) (WP 0796, Item 16)

Personnel Required
Maintainer - (2)

References
TM 9-2355-106-10
TM 9-2355-106-23P
WP 0782

Equipment Condition
Parking brake set (TM 9-2355-106-10)
Transmission set in NEUTRAL (N) (TM 9-2355-106-10)
Engine off (TM 9-2355-106-10)
MAIN POWER switch off (TM 9-2355-106-10)
Wheels chocked (TM 9-2355-106-10)
Belly armor removed (WP 0606)

FRONT SPRING ASSEMBLY REMOVAL AND INSTALLATION - (CONTINUED)

REMOVAL

NOTE

Left side shown, right side similar.

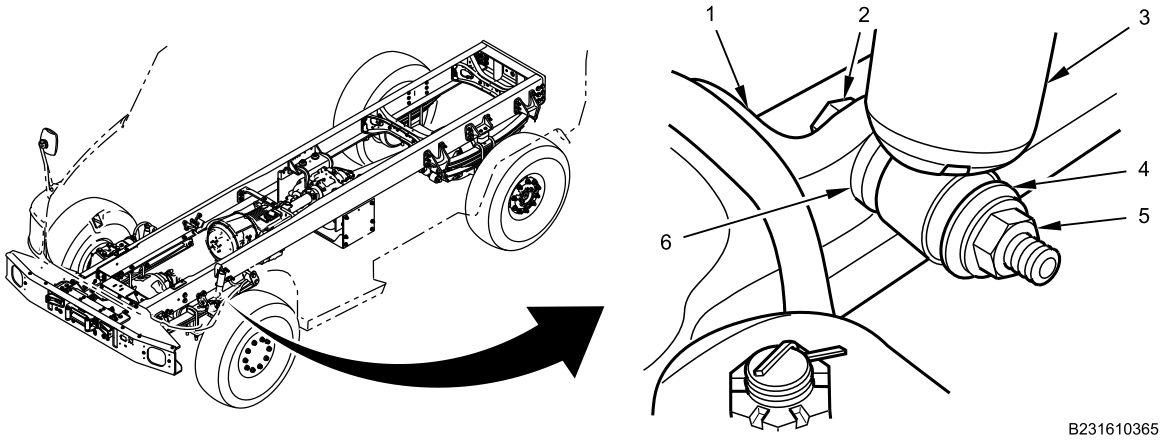

Figure 1. Shock Absorber Lower Mount.

1. Remove shock absorber nut (Figure 1, Item 5), washer (Figure 1, Item 4), bolt (Figure 1, Item 2), washer (Figure 1, Item 6), and shock absorber (Figure 1, Item 3) from U-bolt seat (Figure 1, Item 1).

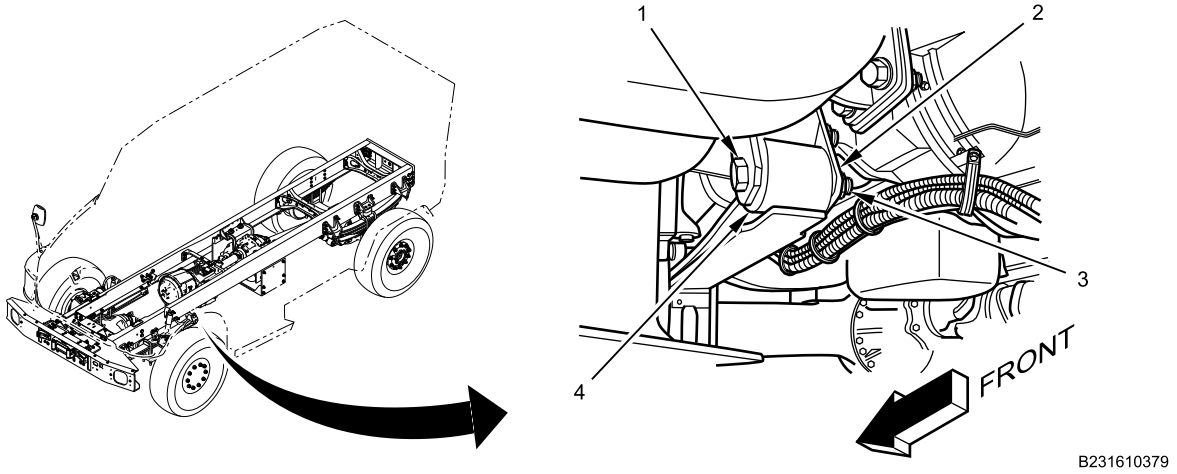

Figure 2. Front Spring Rear Shackle.

2. Loosen lower locknut (Figure 2, Item 3) and bolt (Figure 2, Item 1) in front spring rear bracket shackle (Figure 2, Item 2) and front spring (Figure 2, Item 4).

FRONT SPRING ASSEMBLY REMOVAL AND INSTALLATION - (CONTINUED)

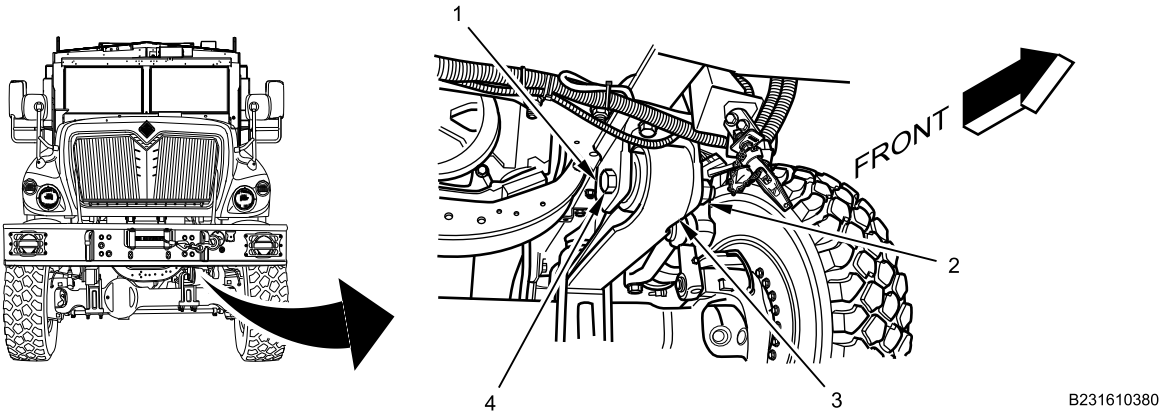

Figure 3. Front Spring Front Bracket.

3. Loosen locknut (Figure 3, Item 2) and bolt (Figure 3, Item 4) in front spring front bracket (Figure 3, Item 1) and front spring (Figure 3, Item 3).

FRONT SPRING ASSEMBLY REMOVAL AND INSTALLATION - (CONTINUED)

WARNING

Before lifting vehicle off ground, make sure it is parked on level surface. Set parking brake and chock wheels. Use hydraulic jack to lift vehicle. Jackstands and hydraulic jack must be used on a stable surface capable of supporting the combined weight of the vehicle being lifted and the lifting equipment. Do not use jack alone to support vehicle. Never work under or near a vehicle supported only by jack or lifting device. Use rated jackstands under frame rails to properly support vehicle. Do not support vehicle under front and rear axles. Use additional jackstands as necessary to support vehicle components during removal and installation procedures. Failure to comply may result in damage to equipment and serious injury or death to personnel.

4. With assistant, raise front of vehicle with hydraulic jack (Figure 4, Item 1) to relieve spring tension on shackle bolt (Figure 2, Item 1) and bracket bolt (Figure 3, Item 4).

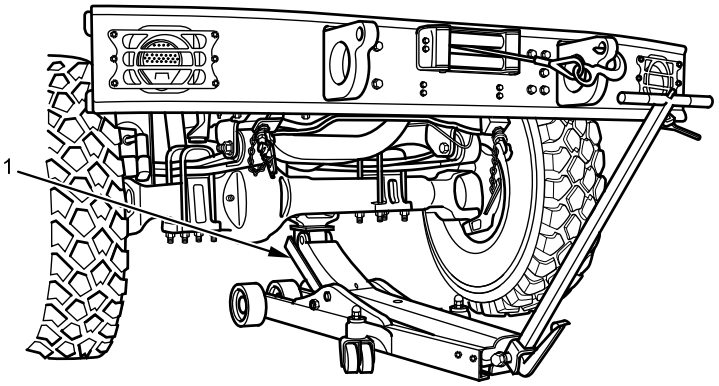

B231010373

Figure 4. Raising Front of Vehicle.

FRONT SPRING ASSEMBLY REMOVAL AND INSTALLATION - (CONTINUED)

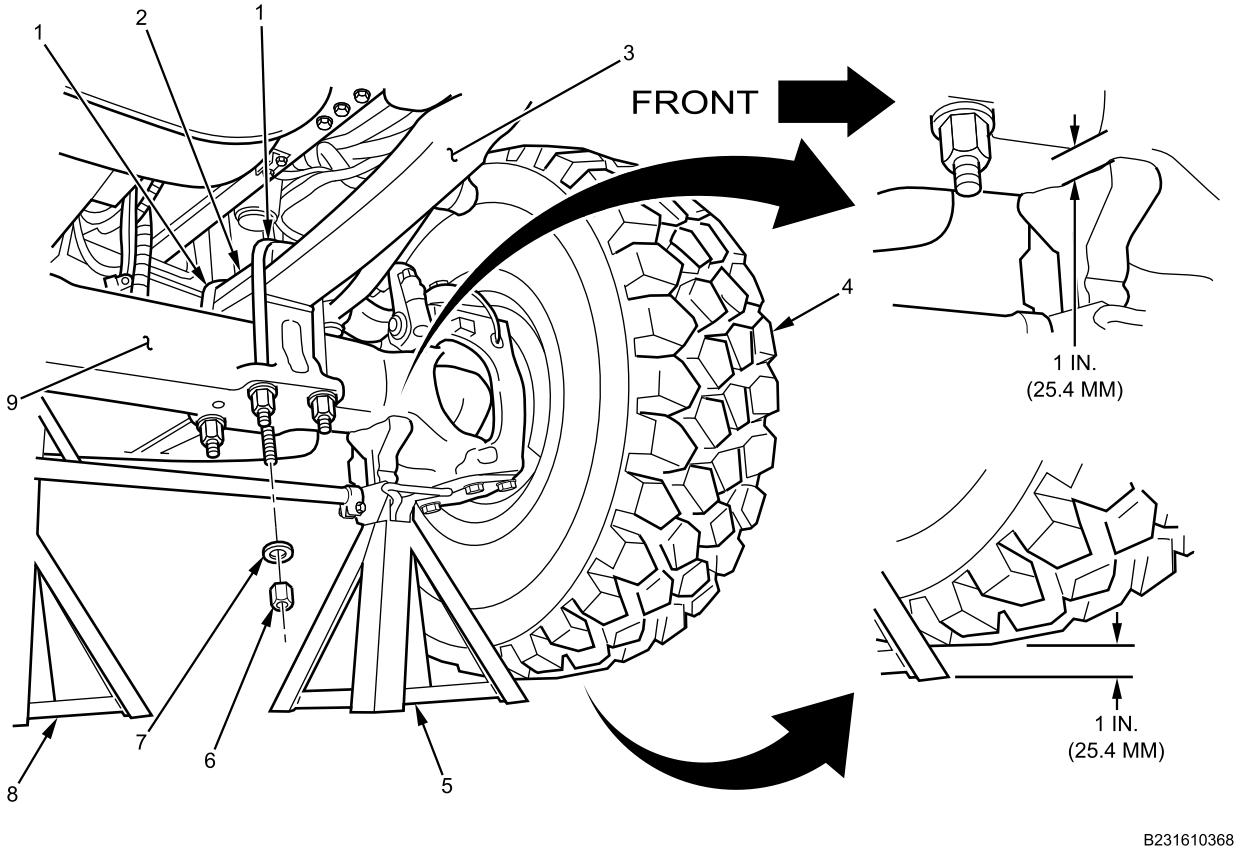

Figure 5. Front Spring Removal.

5. Position jackstands (Figure 5, Item 8) under right and left frame rails so there is approximately 1 inch (25.4 mm) clearance between tire (Figure 5, Item 4) and floor.
6. Position jackstand (Figure 5, Item 5) under axle (Figure 5, Item 9) so there is approximately 1 inch (25.4 mm) clearance between axle (Figure 5, Item 9) and jackstand (Figure 5, Item 5).
7. Loosen four locknuts (Figure 5, Item 6) evenly in a diagonal sequence until axle (Figure 5, Item 9) rests on jackstand (Figure 5, Item 5).
8. Remove four locknuts (Figure 5, Item 6) and washers (Figure 5, Item 7). Discard locknuts (Figure 5, Item 6).
9. Remove front spring U-bolts (Figure 5, Item 1) from front spring (Figure 5, Item 3) and axle (Figure 5, Item 9).
10. Remove front U-bolt seat (Figure 5, Item 2) from front spring (Figure 5, Item 3).

FRONT SPRING ASSEMBLY REMOVAL AND INSTALLATION - (CONTINUED)

11. Remove locknut (Figure 6, Item 3) and bolt (Figure 6, Item 1) from front spring rear bracket shackle (Figure 6, Item 2) and spring (Figure 6, Item 4). Discard shackle locknut (Figure 6, Item 3).

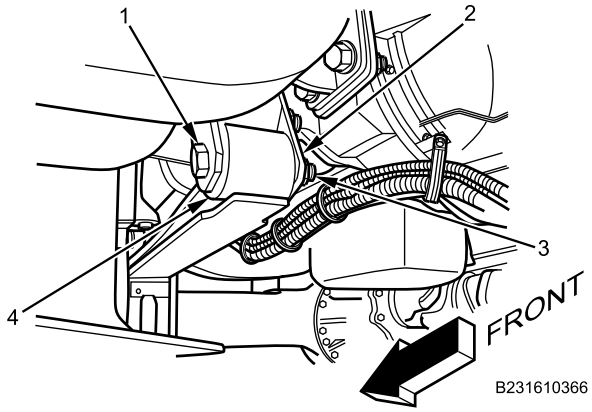

Figure 6. Front Spring Shackle.

12. Remove locknut (Figure 7, Item 2), washer, and bolt (Figure 7, Item 4) from front spring front bracket (Figure 7, Item 1) and front spring (Figure 7, Item 3). Discard locknut (Figure 7, Item 2).

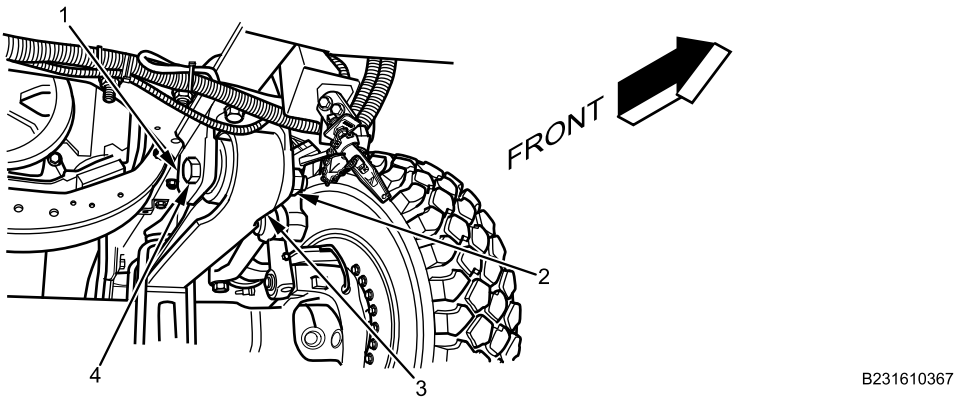

Figure 7. Front Spring Front Bracket.

13. With assistant, remove front spring (Figure 7, Item 3) from vehicle.

END OF TASK

FRONT SPRING ASSEMBLY REMOVAL AND INSTALLATION - (CONTINUED)

INSTALLATION

WARNING

Corrosion preventive compound is toxic. Use only in well-ventilated area. Do not get in eyes; wear chemical safety goggles and full-face shield when using. Avoid contact with skin and wear rubber or plastic, solvent-resistant gloves. In case of contact, remove contaminated clothing and immediately wash area with soap and water. If compound contacts eyes, flush eyes with large amounts of water for at least 15 minutes and get immediate medical attention. If swallowed, do not induce vomiting; contact a physician immediately. Failure to comply may result in serious injury or death to personnel.

1. With assistant, position front spring on vehicle.

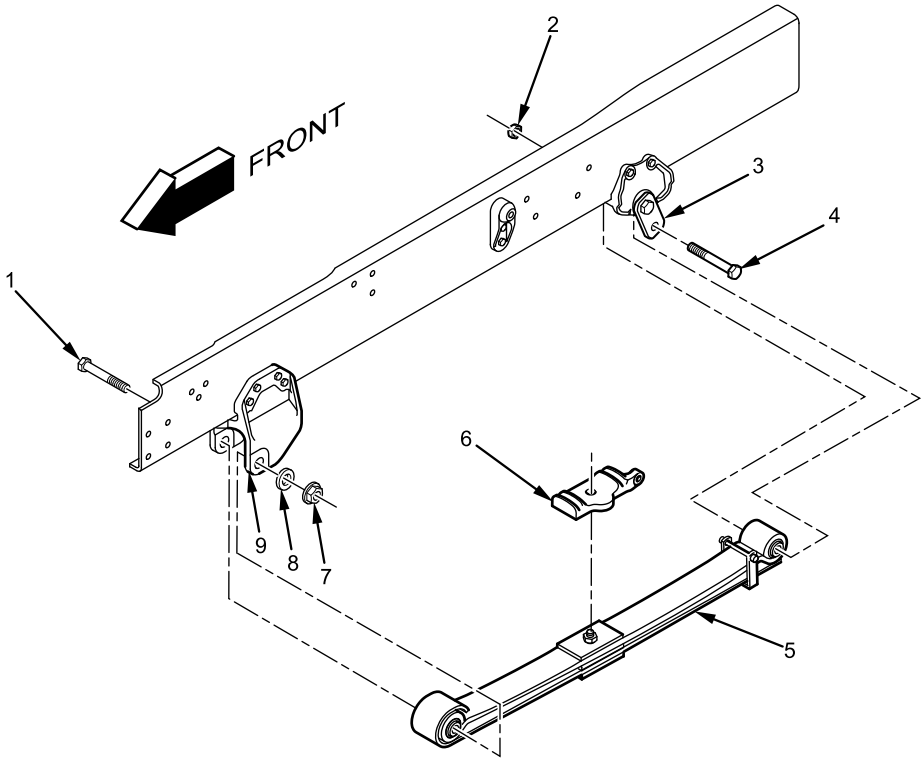

Figure 8. Front Spring Installation.

2. Loosely install bolt (Figure 8, Item 1), washer (Figure 8, Item 8), and new locknut (Figure 8, Item 7) on front spring front bracket (Figure 8, Item 9) and front spring (Figure 8, Item 5).
3. Loosely install lower bolt (Figure 8, Item 4) and new locknut (Figure 8, Item 2) on front spring rear bracket shackle (Figure 8, Item 3) and front spring (Figure 8, Item 5).
4. Install U-bolt seat (Figure 8, Item 6) on front spring (Figure 8, Item 5).

FRONT SPRING ASSEMBLY REMOVAL AND INSTALLATION - (CONTINUED)

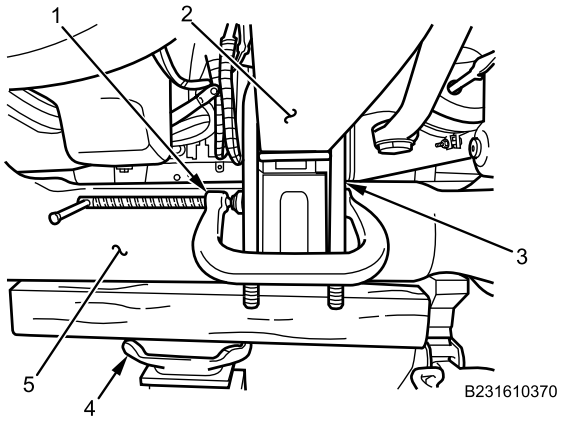

Figure 9. Front Spring U-Bolts Installation.

5. Using C-clamp (Figure 9, Item 1), install front spring U-bolts (Figure 9, Item 3) on front spring (Figure 9, Item 2) and axle (Figure 9, Item 5).
6. With hydraulic jack (Figure 9, Item 4), raise axle (Figure 9, Item 5) until axle lightly contacts spring (Figure 9, Item 2).

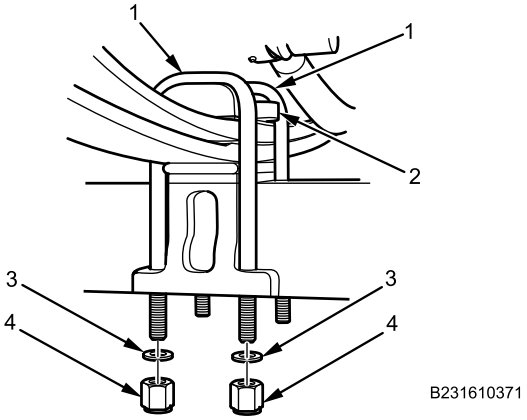

Figure 10. Front Spring and U-Bolts.

7. Apply corrosion preventive compound to four U-bolt washers (Figure 10, Item 3) and new locknuts (Figure 10, Item 4).
8. Install four U-bolt washers (Figure 10, Item 3) and locknuts (Figure 10, Item 4) on front spring U-bolts (Figure 10, Item 1), ensuring U-bolts are seated in U-bolt seat (Figure 10, Item 2).

FRONT SPRING ASSEMBLY REMOVAL AND INSTALLATION - (CONTINUED)

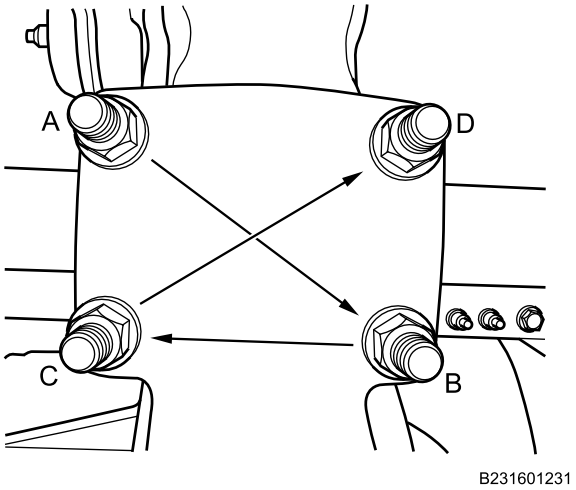

Figure 11. Front Spring U-Bolt Tightening Sequence.

9. Torque four U-bolt nuts in the diagonal sequence shown, in the following increments:
   a. Torque all to 15 lb-ft (20 N•m).
   b. Torque all to 100 lb-ft (135 N•m).
   c. Torque all to 200 lb-ft (270 N•m).
   d. Torque all to 300 lb-ft (407 N•m).
   e. Torque all to 370-400 lb-ft (502-542 N•m).
10. With assistant, raise front of vehicle with hydraulic jack, remove jackstands from right and left frame rails, and lower front of vehicle.

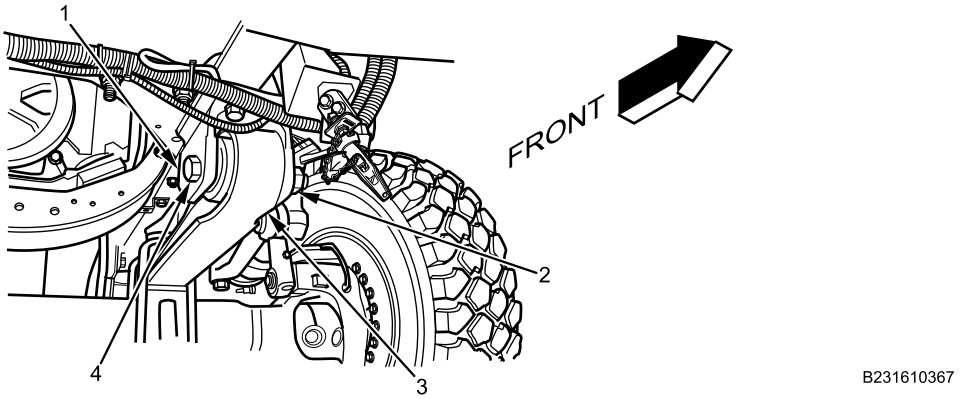

Figure 12. Front Spring Front Bracket.

11. Torque locknut (Figure 12, Item 2) and bolt (Figure 12, Item 4) on front spring bracket (Figure 12, Item 1) and spring (Figure 12, Item 3) to 200-240 lb-ft (270-325 N•m).

FRONT SPRING ASSEMBLY REMOVAL AND INSTALLATION - (CONTINUED)

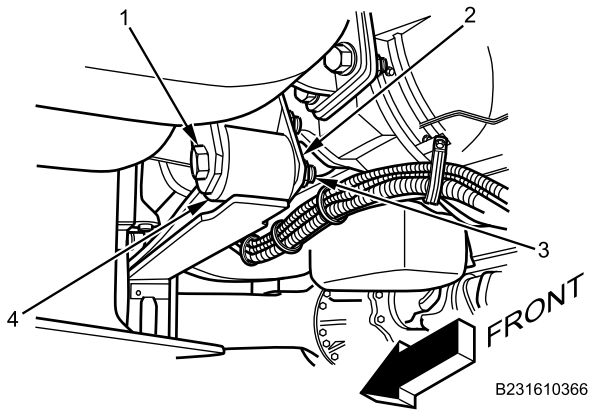

Figure 13. Front Spring Shackle.

12. Torque lower locknut (Figure 13, Item 3) and bolt (Figure 13, Item 1) on rear shackle (Figure 13, Item 2) and spring (Figure 13, Item 4) to 200-240 lb-ft (270-325 N•m).

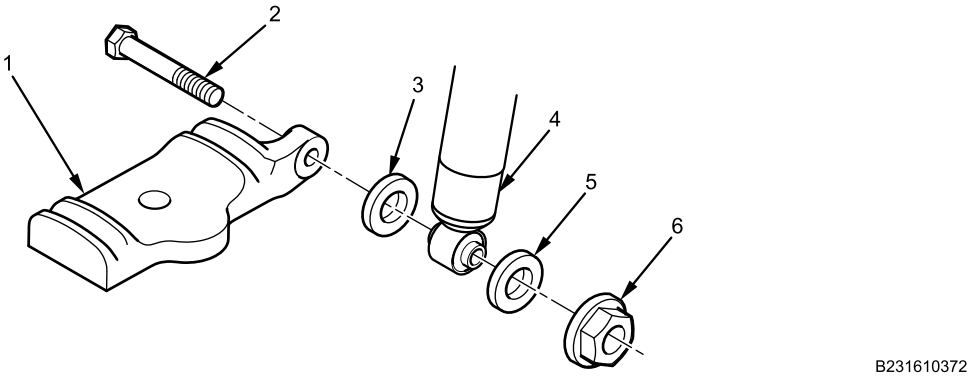

Figure 14. Shock Absorber Lower Mount.

13. Install shock absorber bolt (Figure 14, Item 2), washer (Figure 14, Item 3), shock absorber (Figure 14, Item 4), washer (Figure 14, Item 5), and nut (Figure 14, Item 6) on U-bolt seat (Figure 14, Item 1). Torque shock absorber nut (Figure 14, Item 6) to 135-165 lb-ft (183-224 N•m).

END OF TASK

FRONT SPRING ASSEMBLY REMOVAL AND INSTALLATION - (CONTINUED)

FOLLOW-ON MAINTENANCE

1. Turn MAIN POWER switch on (TM 9-2355-106-10).
2. Start vehicle (TM 9-2355-106-10).
3. Remove wheel chocks (TM 9-2355-106-10).
4. Test-drive vehicle to verify front suspension operation (TM 9-2355-106-10).
5. Set transmission in NEUTRAL (N) (TM 9-2355-106-10).
6. Set vehicle parking brake (TM 9-2355-106-10).
7. Turn engine off (TM 9-2355-106-10).
8. Turn MAIN POWER switch off (TM 9-2355-106-10).
9. Chock wheels (TM 9-2355-106-10).
10. Install belly armor (WP 0606).
11. Remove wheel chocks (TM 9-2355-106-10).

END OF TASK

END OF WORK PACKAGE

FIELD MAINTENANCE

FRONT SHOCK ABSORBER REMOVAL AND INSTALLATION

INITIAL SETUP:

Tools and Special Tools
General Mechanic's Tool Kit (GMTK) (WP 0795, Item 37)
Wrench, torque, 50-250 lb-ft, 1/2-inch drive (WP 0795, Item 143)

Materials/Parts
Gloves (WP 0794, Item 18)
Faceshield, industrial (WP 0794, Item 16)
Goggles, industrial (WP 0794, Item 20)
Compound (WP 0794, Item 13)

References
TM 9-2355-106-10
TM 9-2355-106-23P
WP 0782

Equipment Condition
Parking brake set (TM 9-2355-106-10)
Transmission set in NEUTRAL (N) (TM 9-2355-106-10)
Engine shut off (TM 9-2355-106-10)
MAIN POWER switch off (TM 9-2355-106-10)
Wheels chocked (TM 9-2355-106-10)

NOTE

Note orientation of shock absorber to ensure proper installation.

REMOVAL

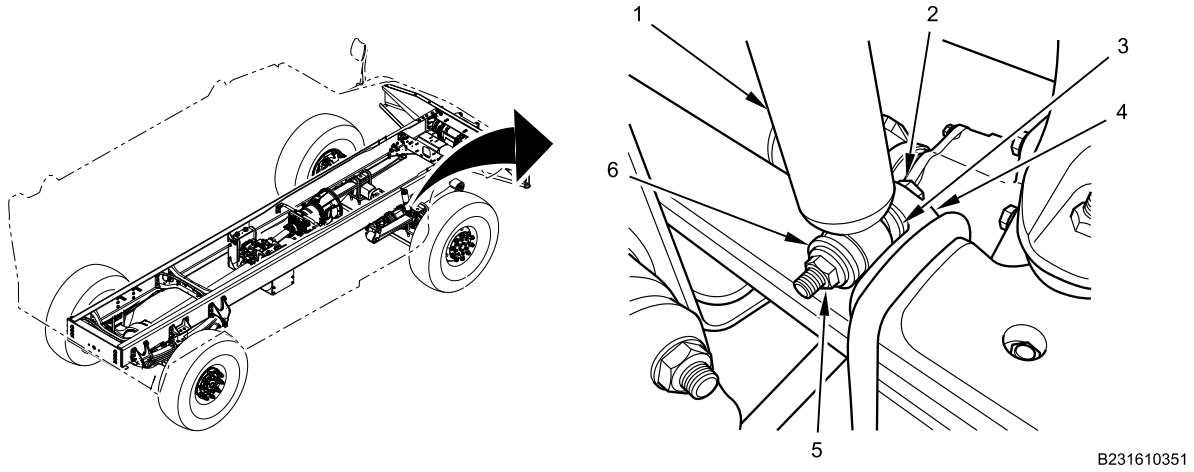

Figure 1. Front Shock Absorber Lower Mount Removal.

1. Remove nut (Figure 1, Item 5), and washer (Figure 1, Item 6) from front shock absorber lower bolt (Figure 1, Item 2).
2. Remove lower bolt (Figure 1, Item 2) and inner washer (Figure 1, Item 3) from front shock absorber (Figure 1, Item 1) and lower mount (Figure 1, Item 4).

FRONT SHOCK ABSORBER REMOVAL AND INSTALLATION - (CONTINUED)

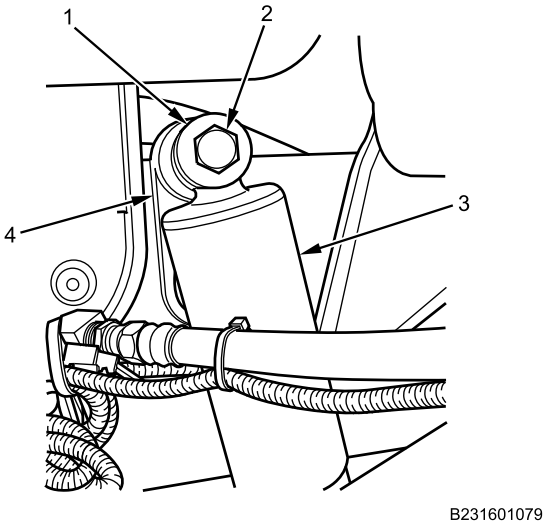

Figure 2. Front Shock Absorber Upper Mount Removal.

3. Remove upper bolt (Figure 2, Item 2), and upper washer (Figure 2, Item 1), from front shock absorber upper mount (Figure 2, Item 4).
4. Remove front shock absorber (Figure 2, Item 3).

END OF TASK

INSTALLATION

WARNING

Corrosion preventive compound is toxic. Use only in well-ventilated area. Do not get in eyes; wear chemical safety goggles and full-face shield when using. Avoid contact with skin and wear rubber or plastic, solvent-resistant gloves. In case of contact, remove contaminated clothing and immediately wash area with soap and water. If compound contacts eyes, flush eyes with large amounts of water for at least 15 minutes and get immediate medical attention. If swallowed, do not induce vomiting; contact a physician immediately. Failure to comply may result in serious injury or death to personnel.

1. Install front shock absorber (Figure 3, Item 3) with dust shield (Figure 3, Item 2) at front shock absorber upper eyelet (Figure 3, Item 1).
2. Apply corrosion preventive compound to upper bolt (Figure 3, Item 2), and washer (Figure 3, Item 1).

FRONT SHOCK ABSORBER REMOVAL AND INSTALLATION - (CONTINUED)

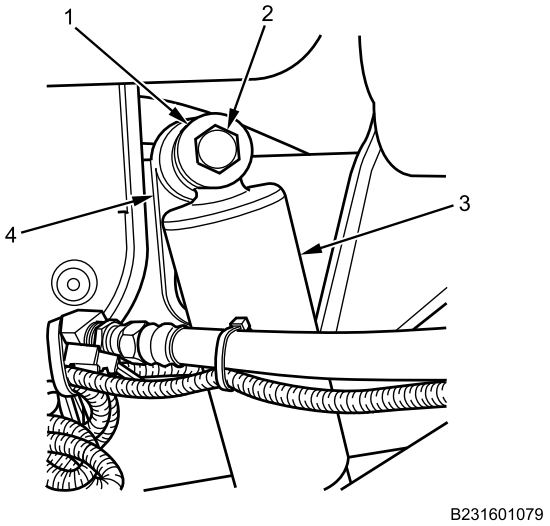

Figure 3. Front Shock Absorber Upper Mount Installation.

3. Position upper eyelet (Figure 3, Item 3) on upper mount (Figure 3, Item 4). Install bolt (Figure 3, Item 2) through upper washer (Figure 3, Item 1), upper eyelet (Figure 3, Item 3), and upper mount (Figure 3, Item 4).

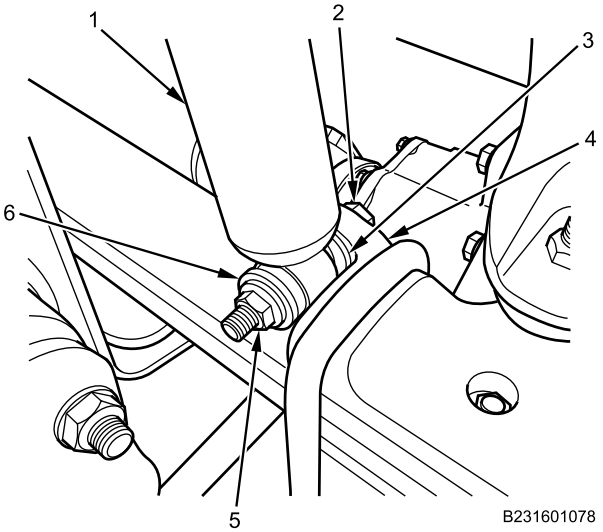

Figure 4. Front Shock Absorber Lower Mount Installation.

4. Apply corrosion preventive compound to lower bolt (Figure 4, Item 2), inner washer (Figure 4, Item 3), outer washer (Figure 4, Item 6), and lower nut (Figure 4, Item 5).
5. Install lower bolt (Figure 4, Item 2) through lower mount (Figure 4, Item 4), inner washer (Figure 4, Item 3), and lower eyelet (Figure 4, Item 1).
6. Install lower outer washer (Figure 4, Item 6) and lower nut (Figure 4, Item 5) on lower bolt (Figure 4, Item 2).
7. Torque upper bolt (Figure 3, Item 2) and lower nut (Figure 3, Item 5) to 135-165 lb-ft (183-224 N•m).

END OF TASK

FRONT SHOCK ABSORBER REMOVAL AND INSTALLATION - (CONTINUED)

FOLLOW-ON MAINTENANCE

1. Turn MAIN POWER switch on (TM 9-2355-106-10).
2. Remove wheel chocks (TM 9-2355-106-10).
3. Test-drive vehicle to verify front shock absorber operation.
4. Set transmission in NEUTRAL (N) (TM 9-2355-106-10).
5. Set vehicle parking brake (TM 9-2355-106-10).
6. Turn engine off (TM 9-2355-106-10).
7. Turn MAIN POWER switch off (TM 9-2355-106-10).

END OF TASK

END OF WORK PACKAGE

FIELD MAINTENANCE

FRONT SHOCK ABSORBER LOWER MOUNTING BRACKET REMOVAL AND INSTALLATION

INITIAL SETUP:

Tools and Special Tools
General Mechanic's Tool Kit (GMTK) (WP 0795, Item 37)
C-clamp, deep throat, 0-6 inch capacity (WP 0795, Item 24)
Socket, standard, impact, 3/4-inch drive, 6 pt, 1-1/4 inch (WP 0795, Item 111)
Wrench, torque, click, ratcheting, 15-75 lb-ft, 3/8-inch drive (WP 0795, Item 145)
Wrench, torque, 90-600 lb-ft, 3/4-inch drive (WP 0795, Item 144)

Materials/Parts
Compound (WP 0794, Item 13)
Gloves (WP 0794, Item 18)
Faceshield, industrial (WP 0794, Item 16)
Goggles, industrial (WP 0794, Item 20)
Locknut - (4) (WP 0796, Item 44)

References
TM 9-2355-106-10
TM 9-2355-106-23P
WP 0782

Equipment Condition
Parking brake set (TM 9-2355-106-10)
Transmission set in NEUTRAL (N) (TM 9-2355-106-10)
Engine shut off (TM 9-2355-106-10)
MAIN POWER switch off (TM 9-2355-106-10)
Wheels chocked (TM 9-2355-106-10)
Front shock absorber removed (WP 0560)

REMOVAL

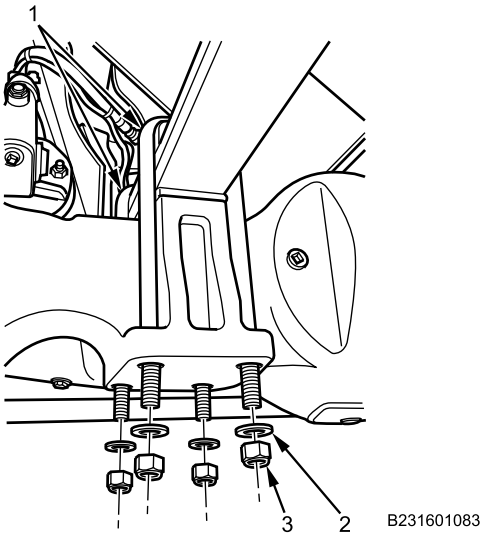

Figure 1. Front Shock Absorber Lower Mounting Bracket Removal, U-Bolts, Locknuts and Washers.

1. Remove four front spring U-bolt locknuts (Figure 1, Item 3) and washers (Figure 1, Item 2) from front spring U-bolts (Figure 1, Item 1). Discard locknuts.

FRONT SHOCK ABSORBER LOWER MOUNTING BRACKET REMOVAL AND INSTALLATION - (CONTINUED)

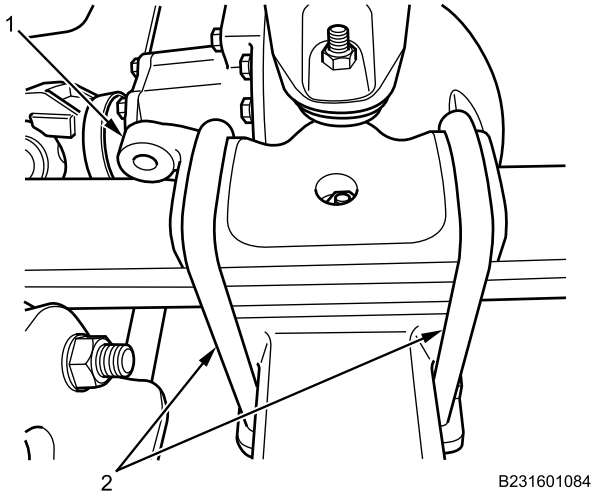

Figure 2. Front Shock Absorber Lower Mounting Bracket Removal.

2. Remove U-bolts (Figure 2, Item 2) and front shock absorber lower mounting bracket (Figure 2, Item 1) from front spring assembly.

END OF TASK

INSTALLATION

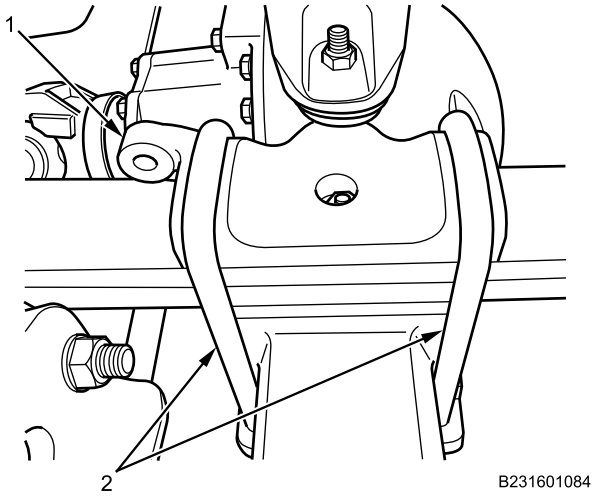

Figure 3. Front Shock Absorber Lower Mounting Bracket Installation.

1. Install front shock absorber lower mounting bracket (Figure 3, Item 1) on front spring assembly.

NOTE

Use C-clamp to squeeze U-bolts together if U-bolts do not align with holes in mounting bracket.

2. Install U-bolts (Figure 3, Item 2) on front shock absorber lower mounting bracket (Figure 3, Item 1).

FRONT SHOCK ABSORBER LOWER MOUNTING BRACKET REMOVAL AND INSTALLATION - (CONTINUED)

WARNING

Corrosion preventive compound is toxic. Use only in well-ventilated area. Do not get in eyes; wear chemical safety goggles and full-face shield when using. Avoid contact with skin and wear rubber or plastic, solvent-resistant gloves. In case of contact, remove contaminated clothing and immediately wash area with soap and water. If compound contacts eyes, flush eyes with large amounts of water for at least 15 minutes and get immediate medical attention. If swallowed, do not induce vomiting; contact a physician immediately. Failure to comply may result in serious injury or death to personnel.

3. Apply corrosion preventive compound to front spring U-bolts, (Figure 4, Item 1) new front spring U-bolt locknuts (Figure 4, Item 3), and washers (Figure 4, Item 2).

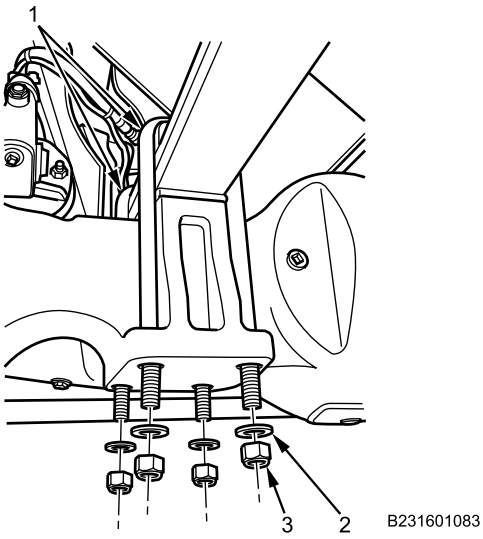

Figure 4. Front Shock Absorber Lower Mounting Bracket Installation, U-Bolt Locknuts and Washers.

4. Install four front spring U-bolt washers (Figure 4, Item 2) and U-bolt locknuts (Figure 4, Item 3) on front spring U-bolts (Figure 4, Item 1).

FRONT SHOCK ABSORBER LOWER MOUNTING BRACKET REMOVAL AND INSTALLATION - (CONTINUED)

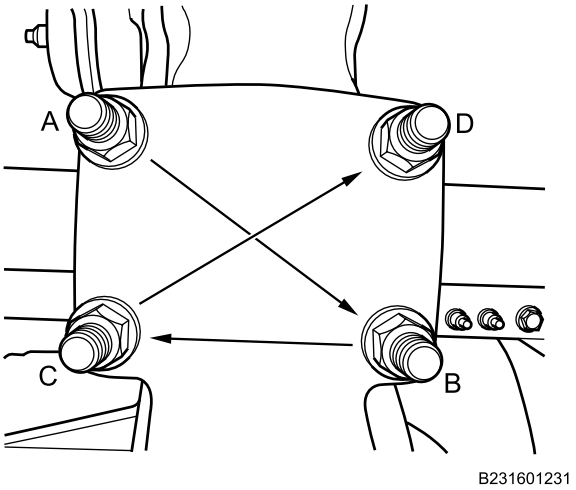

Figure 5. Front Spring U-Bolt Tightening Sequence.

5. Torque four U-bolt locknuts in the diagonal sequence shown, in the following increments:
   a. Torque all to 15 lb-ft (20 N•m).
   b. Torque all to 100 lb-ft (135 N•m).
   c. Torque all to 200 lb-ft (270 N•m).
   d. Torque all to 300 lb-ft (407 N•m).
   e. Torque all to 370-400 lb-ft (502-542 N•m).

END OF TASK

FOLLOW-ON MAINTENANCE

1. Install front shock absorber (WP 0560).
2. Remove wheel chocks (TM 9-2355-106-10).
3. Turn MAIN POWER switch on (TM 9-2355-106-10).
4. Test-drive vehicle to verify front shock absorber lower mount operation.
5. Set transmission in NEUTRAL (N) (TM 9-2355-106-10).
6. Set vehicle parking brake (TM 9-2355-106-10).
7. Turn engine off (TM 9-2355-106-10).
8. Turn MAIN POWER switch off (TM 9-2355-106-10).

END OF TASK

END OF WORK PACKAGE

FIELD MAINTENANCE

FRONT SHOCK ABSORBER UPPER MOUNTING BRACKET REMOVAL AND INSTALLATION

INITIAL SETUP:

Tools and Special Tools
General Mechanic's Tool Kit (GMTK) (WP 0795, Item 37)
Wrench, torque, 50-250 lb-ft, 1/2-inch drive (WP 0795, Item 143)

Materials/Parts
Gloves (WP 0794, Item 18)
Faceshield, industrial (WP 0794, Item 16)
Goggles, industrial (WP 0794, Item 20)
Compound (WP 0794, Item 13)

Personnel Required
Maintainer - (2)

References
TM 9-2355-106-10
TM 9-2355-106-23P
WP 0782

Equipment Condition
Parking brake set (TM 9-2355-106-10)
Transmission set in NEUTRAL (N) (TM 9-2355-106-10)
Engine shut off (TM 9-2355-106-10)
MAIN POWER switch off (TM 9-2355-106-10)
Wheels chocked (TM 9-2355-106-10)
Front shock absorber removed (WP 0560)

REMOVAL

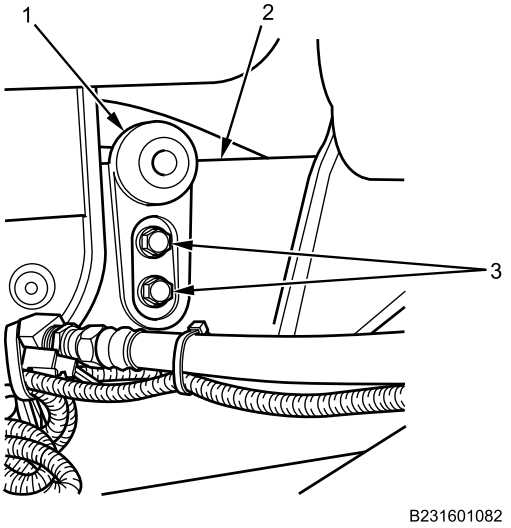

Figure 1. Front Shock Absorber Upper Mounting Bracket Removal.

1. With assistant, remove bolts (Figure 1, Item 3) and nuts, and remove front shock absorber upper mounting bracket (Figure 1, Item 1) from frame (Figure 1, Item 2).

END OF TASK

FRONT SHOCK ABSORBER UPPER MOUNTING BRACKET REMOVAL AND INSTALLATION - (CONTINUED)

INSTALLATION

WARNING

Corrosion preventive compound is toxic. Use only in well-ventilated area. Do not get in eyes; wear chemical safety goggles and full-face shield when using. Avoid contact with skin and wear rubber or plastic, solvent-resistant gloves. In case of contact, remove contaminated clothing and immediately wash area with soap and water. If compound contacts eyes, flush eyes with large amounts of water for at least 15 minutes and get immediate medical attention. If swallowed, do not induce vomiting; contact a physician immediately. Failure to comply may result in serious injury or death to personnel.

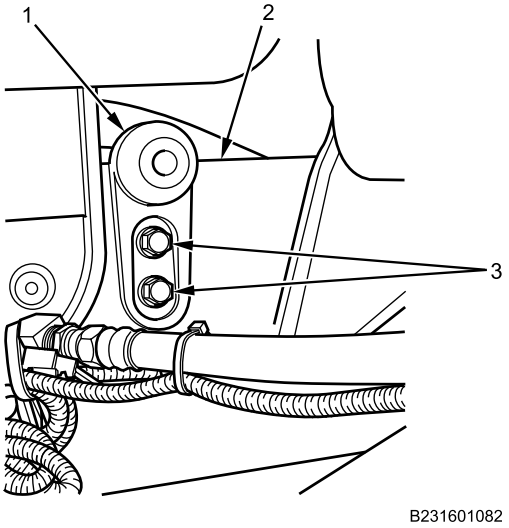

Figure 2. Front Shock Absorber Upper Mounting Bracket Installation.

1. Apply corrosion preventive compound to front shock absorber upper mounting bracket bolts (Figure 2, Item 3).
2. Position front shock absorber upper mounting bracket (Figure 2, Item 1) on frame (Figure 2, Item 2). With assistant, install bolts (Figure 2, Item 3) and nuts.
3. Torque bolts (Figure 2, Item 3) to 135-165 lb-ft (183-224 N•m).

END OF TASK

FRONT SHOCK ABSORBER UPPER MOUNTING BRACKET REMOVAL AND INSTALLATION - (CONTINUED)

FOLLOW-ON MAINTENANCE

1. Install front shock absorber (WP 0560).
2. Remove wheel chocks (TM 9-2355-106-10).
3. Turn MAIN POWER switch on (TM 9-2355-106-10).
4. Test-drive vehicle to verify front shock absorber upper mount operation.
5. Set transmission in NEUTRAL (N) (TM 9-2355-106-10).
6. Set vehicle parking brake (TM 9-2355-106-10).
7. Turn engine off (TM 9-2355-106-10).
8. Turn MAIN POWER switch off (TM 9-2355-106-10).

END OF TASK

END OF WORK PACKAGE

FIELD MAINTENANCE

INSTRUMENT PANEL (IP) STORAGE BIN REMOVAL AND INSTALLATION

INITIAL SETUP:

Tools and Special Tools
General Mechanic's Tool Kit (GMTK) (WP 0795, Item 37)

References
TM 9-2355-106-10
TM 9-2355-106-23P
WP 0782

Equipment Condition
Parking brake set (TM 9-2355-106-10)
Transmission set in NEUTRAL (N) (TM 9-2355-106-10)
Engine off (TM 9-2355-106-10)
MAIN POWER switch off (TM 9-2355-106-10)
Wheels chocked (TM 9-2355-106-10)
Fire Suppression System (FSS) control unit bracket removed (WP 0738)

NOTE

Note storage bin orientation prior to removal to aid in proper installation.

REMOVAL

1. Squeeze storage bin retainers (Figure 1, Item 3) and pull storage bin (Figure 1, Item 1) from IP center trim panel (Figure 1, Item 4).

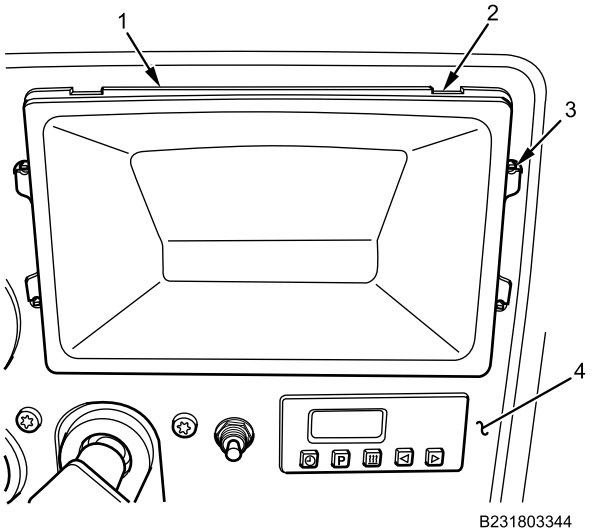

Figure 1. IP Storage Bin Removal.

END OF TASK

INSTRUMENT PANEL (IP) STORAGE BIN REMOVAL AND INSTALLATION - (CONTINUED)

INSTALLATION

1. With tabs up (Figure 2, Item 2), install storage bin (Figure 2, Item 1) in IP center trim panel (Figure 2, Item 4) and push forward to engage retainers (Figure 2, Item 3).

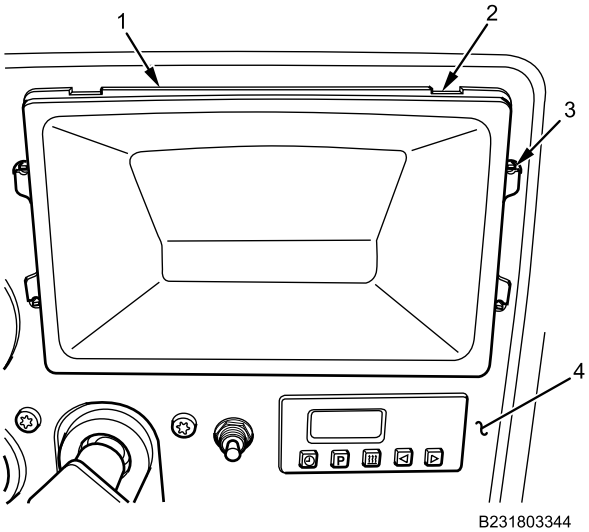

Figure 2. IP Storage Bin Installation.

END OF TASK

FOLLOW-ON MAINTENANCE

1. Install Fire Suppression System (FSS) control unit bracket (WP 0738).
2. Remove wheel chocks (TM 9-2355-106-10).

END OF TASK

END OF WORK PACKAGE

FIELD MAINTENANCE

CROSS-VEHICLE EQUIPMENT BRACKET REMOVAL AND INSTALLATION

INITIAL SETUP:

Tools and Special Tools
General Mechanic's Tool Kit (GMTK) (WP 0795, Item 37)
Wrench, torque, 20-100 lb-ft, 3/8-inch drive (WP 0795, Item 141)
Gloves, rubber (WP 0795, Item 38)

Materials/Parts
Gloves (WP 0794, Item 18)
Faceshield, industrial (WP 0794, Item 16)
Compound (WP 0794, Item 13)
Grease (WP 0794, Item 22)
Goggles, industrial (WP 0794, Item 20)

Personnel Required
Maintainer - (2)

References
TM 9-2355-106-10
TM 9-2355-106-23P
WP 0786
WP 0782

Equipment Condition
Parking brake set (TM 9-2355-106-10)
Transmission set in NEUTRAL (N) (TM 9-2355-106-10)
Engine off (TM 9-2355-106-10)
MAIN POWER switch off (TM 9-2355-106-10)
Wheels chocked (TM 9-2355-106-10)
Cowl panel removed (WP 0683)
A-piller cover trim panels removed (WP 0642)
Instrument panel cluster removed (WP 0578)
Instrument panel center closeout removed (WP 0579)
Instrument panel right side closeout removed (WP 0580)

REMOVAL

1. Remove and discard heated windshield wiring harness cable lock straps (Figure 1, Item 1).

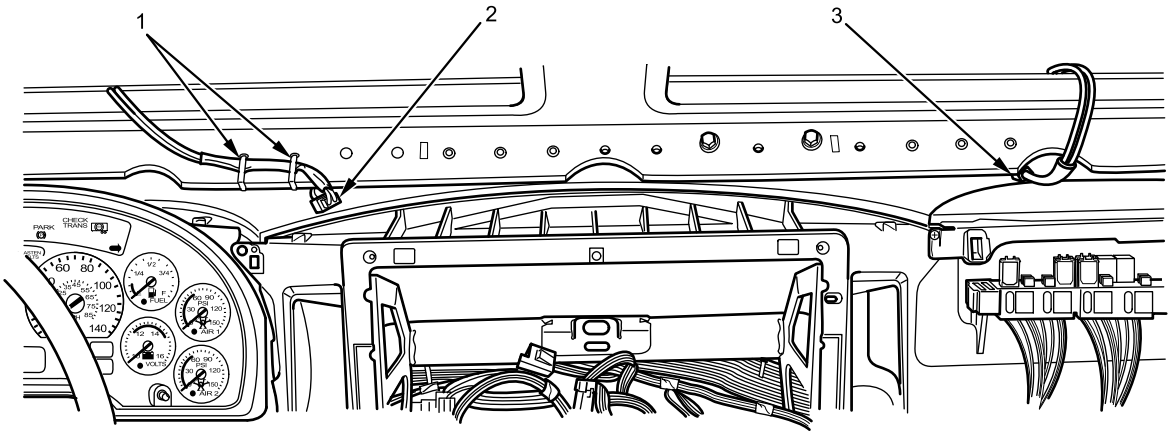

B231801344

Figure 1. Heated Windshield Harness.

2. Disconnect heated windshield wiring harness connectors (Figure 1, Item 2 and 3) from instrument panel wiring harness connectors.

CROSS-VEHICLE EQUIPMENT BRACKET REMOVAL AND INSTALLATION - (CONTINUED)

3. Identify exterior bolt locations (Figure 2, Item 1 through 5) for assistant in order to remove cross-vehicle equipment bracket.

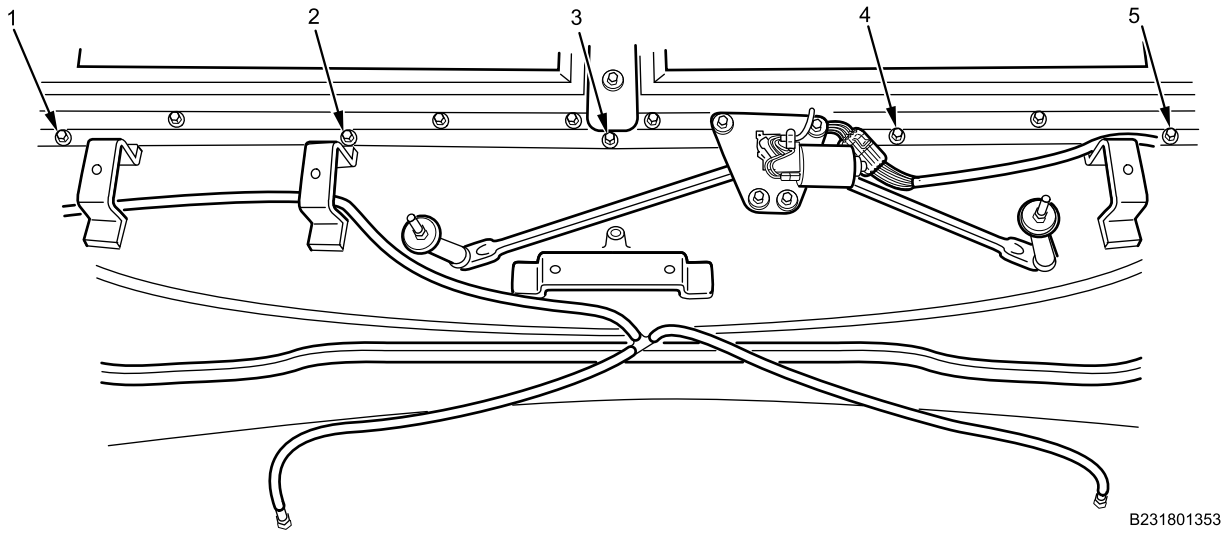

Figure 2. Cross-Vehicle Equipment Bracket Bolt Exterior Locations.

4. Remove nut (Figure 3, Item 1) from cross-vehicle equipment bracket bolt (Figure 2, Item 5).

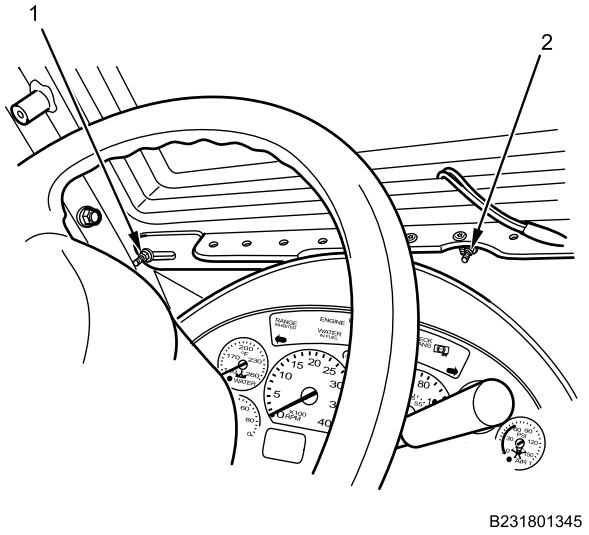

Figure 3. Cross-Vehicle Equipment Bracket Nut Left Side Interior Locations.

5. Remove nut (Figure 3, Item 2) from cross-vehicle equipment bracket bolt (Figure 2, Item 4).
6. Remove nut (Figure 4, Item 1) from cross-vehicle equipment bracket bolt (Figure 2, Item 3).

CROSS-VEHICLE EQUIPMENT BRACKET REMOVAL AND INSTALLATION - (CONTINUED)

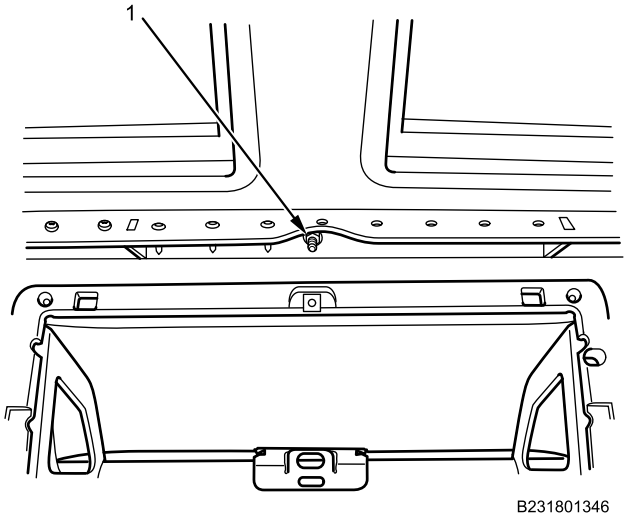

Figure 4. Cross-Vehicle Equipment Bracket Nut Center Interior Location.

7. Remove nut (Figure 5, Item 1) from cross-vehicle equipment bracket bolt (Figure 2, Item 2).

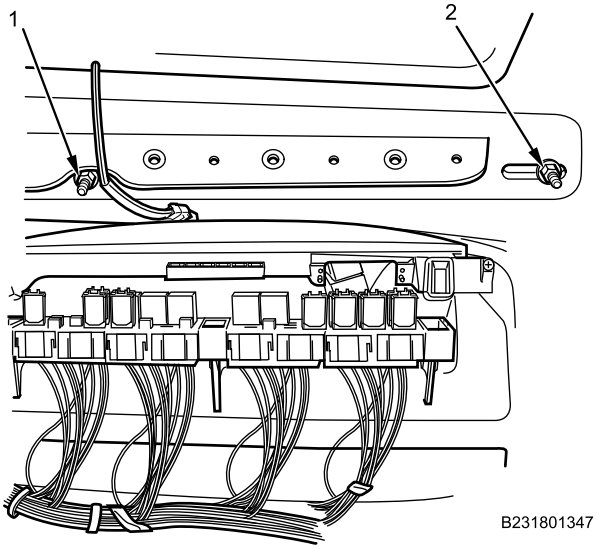

Figure 5. Cross-Vehicle Equipment Bracket Nut Right Side Interior Locations.

8. Remove nut (Figure 5, Item 2) from cross-vehicle equipment bracket bolt (Figure 2, Item 1).
9. Remove cross-vehicle equipment bracket from vehicle.
10. Remove cross-vehicle equipment bracket bolts (Figure 2, Item 1 through 5).

END OF TASK

CROSS-VEHICLE EQUIPMENT BRACKET REMOVAL AND INSTALLATION - (CONTINUED)

INSTALLATION

WARNING

Corrosion preventive compound is toxic. Use only in well-ventilated area. Do not get in eyes; wear chemical safety goggles and full-face shield when using. Avoid contact with skin and wear rubber or plastic, solvent-resistant gloves. In case of contact, remove contaminated clothing and immediately wash area with soap and water. If compound contacts eyes, flush eyes with large amounts of water for at least 15 minutes and get immediate medical attention. If swallowed, do not induce vomiting; contact a physician immediately. Failure to comply may result in serious injury or death to personnel.

1. Apply corrosion preventive compound to cross-vehicle equipment bracket bolts (Figure 6, Item 1 through 5).

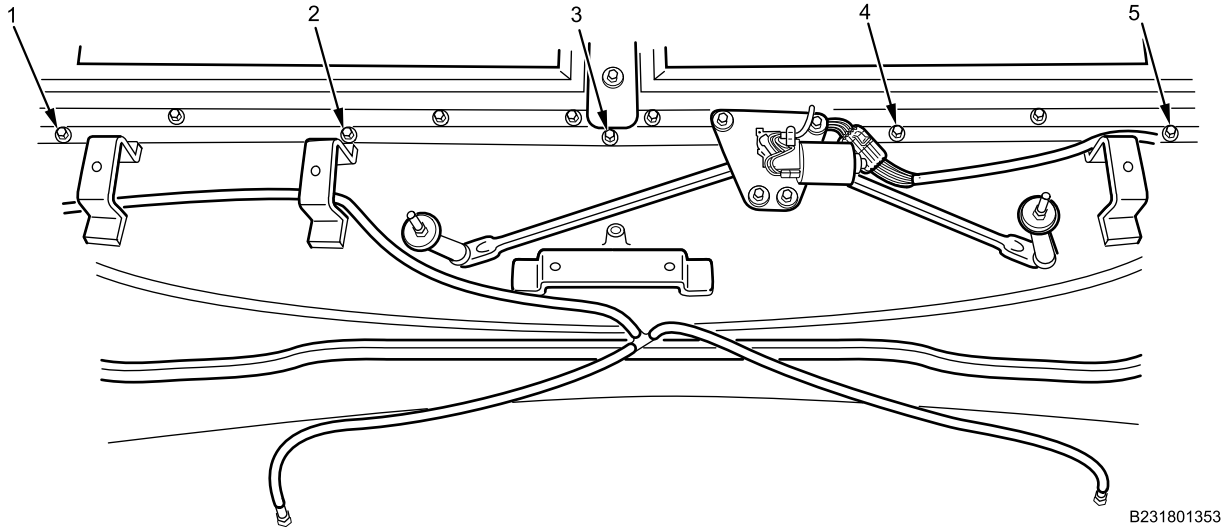

Figure 6. Cross-Vehicle Equipment Bracket Bolt Exterior Locations.

2. Identify locations and install cross-vehicle equipment bracket bolts (Figure 6, Item 1 through 5).
3. Position cross-vehicle equipment bracket on vehicle.
4. Loosely install nut (Figure 7, Item 1) on cross-vehicle equipment bracket bolt (Figure 6, Item 5), using exterior assistant.

CROSS-VEHICLE EQUIPMENT BRACKET REMOVAL AND INSTALLATION - (CONTINUED)

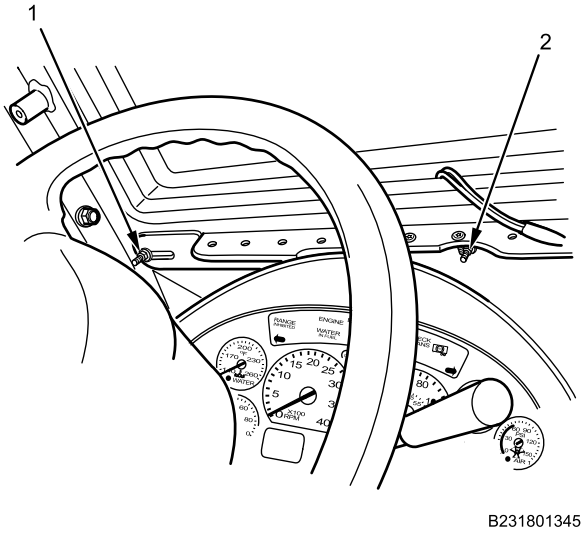

Figure 7. Cross-Vehicle Equipment Bracket Nut Left Side Interior Locations.

5. Loosely install nut (Figure 7, Item 2) on cross-vehicle equipment bracket bolt (Figure 6, Item 4).
6. Loosely install nut (Figure 8, Item 1) on cross-vehicle equipment bracket bolt (Figure 6, Item 3).

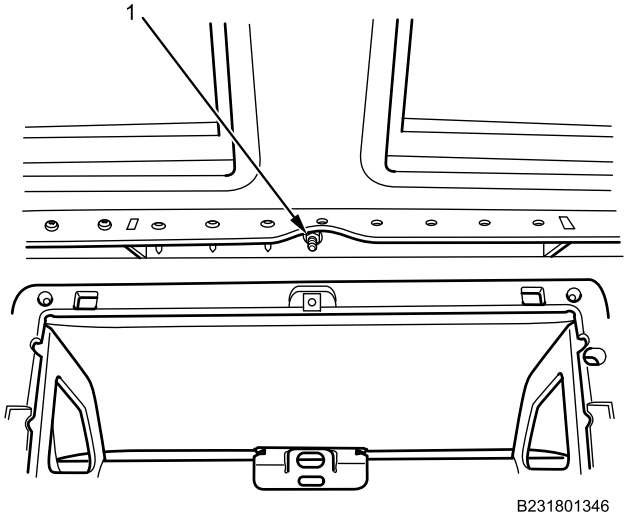

Figure 8. Cross-Vehicle Equipment Bracket Nut Center Interior Location.

CROSS-VEHICLE EQUIPMENT BRACKET REMOVAL AND INSTALLATION - (CONTINUED)

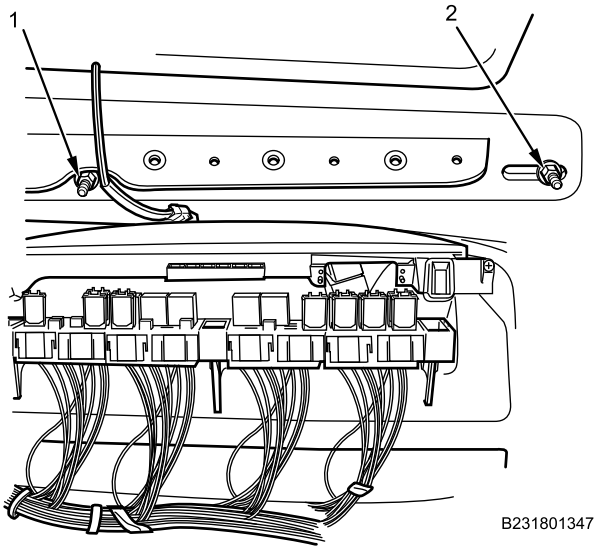

Figure 9. Cross-Vehicle Equipment Bracket Nut Right Side Interior Locations.

7. Loosely install nut (Figure 9, Item 1) on cross-vehicle equipment bracket bolt (Figure 10, Item 2).
8. Loosely install nut (Figure 9, Item 2) on cross-vehicle equipment bracket bolt (Figure 10, Item 1).
9. Torque all cross-vehicle equipment bracket bolts (Figure 10, Item 1, 2, 3, 4, 5) to 22–24 ft-lbs (30-32 N•m) with assistant.

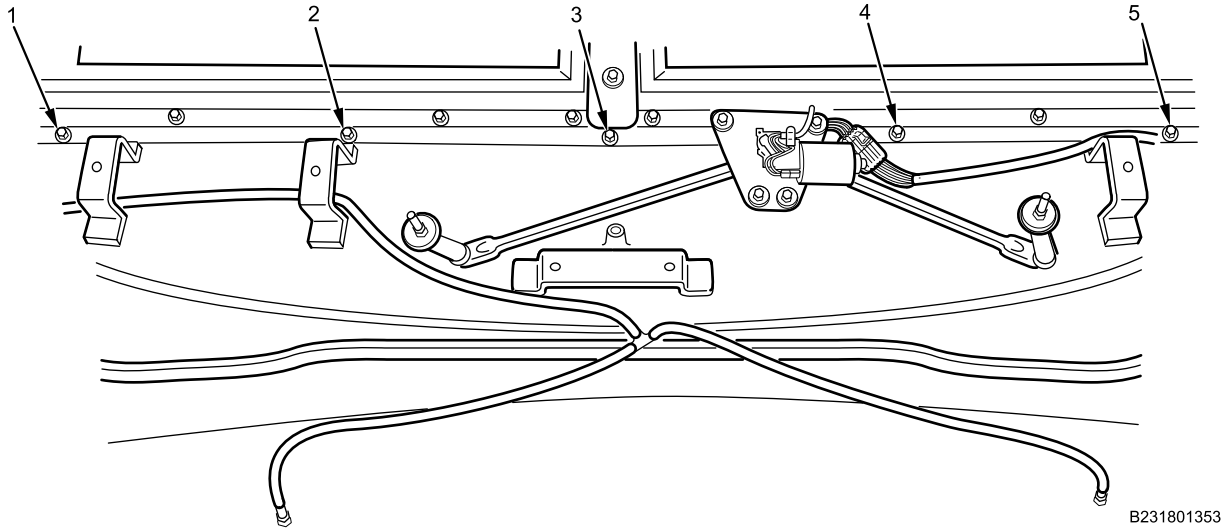

Figure 10. Cross-Vehicle Equipment Bracket Bolt Exterior Locations.

WARNING

Dielectric grease is harmful to skin and eyes. If grease contacts eyes, rinse thoroughly and contact physician if irritation persists. If skin is contacted, wash thoroughly with soap and water. Failure to comply may result in serious injury to personnel.

CROSS-VEHICLE EQUIPMENT BRACKET REMOVAL AND INSTALLATION - (CONTINUED)

10. Apply dielectric grease in electrical connectors (Figure 11, Item 2 and 3).

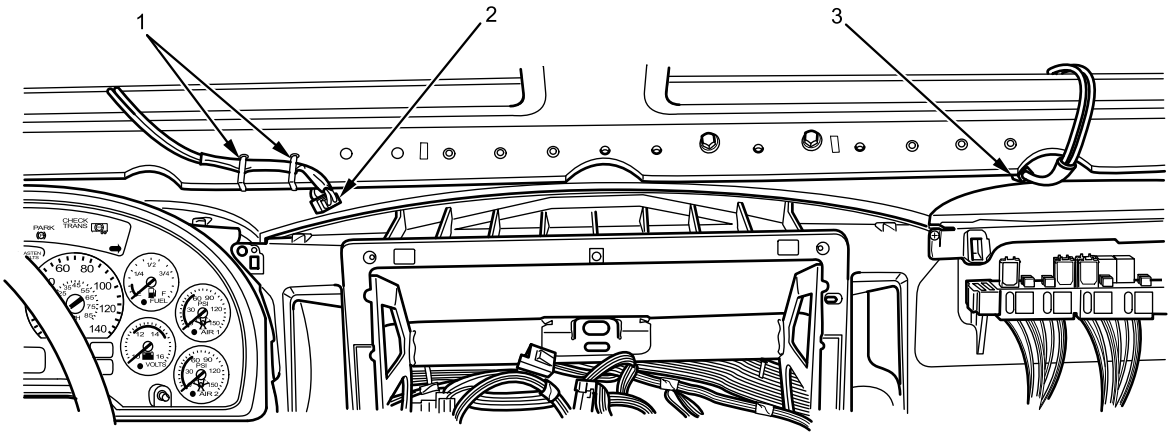

Figure 11. Heated Windshield Harness.

11. Connect heated windshield wiring harness connectors (Figure 11, Item 2 and 3) on instrument panel wiring harness connectors.
12. Install new heated windshield wiring harness cable lock straps (Figure 11, Item 1).

END OF TASK

FOLLOW-ON MAINTENANCE

1. Install instrument panel right side closeout (WP 0580).
2. Install instrument panel center closeout (WP 0579).
3. Install instrument panel cluster closeout (WP 0578).
4. Install A-pillar cover trim panels (WP 0642).
5. Install cowl panel (WP 0683).
6. Connect battery cables (WP 0404).
7. Turn MAIN POWER switch on (TM 9-2355-106-10).
8. Remove wheel chocks (TM 9-2355-106-10).
9. Test-drive vehicle to verify equipment operation (TM 9-2355-106-10).
10. Set transmission in NEUTRAL (N) (TM 9-2355-106-10).
11. Set parking brake (TM 9-2355-106-10).
12. Turn engine off (TM 9-2355-106-10).
13. Turn MAIN POWER switch off (TM 9-2355-106-10).

END OF TASK

END OF WORK PACKAGE

FIELD MAINTENANCE

STEERING COLUMN COVERS REMOVAL AND INSTALLATION

INITIAL SETUP:

Tools and Special Tools
General Mechanic's Tool Kit (GMTK) (WP 0795, Item 37)
Screwdriver, torx, T27, 4-inch (WP 0795, Item 89)

References
TM 9-2355-106-10
TM 9-2355-106-23P
WP 0786
WP 0782

Equipment Condition
Parking brake set (TM 9-2355-106-10)
Transmission set in NEUTRAL (N) (TM 9-2355-106-10)
Engine off (TM 9-2355-106-10)
MAIN POWER switch off (TM 9-2355-106-10)
Wheels chocked (TM 9-2355-106-10)
Battery cables disconnected (WP 0404)

REMOVAL

1. Remove two steering column cover torx screws (Figure 1, Item 1 and 2) from steering column cover lower section.

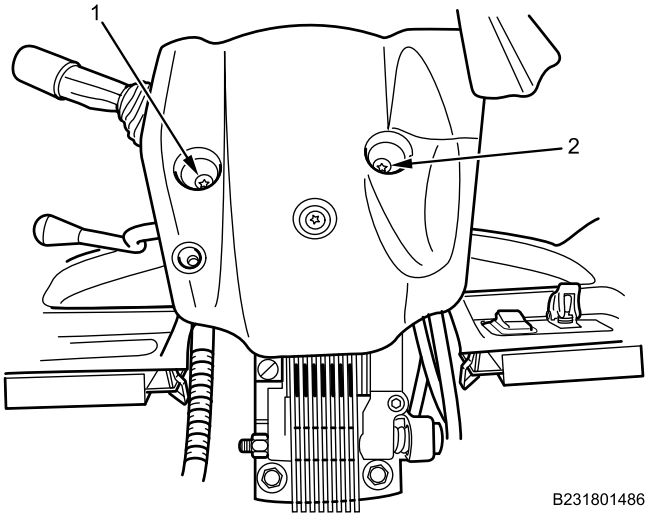

Figure 1. Steering Column Cover Upper Section Screws.

STEERING COLUMN COVERS REMOVAL AND INSTALLATION - (CONTINUED)

2. Remove steering column cover upper section (Figure 2, Item 1) from steering column.

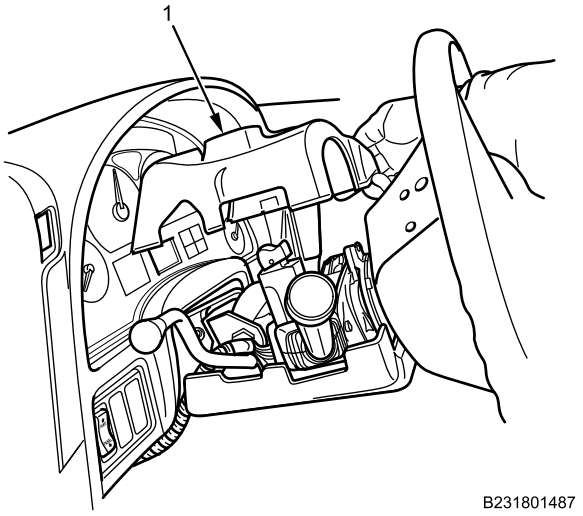

Figure 2. Steering Column Cover Upper Section.

3. Remove steering column cover torx screw (Figure 3, Item 1) from steering column cover lower section.

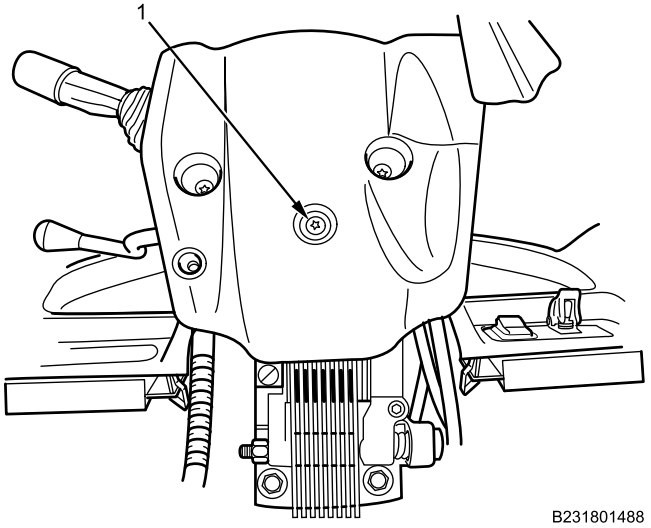

Figure 3. Steering Column Cover Lower Section Screw.

STEERING COLUMN COVERS REMOVAL AND INSTALLATION - (CONTINUED)

4. Disconnect steering wheel wiring harness retainer (Figure 4, Item 1) from steering column cover lower section (Figure 4, Item 2). Remove steering column cover lower section.

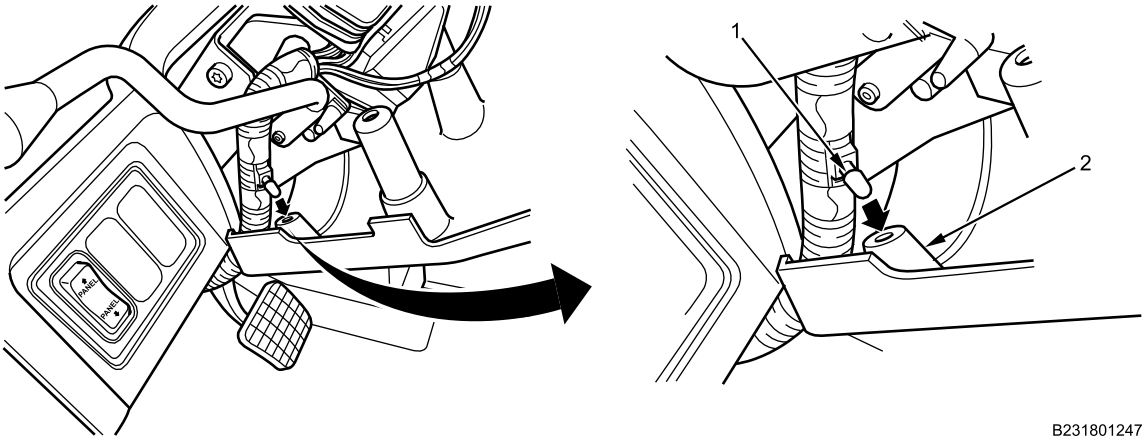

Figure 4. Steering Column Cover Wiring Harness Retainer.

END OF TASK

INSTALLATION

1. Connect steering wheel wiring harness retainer (Figure 5, Item 1) on steering column cover lower section (Figure 5, Item 2).

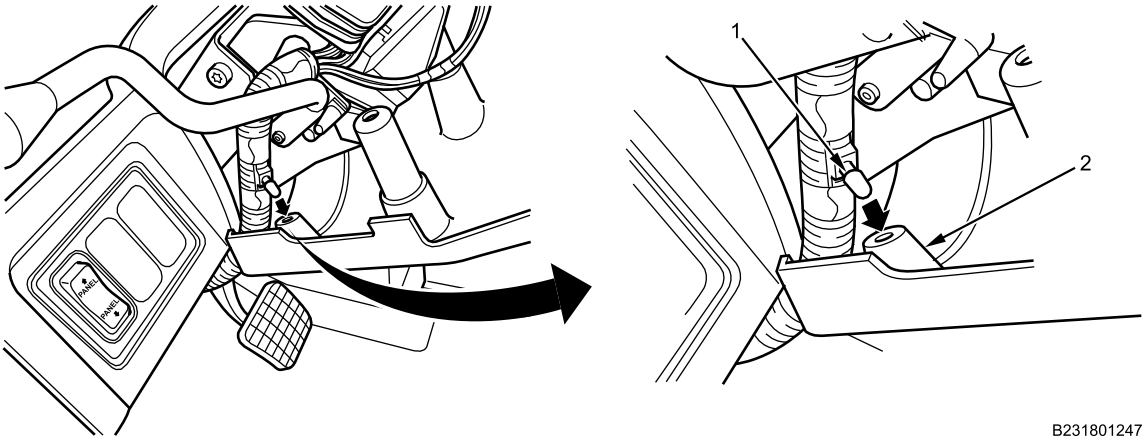

Figure 5. Steering Column Cover Wiring Harness Retainer.

STEERING COLUMN COVERS REMOVAL AND INSTALLATION - (CONTINUED)

2. Place steering column cover lower section on steering column and loosely install torx screw (Figure 6, Item 1).

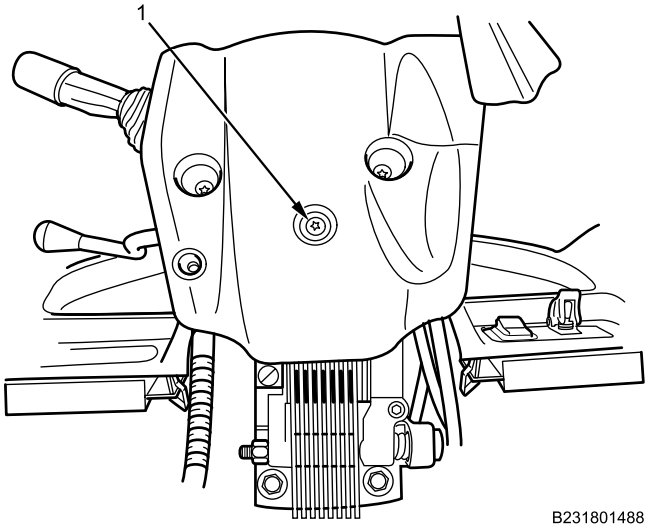

Figure 6. Steering Column Cover Lower Section Screw.

3. Position steering column cover upper section (Figure 7, Item 1) on steering wheel column.

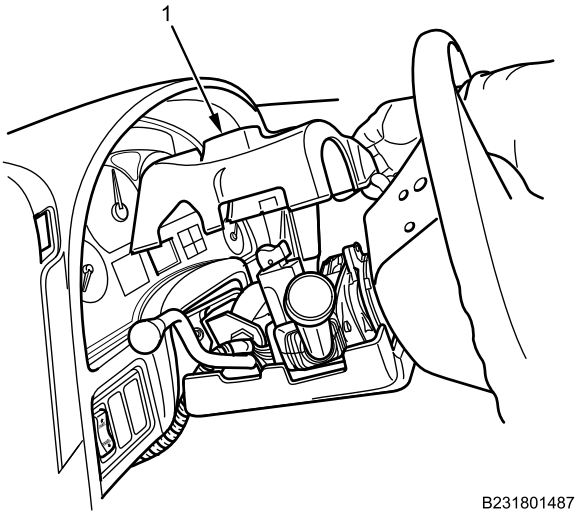

Figure 7. Steering Column Cover Upper Section.

STEERING COLUMN COVERS REMOVAL AND INSTALLATION - (CONTINUED)

4. Loosely install two steering column cover torx screws (Figure 8, Item 1 and 2).

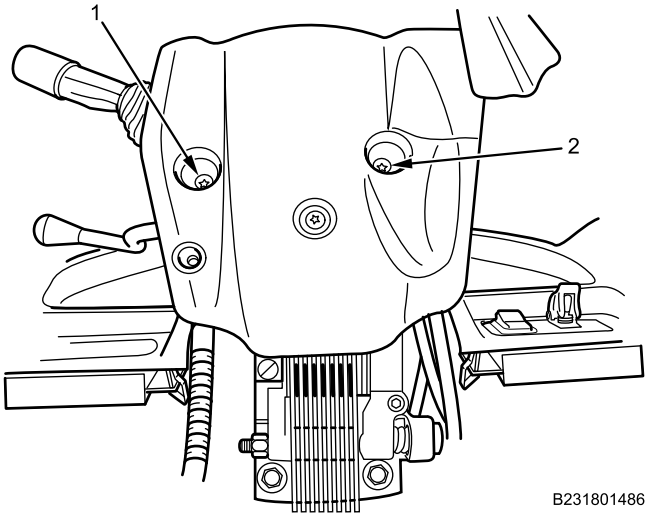

Figure 8. Steering Column Cover Upper Section Screws.

5. Tighten three steering column cover torx screws securely.

END OF TASK

FOLLOW-ON MAINTENANCE

1. Connect batteries (WP 0404).
2. Turn MAIN POWER switch on (TM 9-2355-106-10).
3. Remove wheel chocks (TM 9-2355-106-10).
4. Test-drive vehicle to verify steering column operation (TM 9-2355-106-10).
5. Set transmission in NEUTRAL (N) (TM 9-2355-106-10).
6. Set parking brake (TM 9-2355-106-10).
7. Turn engine off (TM 9-2355-106-10).
8. Turn MAIN POWER switch off (TM 9-2355-106-10).

END OF TASK

END OF WORK PACKAGE

FIELD MAINTENANCE

DRIVER CONTROL MOUNTING (DCM) BRACKET ASSEMBLY REMOVAL AND INSTALLATION

INITIAL SETUP:

Tools and Special Tools
General Mechanic's Tool Kit (GMTK) (WP 0795, Item 37)

Materials/Parts
Compound (WP 0794, Item 13)
Goggles, industrial (WP 0794, Item 20)
Face shield, industrial (WP 0794, Item 16)
Gloves (WP 0794, Item 18)

References
TM 9-2355-106-10
TM 9-2355-106-23P
WP 0782

Equipment Condition
Vehicle parking brake set (TM 9-2355-106-10)
Transmission set in NEUTRAL (N) (TM 9-2355-106-10)
Engine off (TM 9-2355-106-10)
MAIN POWER switch off (TM 9-2355-106-10)
Wheels chocked (TM 9-2355-106-10)
Battery cables disconnected (WP 0404)
Brake pedal removed (WP 0501)
Upper air line grommet removed (WP 0504)
Left air line grommet removed (WP 0505)
Electronic system controller (ESC) module removed (WP 0353)
DCM interior armor removed (WP 0648)
Accelerator pedal removed (WP 0397)
Steering column removed (WP 0533)
Tractor protection valve removed (WP 0503)
Foot brake valve removed (WP 0502)

REMOVAL

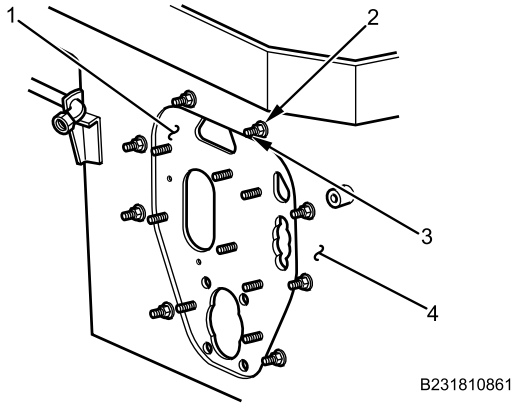

Figure 1. DCM Bracket Assembly.

1. Remove eight nuts (Figure 1, Item 2) from DCM bracket assembly studs (Figure 1, Item 3).
2. Remove DCM bracket assembly (Figure 1, Item 1) from firewall (Figure 1, Item 4).

END OF TASK

DRIVER CONTROL MOUNTING (DCM) BRACKET ASSEMBLY REMOVAL AND INSTALLATION - (CONTINUED)

INSTALLATION

WARNING

Corrosion preventive compound is toxic. Use only in well-ventilated area. Do not get in eyes; wear chemical safety goggles and full-face shield when using. Avoid contact with skin and wear rubber or plastic, solvent-resistant gloves. In case of contact, remove contaminated clothing and immediately wash area with soap and water. If compound contacts eyes, flush eyes with large amounts of water for at least 15 minutes and get immediate medical attention. If swallowed, do not induce vomiting; contact a physician immediately. Failure to comply may result in serious injury or death to personnel.

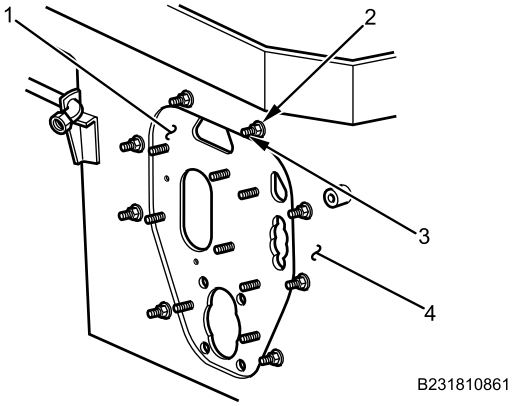

Figure 2. DCM Bracket Assembly.

1. Install DCM bracket assembly (Figure 2, Item 1) on firewall (Figure 2, Item 4).
2. Apply corrosion preventive compound to DCM bracket assembly studs (Figure 2, Item 3).
3. Install eight nuts (Figure 2, Item 2) on DCM bracket assembly studs (Figure 2, Item 3). Tighten nuts securely,

END OF TASK

DRIVER CONTROL MOUNTING (DCM) BRACKET ASSEMBLY REMOVAL AND INSTALLATION - (CONTINUED)

FOLLOW-ON MAINTENANCE

1. Install foot brake valve (WP 0502).
2. Install tractor protection valve (WP 0503).
3. Install steering column (WP 0533).
4. Install accelerator pedal (WP 0397).
5. Install DCM interior armor (WP 0648).
6. Install ESC module (WP 0353).
7. Install left air line grommet (WP 0505).
8. Install upper air line grommet (WP 0504).
9. Install brake pedal (WP 0501).
10. Connect battery cables (WP 0404).
11. Remove wheel chocks (TM 9-2355-106-10).
12. Test-drive vehicle to verify brake system, steering column, engine, and ESC module operation.
13. Set transmission in NEUTRAL (N) (TM 9-2355-106-10).
14. Set vehicle parking brake (TM 9-2355-106-10).
15. Turn engine off (TM 9-2355-106-10).
16. Turn MAIN POWER switch off (TM 9-2355-106-10).

END OF TASK

END OF WORK PACKAGE

FIELD MAINTENANCE

ARMOR GRILLE REMOVAL AND INSTALLATION

INITIAL SETUP:

Tools and Special Tools
General Mechanic's Tool Kit (GMTK) (WP 0795, Item 37)
Lifting sling (WP 0795, Item 68)
Lifting device (WP 0795, Item 67)

Materials/Parts
Compound (WP 0794, Item 13)
Goggles, industrial (WP 0794, Item 20)
Faceshield, industrial (WP 0794, Item 16)
Gloves (WP 0794, Item 19)
Gloves (WP 0794, Item 18)

Personnel Required
Maintainer - (2)

References
TM 9-2355-106-10
TM 9-2355-106-23P
WP 0786
WP 0782

Equipment Condition
Parking brake set (TM 9-2355-106-10)
Transmission set in NEUTRAL (N) (TM 9-2355-106-10)
Engine off (TM 9-2355-106-10)
MAIN POWER switch off (TM 9-2355-106-10)
Wheels chocked (TM 9-2355-106-10)
Engine hood removed (WP 0575)

WARNING

Armor parts are heavy. Use care when removing or installing. Do not attempt to lift without an assistant and lifting device. Wear gloves. Failure to comply may result in serious injury or death to personnel.

ARMOR GRILLE REMOVAL AND INSTALLATION - (CONTINUED)

REMOVAL

1. Secure lifting sling to grille and attach sling to lifting device.

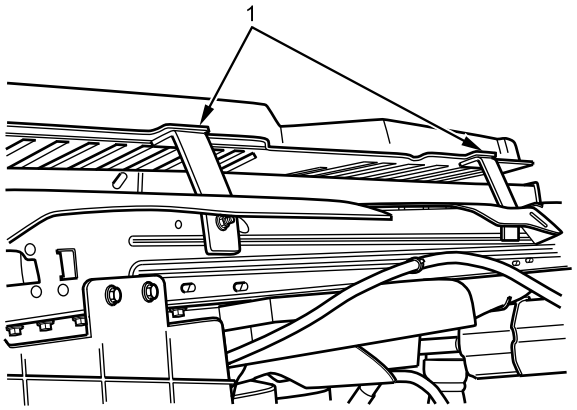

Figure 1. Upper Support Bracket.

2. Remove two bolts (Figure 1, Item 1) from upper support bracket.

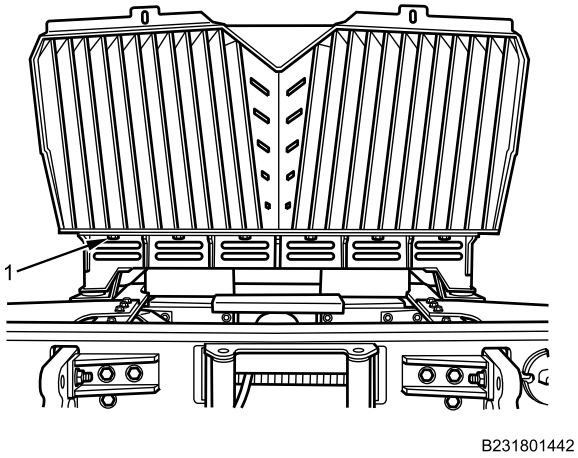

Figure 2. Lower Mounting Bolts.

3. With assistant, take up slack in lifting sling and remove six bolts (Figure 2, Item 1) from armor grille. Remove grille with lifting device.

END OF TASK

ARMOR GRILLE REMOVAL AND INSTALLATION - (CONTINUED)

INSTALLATION

WARNING

Corrosion preventive compound is toxic. Use only in well-ventilated area. Do not get in eyes; wear chemical safety goggles and full-face shield when using. Avoid contact with skin and wear rubber or plastic, solvent-resistant gloves. In case of contact, remove contaminated clothing and immediately wash area with soap and water. If compound contacts eyes, flush eyes with large amounts of water for at least 15 minutes and get immediate medical attention. If swallowed, do not induce vomiting; contact a physician immediately. Failure to comply may result in serious injury or death to personnel.

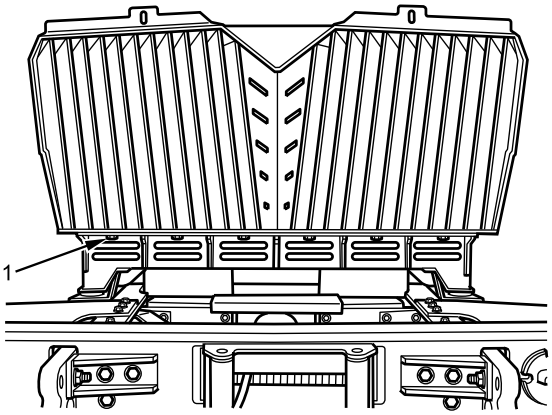

B231801442

Figure 3. Lower Mounting Bolts.

1. Apply corrosion preventive compound on lower bolts (Figure 3, Item 1).
2. With assistant and lifting device, install grille with six bolts (Figure 3, Item 1).

ARMOR GRILLE REMOVAL AND INSTALLATION - (CONTINUED)

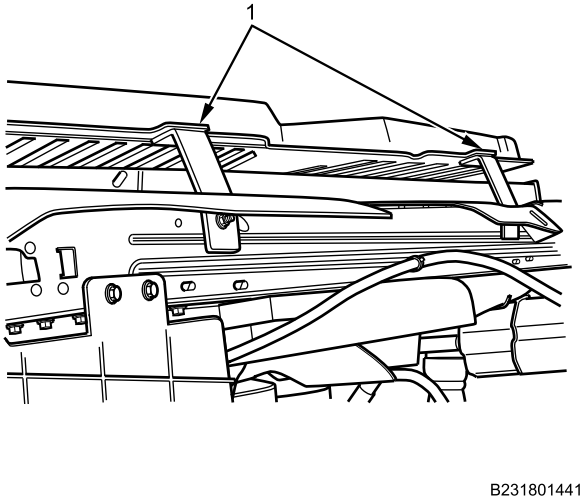

Figure 4. Upper Support Bracket.

3. Apply corrosion preventive compound on upper support bolts (Figure 4, Item 1).
4. Install two bolts (Figure 4, Item 1) on upper support bracket. Tighten bolts securely.
5. Remove sling and lifting device.

END OF TASK

FOLLOW-ON MAINTENANCE

1. Install engine hood (WP 0575).
2. Remove wheel chocks (TM 9-2355-106-10).

END OF TASK

END OF WORK PACKAGE

FIELD MAINTENANCE

ARMOR GRILLE SUPPORT AND ARMOR GRILLE SUPPORT BRACKET REMOVAL AND INSTALLATION

INITIAL SETUP:

Tools and Special Tools
General Mechanic's Tool Kit (GMTK) (WP 0795, Item 37)

References
TM 9-2355-106-10
TM 9-2355-106-23P
WP 0782

Equipment Condition
Parking brake set (TM 9-2355-106-10)
Transmission set in NEUTRAL (N) (TM 9-2355-106-10)
Engine off (TM 9-2355-106-10)
MAIN POWER switch off (TM 9-2355-106-10)
Wheels chocked (TM 9-2355-106-10)
Charge air cooler assembly removed (WP 0263)

REMOVAL

1. Remove two bolts, four washers, four insulators, and two nuts (Figure 1, Item 3) from armor grille support (Figure 1, Item 2).

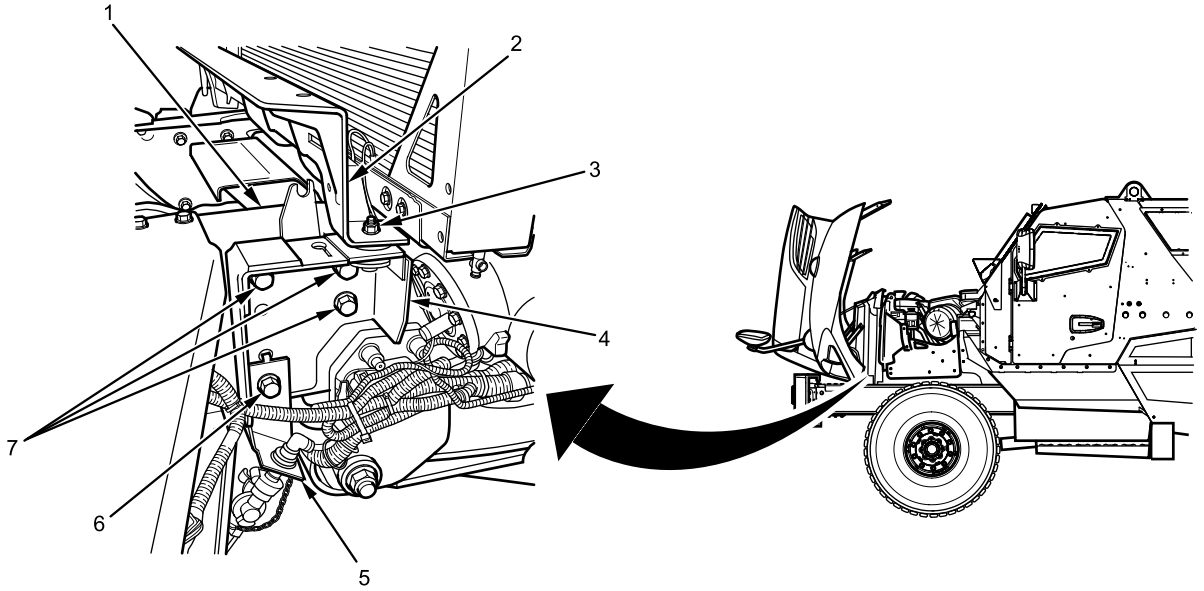

Figure 1. Left Side Armor Grille Support and Bracket; Right Side Similar.

2. Remove armor grille support (Figure 1, Item 2) from armor grille support brackets (Figure 1, Item 4).
3. Remove two bolts (Figure 1, Item 6) and nuts from front gladhand assemblies (Figure 1, Item 5).
4. Remove gladhand assemblies (Figure 1, Item 5) from armor grille support brackets (Figure 1, Item 4).
5. Remove six bolts (Figure 1, Item 7) and nuts from armor grille support brackets (Figure 1, Item 4).
6. Remove armor grille support brackets (Figure 1, Item 4) from frame rails (Figure 1, Item 1).

END OF TASK

ARMOR GRILLE SUPPORT AND ARMOR GRILLE SUPPORT BRACKET REMOVAL AND INSTALLATION - (CONTINUED)

INSTALLATION

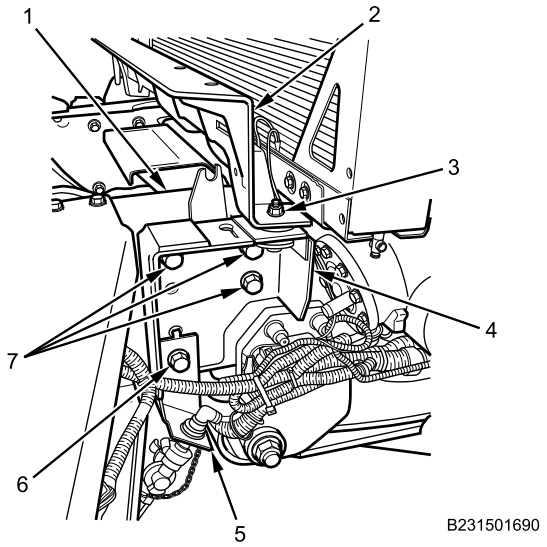

Figure 2. Left Side Armor Grille Support and Bracket; Right Side Similar.

1. Install armor grille support brackets (Figure 2, Item 4) on frame rails (Figure 2, Item 1) with six bolts (Figure 2, Item 7) and nuts. Do not tighten.
2. Install gladhand assemblies (Figure 2, Item 5) on armor grille support brackets (Figure 2, Item 4) with two bolts (Figure 2, Item 6) and nuts and tighten securely.
3. Tighten six bolts (Figure 2, Item 7) securely.
4. Install armor grille support (Figure 2, Item 2) on armor grille support brackets (Figure 2, Item 4) with two bolts, four washers, four insulators, and two nuts (Figure 2, Item 3) and tighten securely.

END OF TASK

FOLLOW-ON MAINTENANCE

1. Install charge air cooler assembly (WP 0263).
2. Remove wheel chocks (TM 9-2355-106-10).

END OF TASK

END OF WORK PACKAGE

FIELD MAINTENANCE

HOOD/FENDER LATCH REMOVAL AND INSTALLATION

INITIAL SETUP:

Tools and Special Tools
General Mechanic's Tool Kit (GMTK) (WP 0795, Item 37)

Materials/Parts
Gloves (WP 0794, Item 18)
Goggles, industrial (WP 0794, Item 20)
Faceshield, industrial (WP 0794, Item 16)
Compound (WP 0794, Item 13)

References
TM 9-2355-106-10
TM 9-2355-106-23P
WP 0786
WP 0782

Equipment Condition
Parking brake set (TM 9-2355-106-10)
Transmission set in NEUTRAL (N) (TM 9-2355-106-10)
Engine off (TM 9-2355-106-10)
MAIN POWER switch off (TM 9-2355-106-10)
Wheels chocked (TM 9-2355-106-10)
Engine hood open and secured (TM 9-2355-106-10)

NOTE

Left side shown; right side similar.

REMOVAL

WARNING

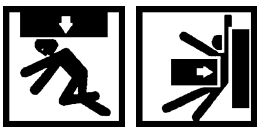

Engine hood is extremely heavy and requires two-person lift. Ensure that there is adequate space in front of the vehicle to open hood completely without pinning or pinching personnel between hood and any other structure. Use extreme care when working under hood and make sure it is properly supported. Failure to comply may result in serious injury or death to personnel.

1. Remove two bolts (Figure 1, Item 3) and hood latch (Figure 1, Item 2) from hood (Figure 1, Item 1).

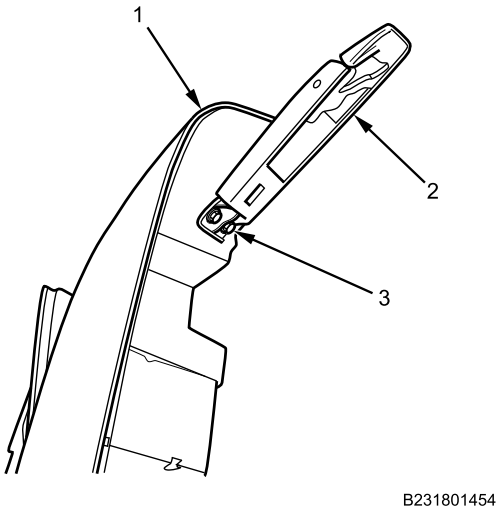

Figure 1. Hood and Latch.

HOOD/FENDER LATCH REMOVAL AND INSTALLATION - (CONTINUED)

2. Remove bolt (Figure 2, Item 3) and latch (Figure 2, Item 2) from fender (Figure 2, Item 1).

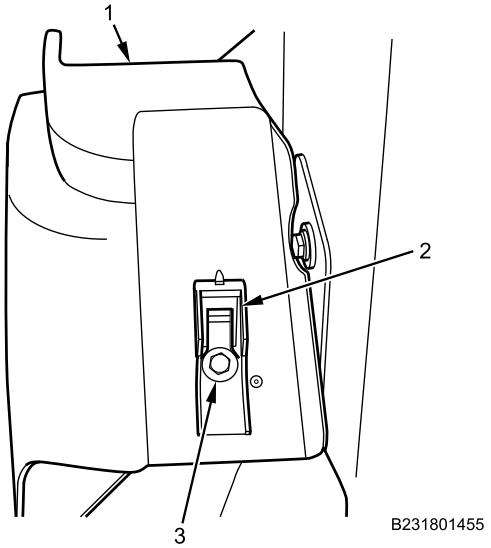

Figure 2. Fender and Latch.

END OF TASK

INSTALLATION

WARNING

Corrosion preventive compound is toxic. Use only in well-ventilated area. Do not get in eyes; wear chemical safety goggles and full-face shield when using. Avoid contact with skin and wear rubber or plastic, solvent-resistant gloves. In case of contact, remove contaminated clothing and immediately wash area with soap and water. If compound contacts eyes, flush eyes with large amounts of water for at least 15 minutes and get immediate medical attention. If swallowed, do not induce vomiting; contact a physician immediately. Failure to comply may result in serious injury or death to personnel.

HOOD/FENDER LATCH REMOVAL AND INSTALLATION - (CONTINUED)

1. Apply corrosion preventive compound on hood/fender latch bolt threads.

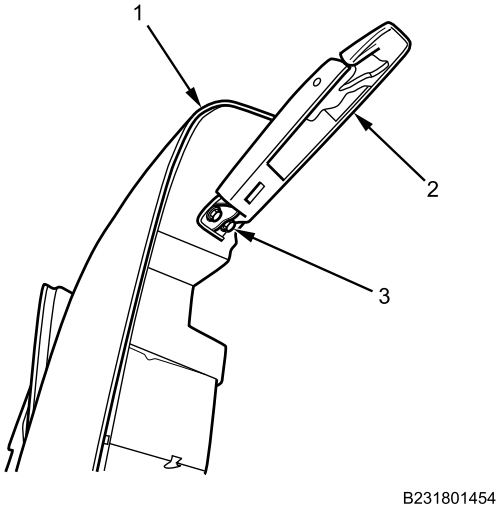

Figure 3. Hood and Latch.

2. Install hood latch (Figure 3, Item 2) on hood (Figure 3, Item 1) with two bolts (Figure 3, Item 3). Tighten securely.
3. Install fender latch (Figure 4, Item 2) on fender (Figure 4, Item 1) with bolt (Figure 4, Item 3). Tighten securely.

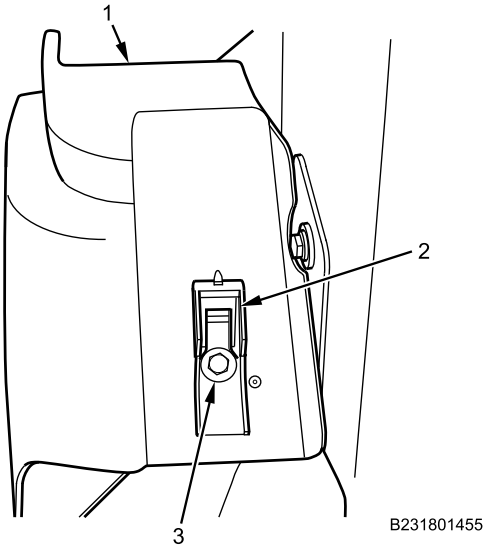

Figure 4. Fender and Latch.

END OF TASK

HOOD/FENDER LATCH REMOVAL AND INSTALLATION - (CONTINUED)

FOLLOW-ON MAINTENANCE

1. Close hood and secure (TM 9-2355-106-10).
2. Remove wheel chocks (TM 9-2355-106-10).

END OF TASK

END OF WORK PACKAGE

FIELD MAINTENANCE

HOOD HINGE ASSEMBLY REMOVAL AND INSTALLATION

INITIAL SETUP:

Tools and Special Tools
General Mechanic's Tool Kit (GMTK) (WP 0795, Item 37)
Wrench, torque, 20-100 lb-ft, 3/8-inch drive (WP 0795, Item 141)

Materials/Parts
Compound (WP 0794, Item 13)
Faceshield, industrial (WP 0794, Item 16)
Gloves (WP 0794, Item 18)
Gloves (WP 0794, Item 19)
Goggles, industrial (WP 0794, Item 20)

Personnel Required
Maintainers - (2)

References
TM 9-2355-106-10
TM 9-2355-106-23P
WP 0782

Equipment Condition
Parking brake set (TM 9-2355-106-10)
Transmission set in NEUTRAL (N) (TM 9-2355-106-10)
Engine off (TM 9-2355-106-10)
MAIN POWER switch off (TM 9-2355-106-10)
Wheels chocked (TM 9-2355-106-10)
Engine hood unlatched (TM 9-2355-106-10)

WARNING

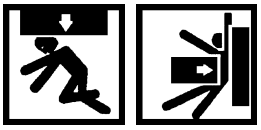

Engine hood is extremely heavy and requires two-person lift. Ensure that there is adequate space in front of the vehicle to open hood completely without pinning or pinching personnel between hood and any other structure. Use extreme care when working under hood and make sure it is properly supported. Failure to comply may result in serious injury or death to personnel.

NOTE

Wear leather work gloves when handling hood.

HOOD HINGE ASSEMBLY REMOVAL AND INSTALLATION - (CONTINUED)

REMOVAL

1. With assistant, support hood assembly (Figure 1, Item 1).

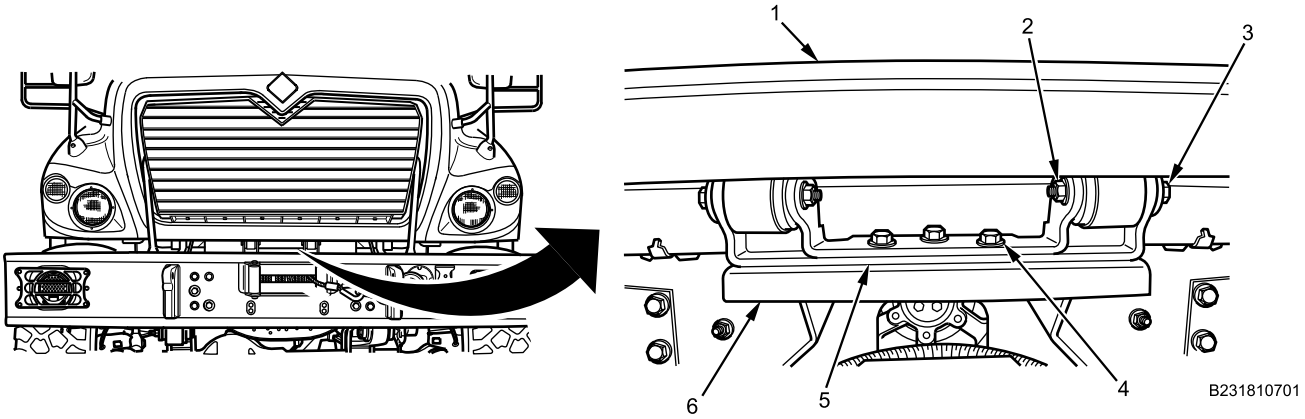

Figure 1. Hood Hinge Assembly.

2. Remove two nuts (Figure 1, Item 2) and two bolts (Figure 1, Item 3) from hood hinge assembly (Figure 1, Item 5).
3. Remove three nuts and three bolts (Figure 1, Item 4) from hood hinge assembly (Figure 1, Item 5).
4. Remove hood hinge assembly (Figure 1, Item 5) from hood hinge mounting bracket (Figure 1, Item 6).

END OF TASK

INSTALLATION

WARNING

Corrosion preventive compound is toxic. Use only in well-ventilated area. Do not get in eyes; wear chemical safety goggles and full-face shield when using. Avoid contact with skin and wear rubber or plastic, solvent-resistant gloves. In case of contact, remove contaminated clothing and immediately wash area with soap and water. If compound contacts eyes, flush eyes with large amounts of water for at least 15 minutes and get immediate medical attention. If swallowed, do not induce vomiting; contact a physician immediately. Failure to comply may result in serious injury or death to personnel.

1. Apply corrosion preventive compound on all hood hinge assembly bolt threads.

HOOD HINGE ASSEMBLY REMOVAL AND INSTALLATION - (CONTINUED)

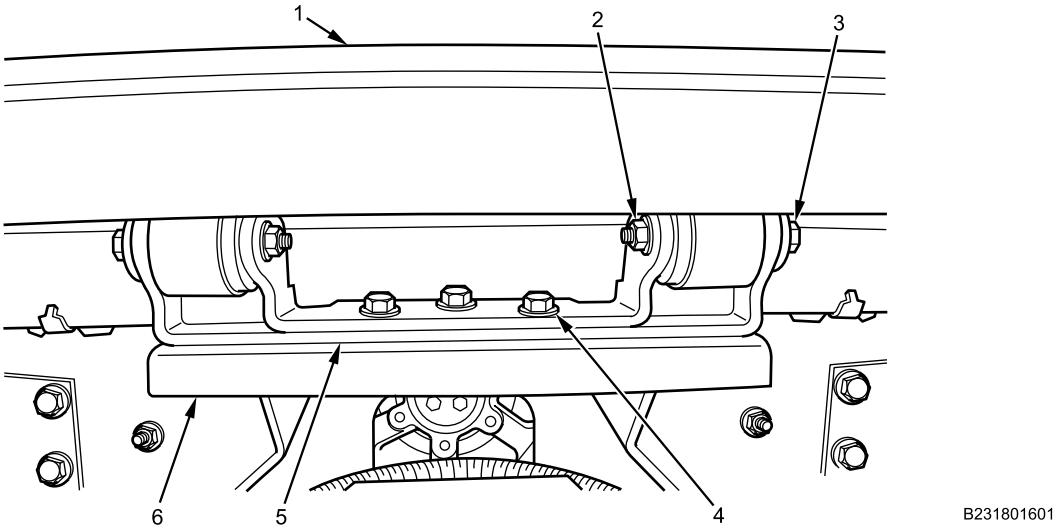

Figure 2. Hood Hinge Assembly.

2. With assistant, support hood assembly (Figure 2, Item 1).
3. Install hood hinge assembly (Figure 2, Item 5) on hood mounting bracket (Figure 2, Item 6) and loosely install three bolts (Figure 2, Item 4) and three nuts.
4. Align hood hinge assembly and torque to 55 lb-ft (75 N•m).
5. Install hood assembly (Figure 2, Item 1) on hood hinge assembly (Figure 2, Item 5) with two bolts (Figure 2, Item 3) and two nuts (Figure 2, Item 2). Torque to 55 lb-ft (75 N•m).

END OF TASK

FOLLOW-ON MAINTENANCE

1. Close and secure engine hood (TM 9-2355-106-10).
2. Remove wheel chocks (TM 9-2355-106-10).

END OF TASK

END OF WORK PACKAGE

FIELD MAINTENANCE

HOOD GRILLE AIR INTAKE REMOVAL AND INSTALLATION

INITIAL SETUP:

Tools and Special Tools
General Mechanic's Tool Kit (GMTK) (WP 0795, Item 37)
Attachment, screwdriver, torx bit, 1/4-inch drive, T20 (WP 0795, Item 8)

References
TM 9-2355-106-10
TM 9-2355-106-23P
WP 0786
WP 0782

Equipment Condition
Parking brake set (TM 9-2355-106-10)
Transmission set in NEUTRAL (N) (TM 9-2355-106-10)
Engine off (TM 9-2355-106-10)
MAIN POWER switch off (TM 9-2355-106-10)
Wheels chocked (TM 9-2355-106-10)

REMOVAL

NOTE

Left side shown; right side similar.

1. Remove two torx T20 screws (Figure 1, Item 3) and hood air intake grille (Figure 1, Item 2) from hood assembly (Figure 1, Item 1).

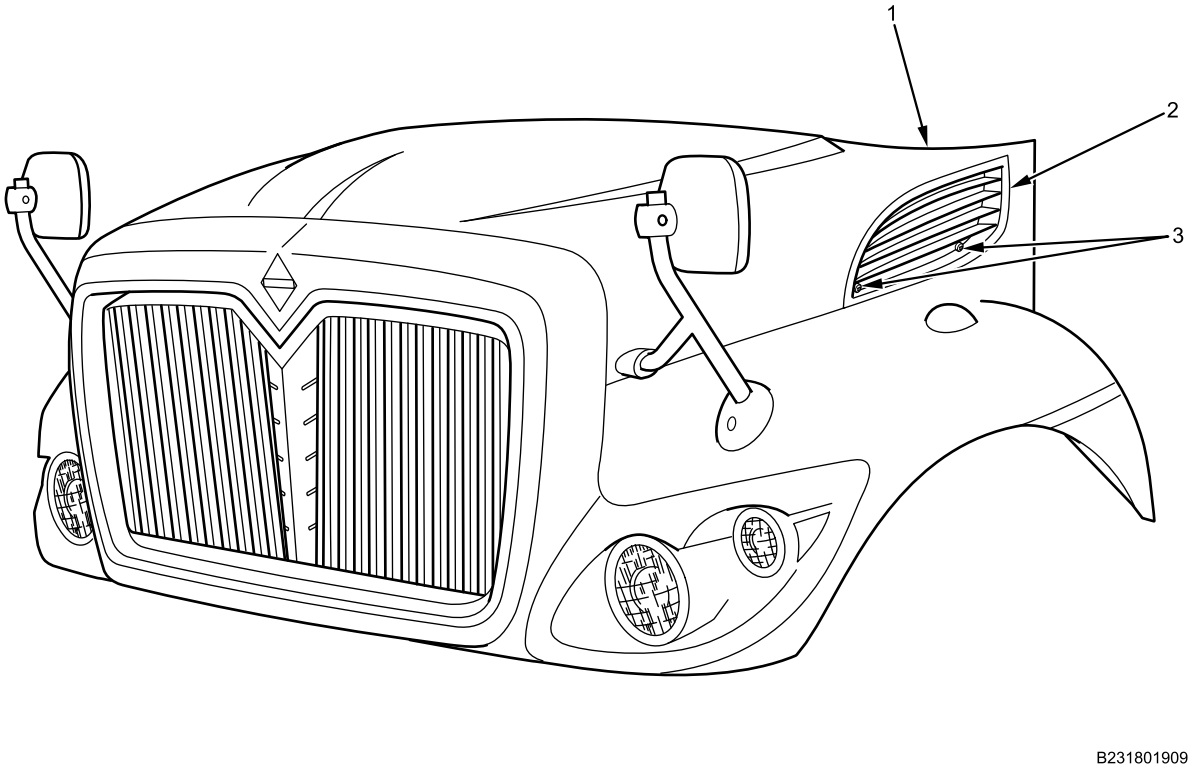

Figure 1. Hood Grille.

END OF TASK

HOOD GRILLE AIR INTAKE REMOVAL AND INSTALLATION - (CONTINUED)

INSTALLATION

1. Install hood air intake grille (Figure 2, Item 2) on hood assembly (Figure 2, Item 1) with two torx T20 screws (Figure 2, Item 3). Tighten screws securely.

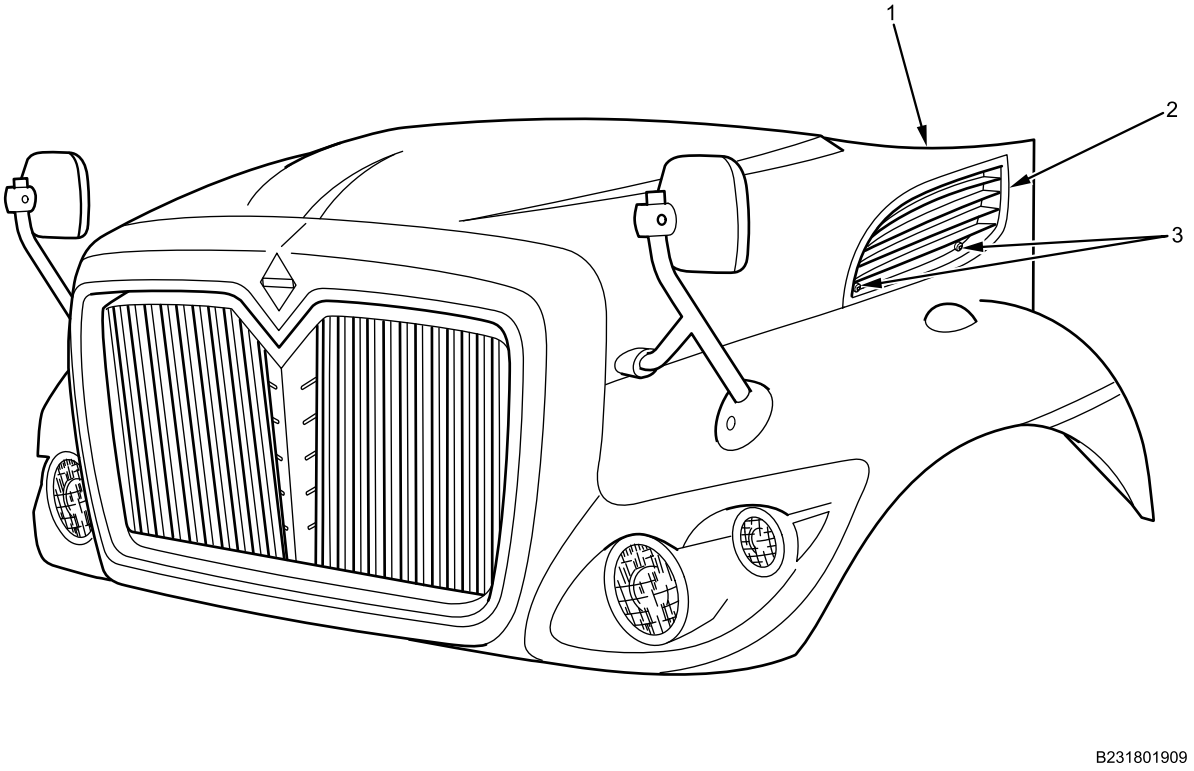

Figure 2. Hood Grille.

END OF TASK

FOLLOW-ON MAINTENANCE

1. Remove wheel chocks (TM 9-2355-106-10).

END OF TASK

END OF WORK PACKAGE

FIELD MAINTENANCE

HOOD GRILLE SURROUND ASSEMBLY REMOVAL AND INSTALLATION

INITIAL SETUP:

Tools and Special Tools
General Mechanic's Tool Kit (GMTK) (WP 0795, Item 37)

Materials/Parts
Clip, spring - (9) (WP 0796, Item 137)

References
TM 9-2355-106-10
TM 9-2355-106-23P
WP 0786
WP 0782

Equipment Condition
Parking brake set (TM 9-2355-106-10)
Transmission set in NEUTRAL (N) (TM 9-2355-106-10)
Engine off (TM 9-2355-106-10)
MAIN POWER switch off (TM 9-2355-106-10)
Wheels chocked (TM 9-2355-106-10)
Headlight assembly removed (WP 0376)

REMOVAL

NOTE

Perform next step for left and right sides. Right side shown; left side similar.

1. Remove two bolts (Figure 1, Item 1) and grille support (Figure 1, Item 3) from armor grille (Figure 1, Item 2) and bumper (Figure 1, Item 4).

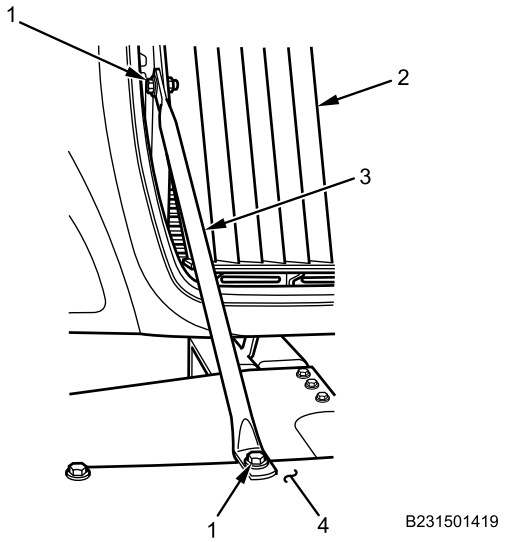

Figure 1. Grille Support Removal.

HOOD GRILLE SURROUND ASSEMBLY REMOVAL AND INSTALLATION - (CONTINUED)

NOTE

Hood grille surround assembly is held in with nine spring clips.

2. Apply outward pressure to grille surround assembly (Figure 2, Item 2) to release spring clips and remove from hood assembly (Figure 2, Item 1). Discard spring clips.

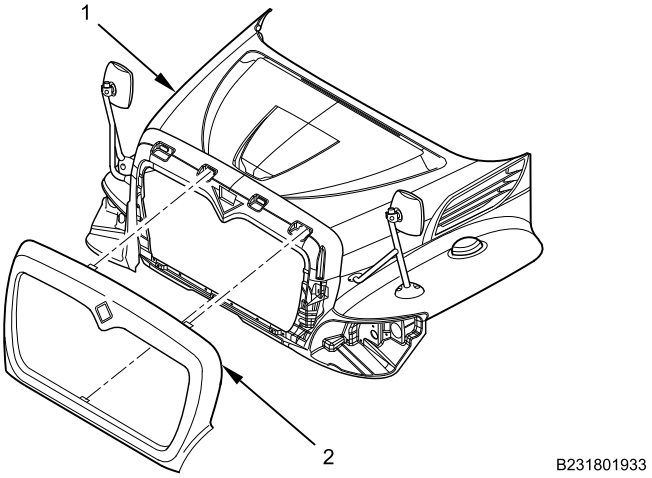

Figure 2. Hood Grille Surround Assembly.

END OF TASK

INSTALLATION

1. Install new spring clips on surround (Figure 3, Item 2).

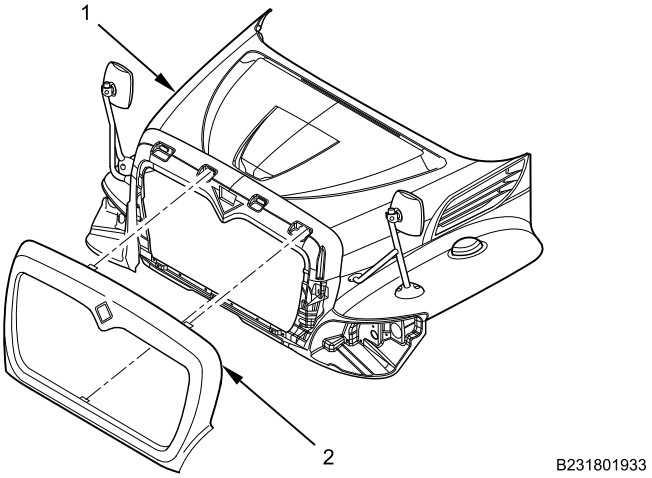

Figure 3. Hood Grille Surround Assembly.

2. Position hood grille surround assembly (Figure 3, Item 2) on hood assembly (Figure 3, Item 1) and snap in place.

HOOD GRILLE SURROUND ASSEMBLY REMOVAL AND INSTALLATION - (CONTINUED)

NOTE

Perform next step for left and right sides. Right side shown; left side similar.

3. Install grille support (Figure 4, Item 3) with two bolts (Figure 4, Item 1) on armor grille (Figure 4, Item 2) and bumper (Figure 4, Item 4). Tighten bolts securely.

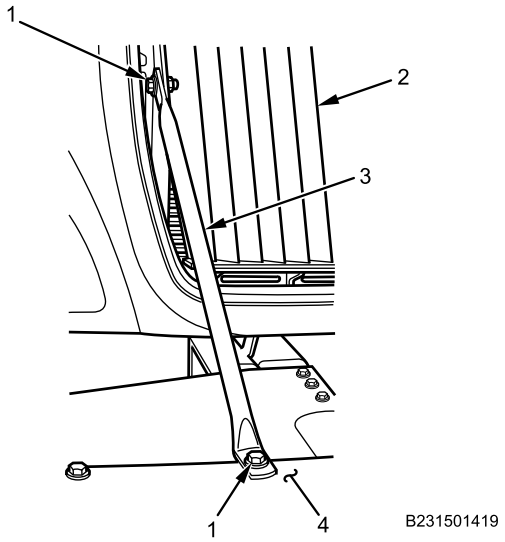

Figure 4. Grille Support Installation.

END OF TASK

FOLLOW-ON MAINTENANCE

1. Install headlight assembly (WP 0376).
2. Remove wheel chocks (TM 9-2355-106-10).

END OF TASK

END OF WORK PACKAGE

FIELD MAINTENANCE

HOOD SAFETY CABLE ASSEMBLY REMOVAL AND INSTALLATION

INITIAL SETUP:

Tools and Special Tools
General Mechanic's Tool Kit (GMTK) (WP 0795, Item 37)

Materials/Parts
Goggles, industrial (WP 0794, Item 20)
Antiseize compound (WP 0794, Item 6)
Cotter pin (WP 0796, Item 18)
Gloves (WP 0794, Item 18)
Gloves (WP 0794, Item 19)

Personnel Required
Maintainer - (2)

References
TM 9-2355-106-10
TM 9-2355-106-23P
WP 0786
WP 0782

Equipment Condition
Parking brake set (TM 9-2355-106-10)
Transmission set in NEUTRAL (N) (TM 9-2355-106-10)
Engine off (TM 9-2355-106-10)
MAIN POWER switch off (TM 9-2355-106-10)
Wheels chocked (TM 9-2355-106-10)
Engine hood open and secured (TM-9-2355-106-10)

WARNING

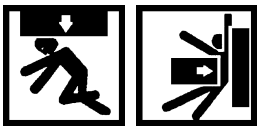

Engine hood is extremely heavy and requires two-person lift. Ensure that there is adequate space in front of the vehicle to open hood completely without pinning or pinching personnel between hood and any other structure. Use extreme care when working under hood and make sure it is properly supported. Failure to comply may result in serious injury or death to personnel.

HOOD SAFETY CABLE ASSEMBLY REMOVAL AND INSTALLATION - (CONTINUED)

NOTE

Wear work gloves when handling hood.

REMOVAL

1. Using assistant, support hood assembly (Figure 1, Item 2).

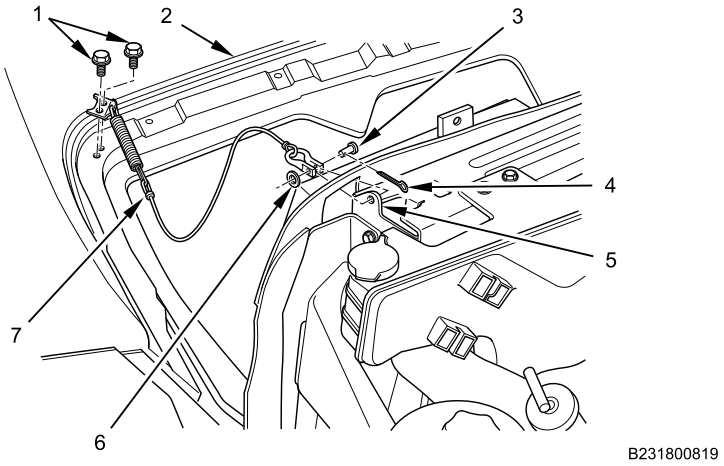

Figure 1. Hood Safety Cable.

NOTE

Left side shown; right side similar.

2. Remove cotter pin (Figure 1, Item 4), washer (Figure 1, Item 6), clevis pin (Figure 1, Item 3), and hood safety cable (Figure 1, Item 7) from radiator support bracket (Figure 1, Item 5). Discard cotter pin (Figure 1, Item 4).
3. Remove two bolts (Figure 1, Item 1) and hood safety cable (Figure 1, Item 7) from hood assembly (Figure 1, Item 2).

END OF TASK

INSTALLATION

WARNING

Antiseize compound can cause skin, eye, and respiratory irritation. Inhalation can cause difficulty breathing, dizziness, headache, and nausea. Wear eye protection and use only with adequate ventilation. Do not use near heat, sparks, or open flame. Wash hands and eyes after using compound. In case of skin contact, wash affected area with soap and water, and seek medical attention if irritation persists. If compound contacts eyes, flush eyes with water for at least 15 minutes, and obtain medical attention if irritation persists. In case of accidental ingestion, do not induce vomiting. Slowly drink 1-2 glasses of water or milk, and seek medical attention. Store compound in a closed container away from heat. Dispose of it in accordance with standard operating procedures. Failure to comply may result in injury to personnel.

HOOD SAFETY CABLE ASSEMBLY REMOVAL AND INSTALLATION - (CONTINUED)

1. Apply antiseize compound on hood safety cable bolt threads (Figure 2, Item 1).

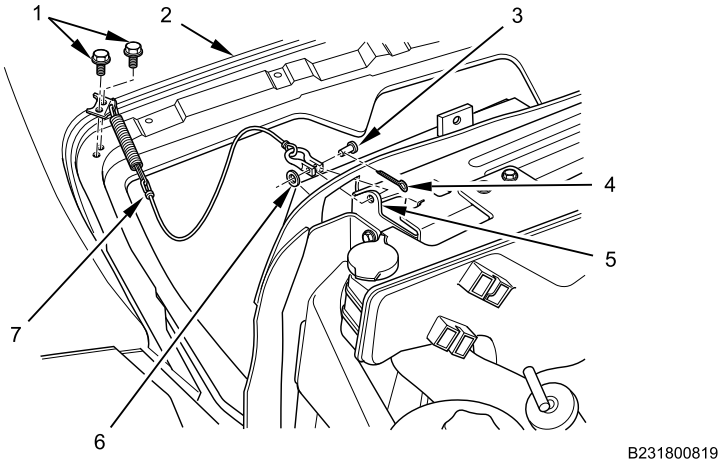

Figure 2. Hood Safety Cable.

2. Install hood safety cable (Figure 2, Item 7) on hood assembly (Figure 2, Item 2) with two bolts (Figure 2, Item 1). Tighten bolts securely.
3. Install hood safety cable (Figure 2, Item 7), clevis pin (Figure 2, Item 3), and washer (Figure 2, Item 6) on radiator support bracket (Figure 2, Item 5) with new cotter pin (Figure 2, Item 4).

END OF TASK

FOLLOW-ON MAINTENANCE

1. Close hood and secure (TM 9-2355-106-10).
2. Remove wheel chocks (TM 9-2355-106-10).

END OF TASK

END OF WORK PACKAGE

FIELD MAINTENANCE

HOOD TORSION ASSIST BAR REMOVAL AND INSTALLATION

INITIAL SETUP:

Tools and Special Tools
General Mechanic's Tool Kit (GMTK) (WP 0795, Item 37)
Gloves, rubber (WP 0795, Item 38)

Materials/Parts
Faceshield, industrial (WP 0794, Item 16)
Goggles, industrial (WP 0794, Item 20)
Gloves (WP 0794, Item 19)
Compound (WP 0794, Item 13)
Clip (WP 0796, Item 106)

Personnel Required
Maintainer - (2)

References
TM 9-2355-106-10
TM 9-2355-106-23P
WP 0786
WP 0782

Equipment Condition
Parking brake set (TM 9-2355-106-10)
Transmission set in NEUTRAL (N) (TM 9-2355-106-10)
Engine off (TM 9-2355-106-10)
MAIN POWER switch off (TM 9-2355-106-10)
Wheels chocked (TM 9-2355-106-10)
Hood open and secured (TM 9-2355-106-10)

WARNING

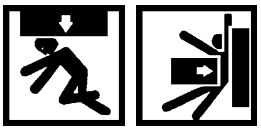

Hood is extremely heavy. Ensure there is adequate space to open hood completely without pinning personnel between hood and another structure. Use extreme care when working under hood and make sure it is properly supported. Failure to comply may result in serious injury or death to personnel.

NOTE

Wear work gloves when handling hood.

Right side shown; left side similar.

HOOD TORSION ASSIST BAR REMOVAL AND INSTALLATION - (CONTINUED)

REMOVAL

1. Using assistant, support hood assembly (Figure 1, Item 1).

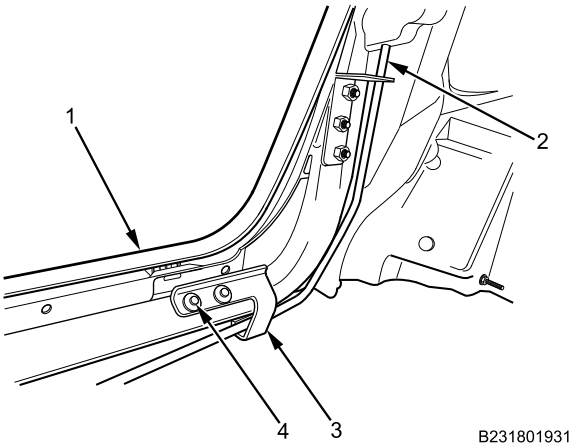

Figure 1. Torsion Bar and Bracket.

2. Remove two bolts (Figure 1, Item 4), bracket (Figure 1, Item 3), and hood torsion assist bar (Figure 1, Item 2) from hood assembly (Figure 1, Item 1).
3. Remove clip (Figure 2, Item 3), washer (Figure 2, Item 2), and hood torsion assist bar (Figure 2, Item 1) from frame slot. Discard clip.

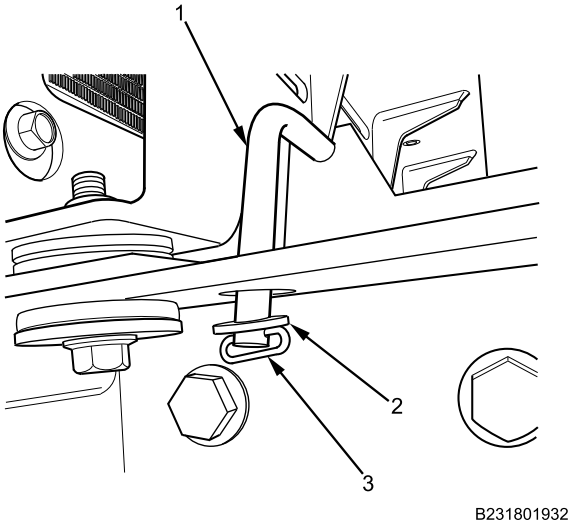

Figure 2. Torsion Bar, Washer, and Clip.

END OF TASK

HOOD TORSION ASSIST BAR REMOVAL AND INSTALLATION - (CONTINUED)

INSTALLATION

1. Install hood torsion assist bar (Figure 3, Item 1) into frame slot with washer (Figure 3, Item 2) and new clip (Figure 3, Item 3).

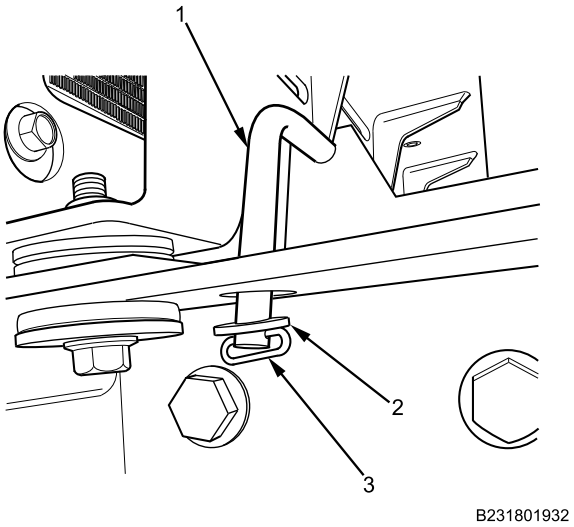

Figure 3. Torsion Bar, Washer, and Clip.

WARNING

Corrosion preventive compound is toxic. Use only in well-ventilated area. Do not get in eyes; wear chemical safety goggles and full-face shield when using. Avoid contact with skin and wear rubber or plastic, solvent-resistant gloves. In case of contact, remove contaminated clothing and immediately wash area with soap and water. If compound contacts eyes, flush eyes with large amounts of water for at least 15 minutes and get immediate medical attention. If swallowed, do not induce vomiting; contact a physician immediately. Failure to comply may result in serious injury or death to personnel.

2. Apply corrosion preventive compound on bolt threads.

HOOD TORSION ASSIST BAR REMOVAL AND INSTALLATION - (CONTINUED)

3. Install hood torsion assist bar (Figure 4, Item 2) and bracket (Figure 4, Item 3) on hood assembly (Figure 4, Item 1) with two bolts (Figure 4, Item 4). Tighten and secure.

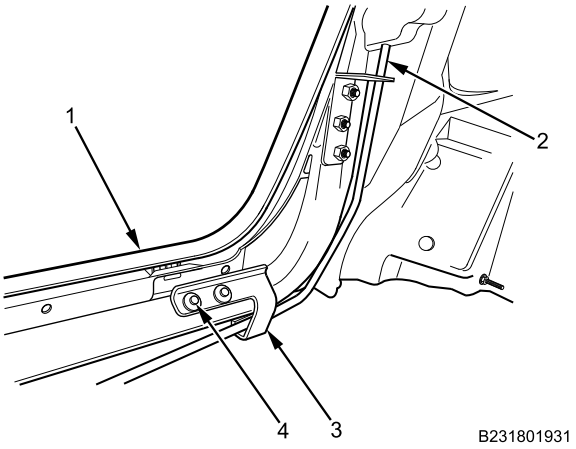

Figure 4. Torsion Bar and Bracket.

END OF TASK

FOLLOW-ON MAINTENANCE

1. Close hood and secure (TM 9-2355-106-10).
2. Remove wheel chocks (TM 9-2355-106-10).

END OF TASK

END OF WORK PACKAGE

FIELD MAINTENANCE

HOOD ASSEMBLY REMOVAL AND INSTALLATION

INITIAL SETUP:

Tools and Special Tools
General Mechanic's Tool Kit (GMTK) (WP 0795, Item 37)
Wrench, torque, 50-250 lb-ft, 1/2-inch drive (WP 0795, Item 143)

Materials/Parts
Goggles, industrial (WP 0794, Item 20)
Faceshield, industrial (WP 0794, Item 16)
Compound (WP 0794, Item 13)
Clip - (2) (WP 0796, Item 106)
Pin, cotter - (2) (WP 0796, Item 18)
Grease (WP 0794, Item 22)
Cable lock strap - (10) (WP 0796, Item 124)
Cable lock strap - (18) (WP 0796, Item 120)
Locknut - (6) (WP 0796, Item 152)
Adhesion promoter (WP 0794, Item 1)
Paper, abrasive (WP 0794, Item 36)
Alcohol, isopropyl (WP 0794, Item 26)
Cloth, cleaning, low-lint (WP 0794, Item 12)
Base, cable lock strap mounting - (19) (WP 0796, Item 150)
Gloves (WP 0794, Item 19)
Gloves (WP 0794, Item 18)

Personnel Required
Maintainer - (3)

References
TM 9-2355-106-10
TM 9-2355-106-23P
WP 0786
WP 0782

Equipment Condition
Parking brake set (TM 9-2355-106-10)
Transmission set in NEUTRAL (N) (TM 9-2355-106-10)
Engine off (TM 9-2355-106-10)
MAIN POWER switch off (TM 9-2355-106-10)
Wheels chocked (TM 9-2355-106-10)
Hood open and secured (TM 9-2355-106-10)
Hood grille surround assembly removed (WP 0572)
Hood assembly air intake grill removed (WP 0571)
Fire suppression system (FSS) disabled (WP 0736)
Front fender light assembly removed (WP 0371)

HOOD ASSEMBLY REMOVAL AND INSTALLATION - (CONTINUED)

WARNING

Prior to servicing Fire Suppression System (FSS), make sure FSS power is off, and FSS is disabled. Failure to comply may result in discharging of system and serious injury or death to personnel.

Cooling system components become extremely hot during normal operation. Allow engine to cool completely prior to working on or near radiator. Use extreme care when working in close quarters in engine compartment. Failure to comply may result in serious injury or death to personnel.

Engine hood is extremely heavy and requires two-person lift. Ensure that there is adequate space in front of the vehicle to open hood completely without pinning or pinching personnel between hood and any other structure. Use extreme care when working under hood and make sure it is properly supported. Failure to comply may result in serious injury or death to personnel.

Use extreme caution when testing or working on or around electrical circuits. Always assume that electrical circuits are live. Electrical shock can occur upon contact with voltage high enough to cause current flow through muscles or nerves. On Direct Current (DC) systems, generally 1 milliamp of current can be felt, 5 milliamps can cause severe pain, 15 milliamps can cause loss of muscle control, and 70 milliamps can be fatal. Wear protective clothing; ensure skin, clothing, and surrounding areas are dry; do not wear jewelry; and touch only the insulated, nonmetallic parts of electrical components and testing equipment. To prevent electrical arcing, avoid shorting electrical test probes and jumper wires. Electrical arcing can cause bright flashes of light, capable of causing temporary blindness. If electrical injury occurs, immediately shut off power supply and seek medical assistance. Failure to comply may result in serious injury or death to personnel.

REMOVAL

NOTE

Remove cable lock straps as necessary to perform procedure. Note position and size of cable lock straps to aid installation.

Perform the following two steps for right and left sides. Right side shown; left side similar.

1. Remove and discard four cable lock straps (Figure 1, Item 1, 3, 4, and 5) from headlamp and turn signal harness (Figure 1, Item 6).

HOOD ASSEMBLY REMOVAL AND INSTALLATION - (CONTINUED)

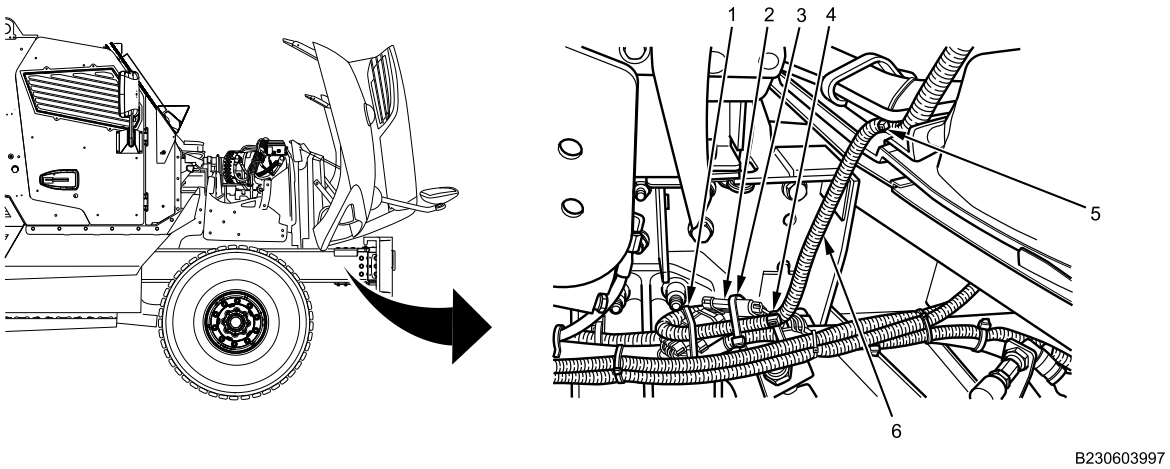

Figure 1. Headlamp and Turn Signal Harness Connector.

2. Disconnect headlamp and turn signal connector (Figure 1, Item 2).
3. Disconnect FSS chassis harness connector (Figure 2, Item 2) from FSS engine sensor (Figure 2, Item 1).

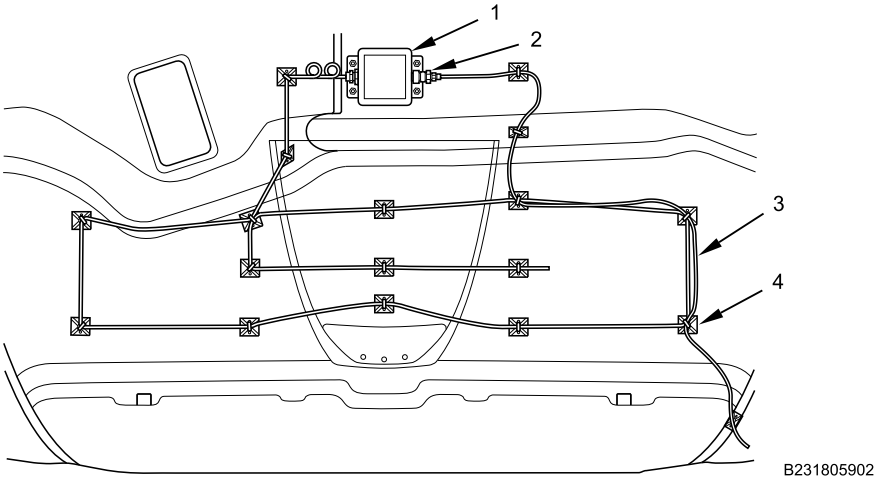

Figure 2. Underside of Hood Assembly.

4. Remove and discard cable lock straps (Figure 2, Item 4) from FSS engine harness (Figure 2, Item 3).

CAUTION

Use work gloves when handling hood. Use care to avoid damaging hood assembly and paint when supporting or removing hood.

NOTE

Perform remaining steps for left and right sides. Left side shown; right side similar.

HOOD ASSEMBLY REMOVAL AND INSTALLATION - (CONTINUED)

5. With two assistants supporting hood assembly (Figure 3, Item 1):
   a. Remove and discard cotter pin (Figure 3, Item 4).
   b. Remove washer (Figure 3, Item 6), clevis pin (Figure 3, Item 3), and hood safety cable (Figure 3, Item 2) from radiator support bracket (Figure 3, Item 5).

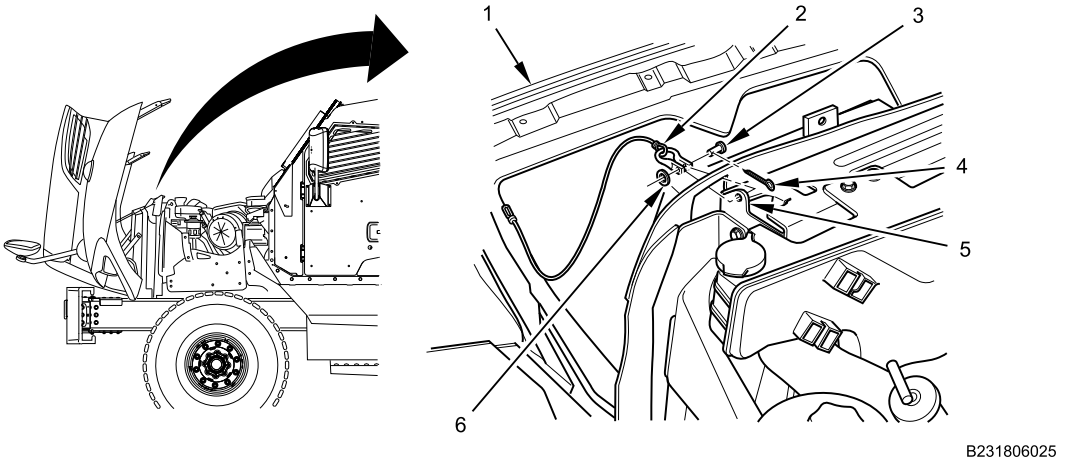

Figure 3. Hood Safety Cable.

NOTE

Right side shown; left side similar.

6. With two assistants supporting hood assembly:
   a. Remove and discard spring clip (Figure 4, Item 3) and washer (Figure 4, Item 2).
   b. Remove torsion assist bar from slot (Figure 4, Item 1).

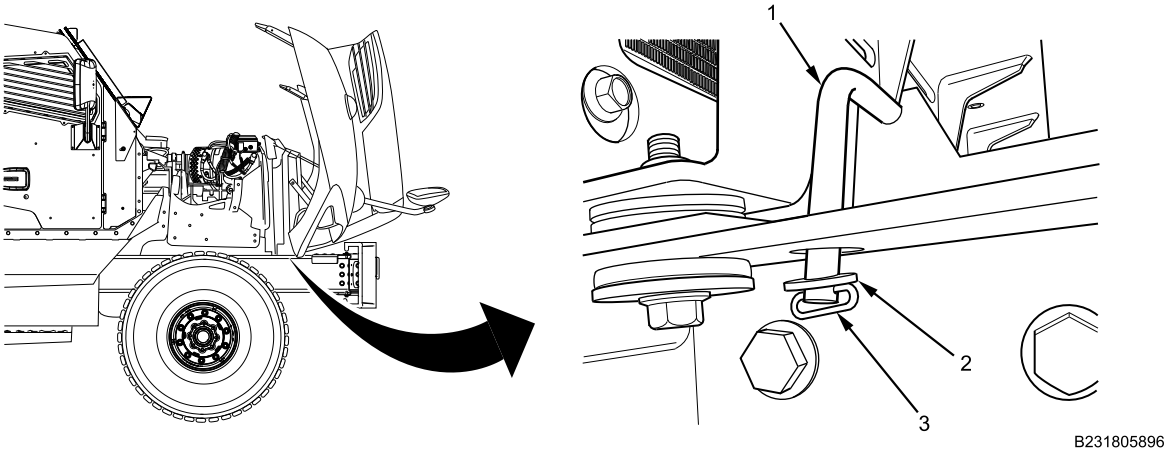

Figure 4. Torsion Assist Bar, Washer, and Spring Clip.

7. Close hood (Figure 5, Item 1).

HOOD ASSEMBLY REMOVAL AND INSTALLATION - (CONTINUED)

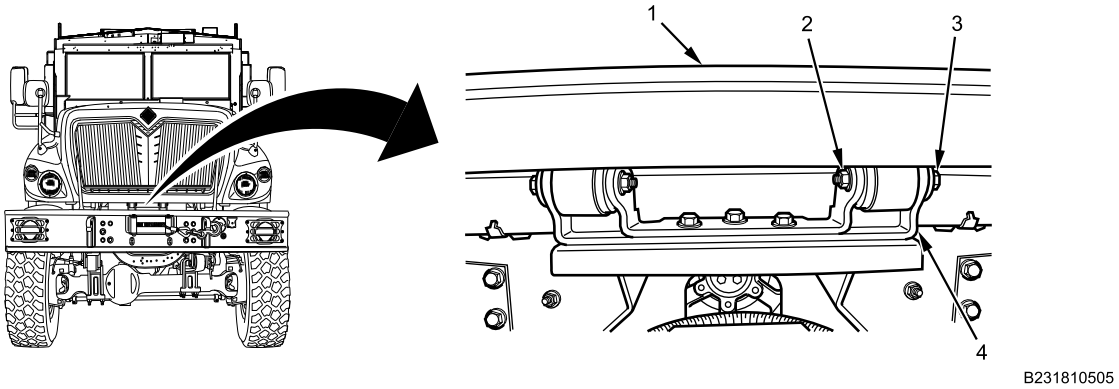

Figure 5. Hood Mounting Hinge.

8. Remove nut (Figure 5, Item 2) and bolt (Figure 5, Item 3) from hood assembly mounting hinge (Figure 5, Item 4).
9. With two assistants, lift and remove hood assembly (Figure 5, Item 1).

END OF TASK

HOOD ASSEMBLY REMOVAL AND INSTALLATION - (CONTINUED)

DISASSEMBLY

CAUTION

Engine hood is extremely heavy and requires two-person lift. Use work gloves when handling hood. Use care to avoid damaging hood assembly and paint when moving hood.

Ensure mirror assembly does not fall out of hood when removing final fastener. Failure to comply may result in damage to mirror assembly.

NOTE

Perform steps 1–10 for left and right sides. Left side shown; right side similar.

Locknuts and washers are located on underside of hood.

1. Remove locknut and washer from small mirror support arm (Figure 6, Item 2). Discard locknut.

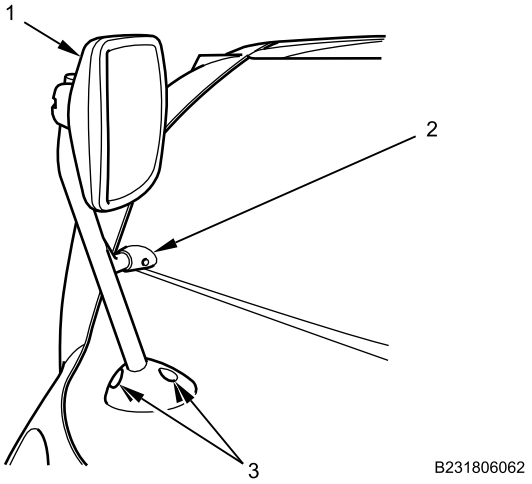

Figure 6. Mirror Assembly.

2. Remove two locknuts, flat washers, bolts (Figure 6, Item 3), and mirror assembly (Figure 6, Item 1). Discard locknuts.

NOTE

Left side shown; right side similar.

3. Remove two bolts (Figure 7, Item 3) and hood/fender latch (Figure 7, Item 2) from hood (Figure 7, Item 1).

HOOD ASSEMBLY REMOVAL AND INSTALLATION - (CONTINUED)

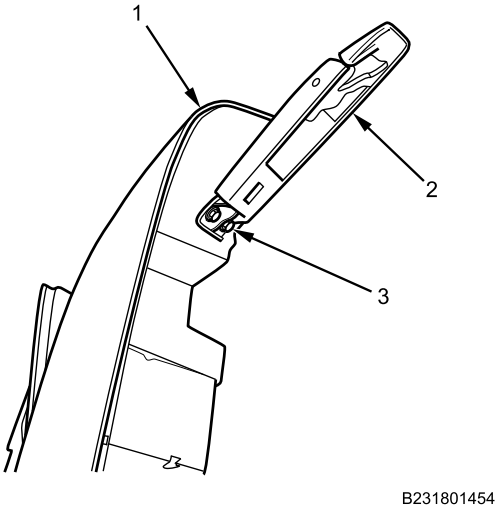

Figure 7. Hood/Fender Latch.

NOTE

Vehicle can have one of two different hood safety cable support mounting configurations. Observe and record orientation of hood safety support to aid with installation.

Left side shown; right side similar.

4. Remove two bolts (Figure 8, Item 2), hood safety support (Figure 8, Item 1 or 5), and hood safety cable (Figure 8, Item 4) from each side of hood (Figure 8, Item 3).

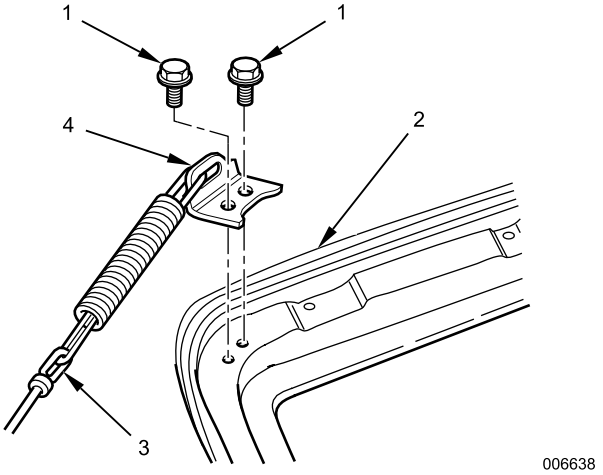

Figure 8. Hood Safety Cable.

NOTE

Right side shown; left side similar.

HOOD ASSEMBLY REMOVAL AND INSTALLATION - (CONTINUED)

5. Release front turn signal and parking light assembly harness (Figure 9, Item 4) from harness clip (Figure 9, Item 5).

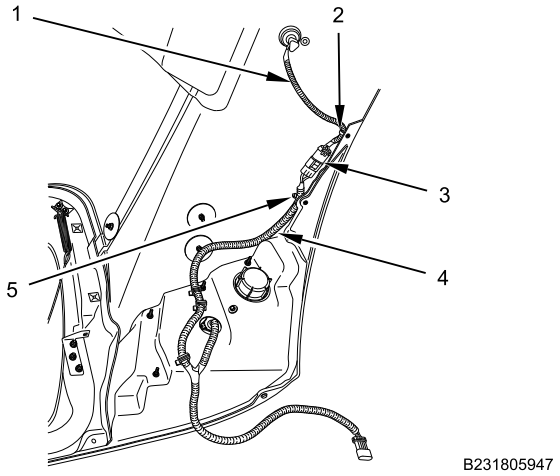

Figure 9. Front Fender Light Harness.

6. Disconnect front headlight harness connector (Figure 9, Item 3).
7. Remove and discard cable lock strap (Figure 9, Item 2), and remove front fender light harness (Figure 9, Item 1).
8. Release front turn signal and parking light assembly harness (Figure 10, Item 6) from remaining three harness clips (Figure 10, Item 1, 2 and 7).

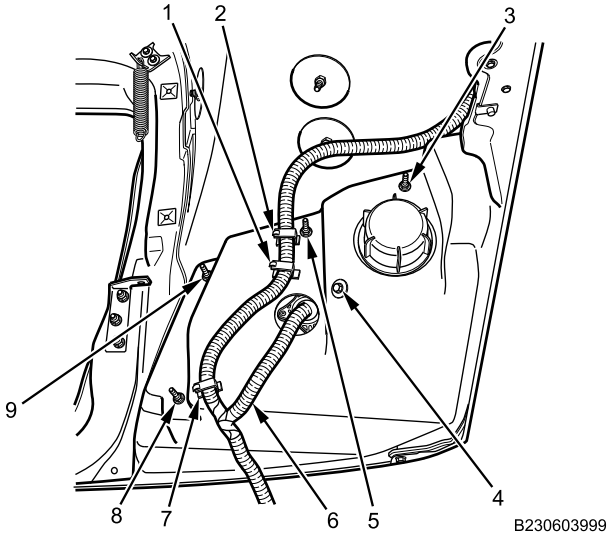

Figure 10. Front Turn Signal and Parking Light Assembly.

CAUTION

Ensure front turn signal and parking light assembly does not fall out of hood when removing final fastener. Failure to comply may result in damage to headlamp housing.

9. Remove four nuts (Figure 10, Item 3, 5, 8 and 9), one bolt (Figure 10, Item 4), front turn signal and parking light assembly, and harness (Figure 10, Item 6).

HOOD ASSEMBLY REMOVAL AND INSTALLATION - (CONTINUED)

NOTE

Right side shown; left side similar.

10. Remove two bolts (Figure 11, Item 4), bracket (Figure 11, Item 3), and hood torsion assist bar (Figure 11, Item 2) from each side of hood (Figure 11, Item 1).

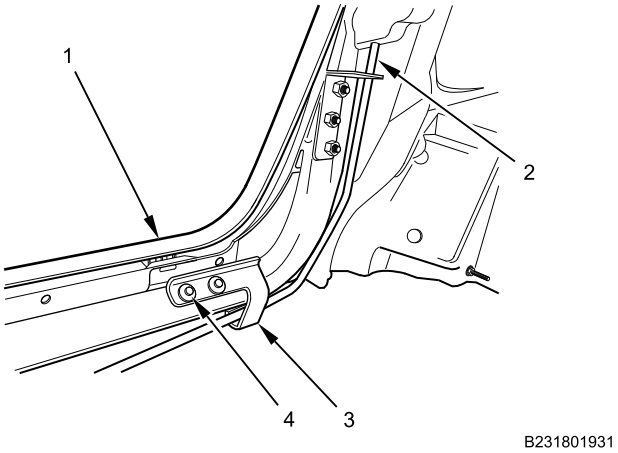

Figure 11. Torsion Assist Bar and Bracket.

11. Remove and discard cable lock straps (Figure 12, Item 5) from FSS engine sensor wire (Figure 12, Item 4).

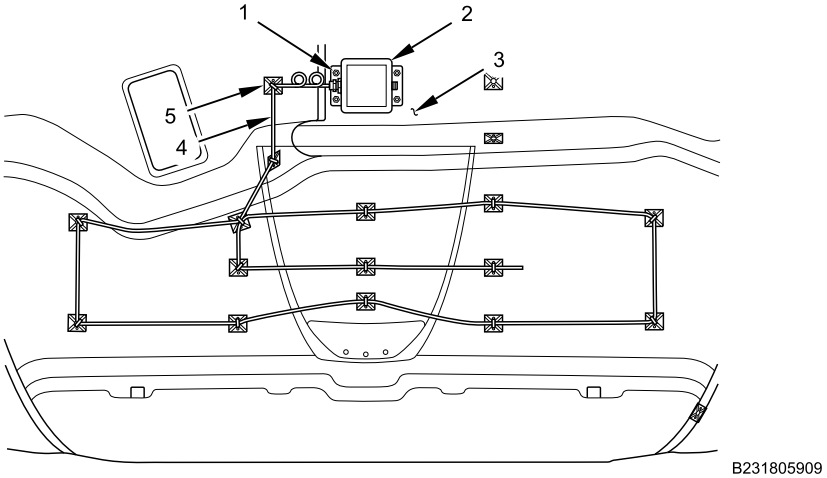

Figure 12. Underside of Hood Assembly.

12. Remove four bolts, nuts (Figure 12, Item 1), and FSS engine sensor (Figure 12, Item 2).

END OF TASK

HOOD ASSEMBLY REMOVAL AND INSTALLATION - (CONTINUED)

ASSEMBLY

WARNING

Adhesives, solvents, and sealing compounds can burn easily, can give off harmful vapors, and are harmful to skin and clothing. Wear goggles and protective clothing. Keep away from open flame and use in well-ventilated area. If adhesive, solvent, or sealing compound get on skin or clothing, wash immediately with soap and water. Failure to comply may result in injury or death to personnel.

Direct contact with fiberglass materials or exposure to airborne fiberglass dust may irritate skin, eyes, nose, and throat. Minimize exposure to fiberglass particles by wearing long sleeves and long pants, work gloves, hat, and face shield, or safety goggles with side shields. Personnel who experience irritation or who have a known sensitivity should wear an approved particulate respirator. After working with fiberglass materials, wash skin with soap and running water and change clothing before touching eyes. Failure to comply may result in injury to personnel.

Vehicles are finished with a chemical agent resistant coating (CARC). CARC contains isocyanates, which are highly irritating to skin and respiratory system. Breathing CARC vapor or dried paint dust can cause coughing, shortness of breath, burning sensation in throat and nose, watering of eyes, pain during respiration, and chest tightness. Skin contact with particulates can cause itching or redness of skin. Sensitivity to isocyanates may increase from repeated exposure. Use the following precautions to prevent injury from exposure. Failure to comply may result in serious injury to personnel.

• Never weld or cut CARC coated surfaces. Grinding or sanding CARC coated surfaces will create harmful dust.

• Personnel who have lung or breathing problems or who have had a reaction to isocyanates must not be in any area where CARC painting operations are performed or CARC dust particles are present.

• CARC painting operations must be performed only by qualified painters wearing protective gear and P-95 or P-100 respirators and working in fully equipped facilities. All personnel in the area must wear high-efficiency air purifying respirators, protective goggles, gloves, and other protective clothing. Thoroughly wash all clothing before reuse.

HOOD ASSEMBLY REMOVAL AND INSTALLATION - (CONTINUED)

• Follow the requirements of TB 43-0242 – CARC Spot Painting, TB MED 502 – Respiratory Protection Program, TG 144 – Guidelines for Controlling Health Hazards in Painting, and associated or equivalent Service-specific requirements and manuals.

Dielectric grease is harmful to skin and eyes. If grease contacts eyes, rinse thoroughly and contact physician if irritation persists. If skin is contacted, wash thoroughly with soap and water. Failure to comply may result in serious injury to personnel.

Corrosion preventive compound is toxic. Use only in well-ventilated area. Do not get in eyes; wear chemical safety goggles and full-face shield when using. Avoid contact with skin and wear rubber or plastic, solvent-resistant gloves. In case of contact, remove contaminated clothing and immediately wash area with soap and water. If compound contacts eyes, flush eyes with large amounts of water for at least 15 minutes and get immediate medical attention. If swallowed, do not induce vomiting; contact a physician immediately. Failure to comply may result in serious injury or death to personnel.

HOOD ASSEMBLY REMOVAL AND INSTALLATION - (CONTINUED)

CAUTION

Engine hood is extremely heavy and requires two-person lift. Use work gloves when handling hood. Use care to avoid damaging hood assembly and paint when moving hood.

NOTE

Apply dielectric grease to all electrical connections.

Apply corrosion preventive compound to all bolt threads.

1. Remove mud and dirt by thoroughly cleaning and drying underside surface of hood.

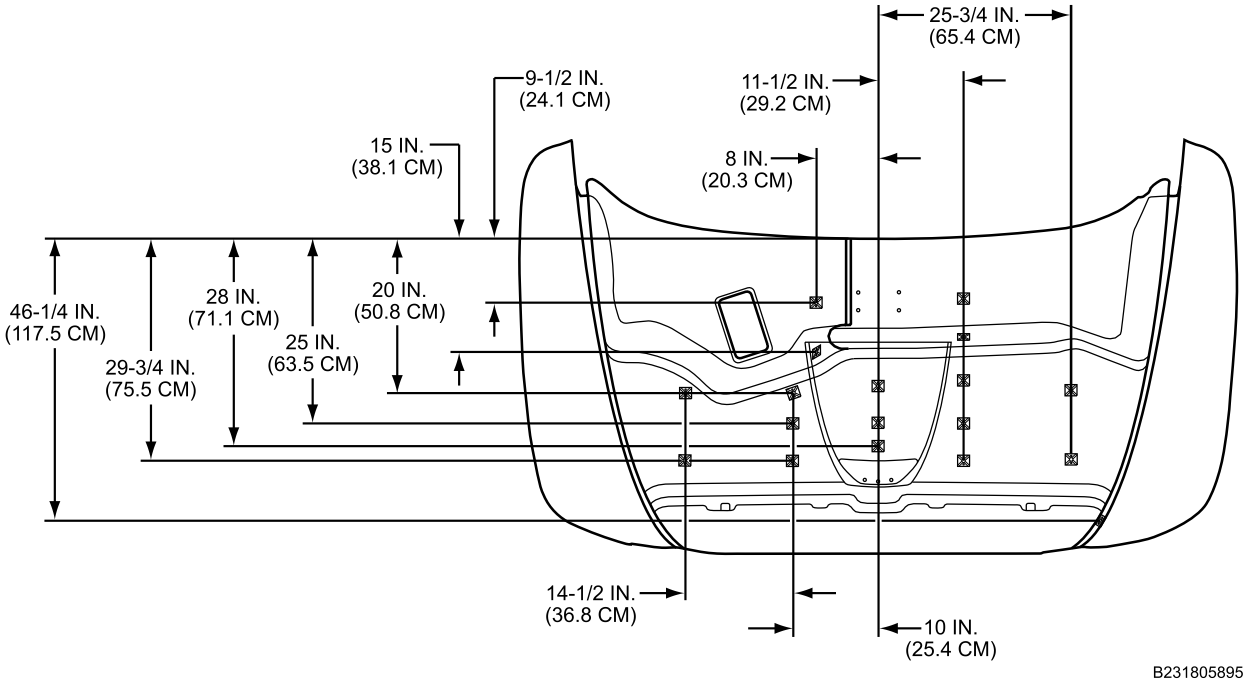

Figure 13. Base Straplock Mounting.

2. Greasy or contaminated surfaces must be cleaned with a 50/50 mixture of isopropyl alcohol and water.
3. Using fine-grit paper, remove CARC paint from each base straplock mounting area.
4. Using a clean cloth, thoroughly remove dust by wiping each base straplock mounting area.
5. Using a lint-free cloth, apply a thin uniform coating of adhesion promoter.
6. Allow adhesion promoter to dry 1–2 minutes before applying base straplock mounting.
7. Applying firm pressure, press base straplock mounting to hood.
8. Install FSS engine sensor (Figure 14, Item 2) on underside of hood (Figure 14, Item 3), with four bolts and new locknuts (Figure 14, Item 1).

HOOD ASSEMBLY REMOVAL AND INSTALLATION - (CONTINUED)

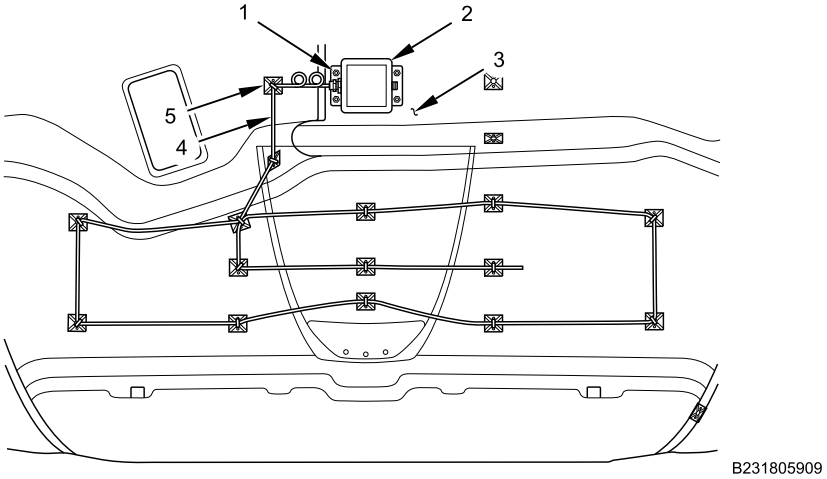

Figure 14. Underside of Hood Assembly.

9. Position FSS engine sensor wire (Figure 14, Item 4) as shown and install new cable lock straps (Figure 14, Item 5).

NOTE

Perform remaining steps for right and left sides. Right side shown; left side similar.

10. Insert hood torsion assist bar (Figure 15, Item 2) in each side of hood (Figure 15, Item 1). Position bracket (Figure 15, Item 3) and install two bolts (Figure 15, Item 4).

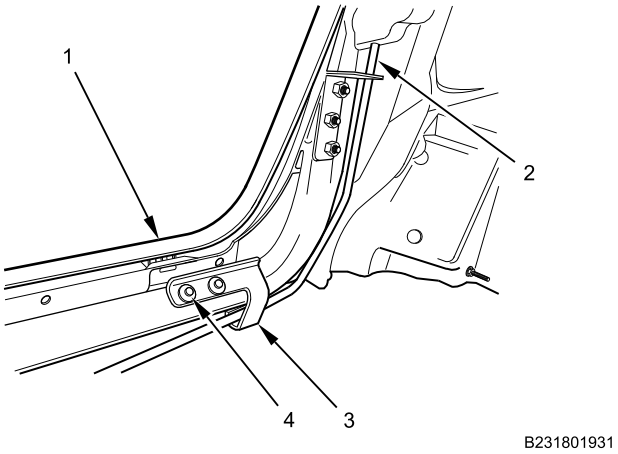

Figure 15. Torsion Assist Bar and Bracket.

CAUTION

Ensure front turn signal and parking light assembly does not fall out of hood before installing fasteners. Failure to comply may result in damage to headlamp housing.

HOOD ASSEMBLY REMOVAL AND INSTALLATION - (CONTINUED)

NOTE

Right side shown; left side similar.

11. Install front turn signal and parking light assembly and harness (Figure 16, Item 6), with four nuts (Figure 16, Item 3, 5, 8 and 9), and one bolt (Figure 16, Item 4).

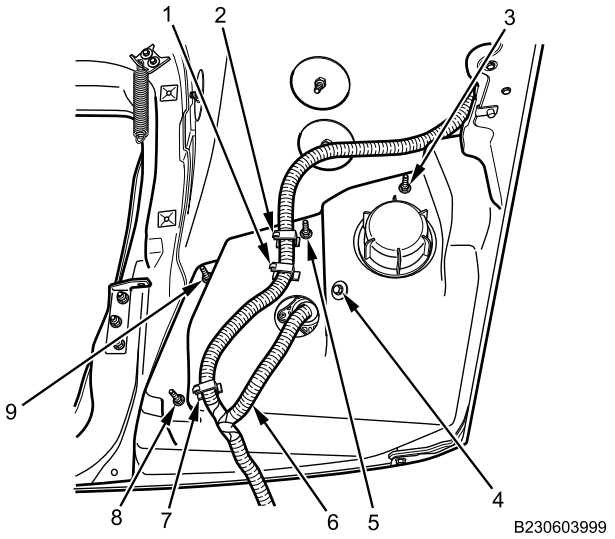

Figure 16. Front Turn Signal and Parking Light Assembly.

12. Secure front turn signal and parking light assembly harness (Figure 16, Item 6) with three harness clips (Figure 16, Item 1, 2 and 7).
13. Connect front fender light harness connector (Figure 17, Item 3).

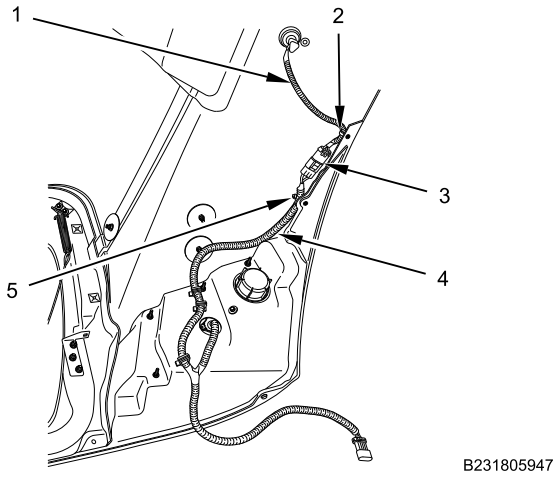

Figure 17. Front Fender Light Harness.

14. Secure front turn signal and parking light assembly harness (Figure 17, Item 4) with harness clip (Figure 17, Item 5).
15. Install new cable lock strap (Figure 17, Item 2) to front fender light harness (Figure 17, Item 1).

HOOD ASSEMBLY REMOVAL AND INSTALLATION - (CONTINUED)

NOTE

Vehicle can have one of two different hood safety cable support mounting configurations. Observe hood safety cable hole in support and install with correct configuration. If replacement is necessary, late production (slotted) hood safety cable support should be installed as shown.

Left side shown; right side similar.

16. Install hood safety cable (Figure 18, Item 4) and support (Figure 18, Item 1 or 5) on hood (Figure 18, Item 3) with two bolts (Figure 18, Item 2).

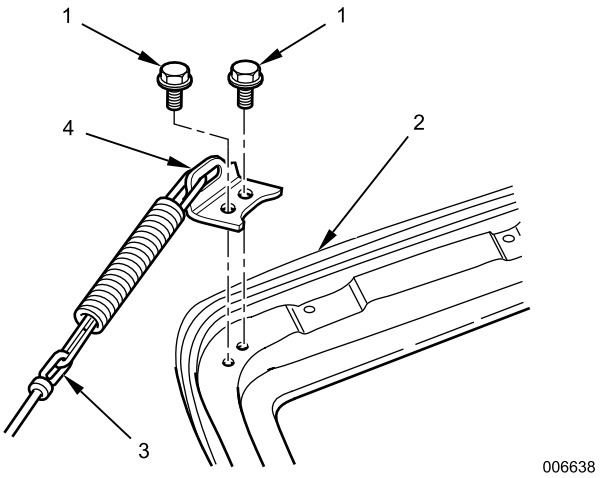

Figure 18. Hood Safety Cable.

HOOD ASSEMBLY REMOVAL AND INSTALLATION - (CONTINUED)

NOTE

Left side shown; right side similar.

17. Install hood/fender latch (Figure 19, Item 2) on hood (Figure 19, Item 1) with two bolts (Figure 19, Item 3).

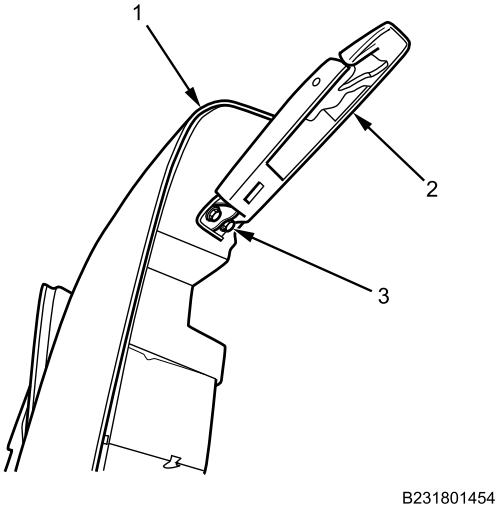

Figure 19. Hood/Fender Latch.

CAUTION

Ensure mirror assembly does not fall out of hood before installing fasteners. Failure to comply may result in damage to mirror assembly.

NOTE

Left side shown; right side similar.

18. Install mirror assembly (Figure 20, Item 1) with two bolts (Figure 20, Item 3), flat washers, and new locknuts on large mirror support arm.

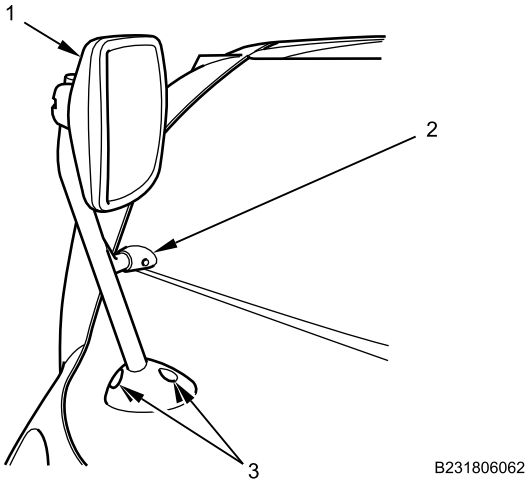

Figure 20. Mirror Assembly.

HOOD ASSEMBLY REMOVAL AND INSTALLATION - (CONTINUED)

19. Install washer and new locknut and on small mirror support arm (Figure 20, Item 2).

END OF TASK

INSTALLATION

WARNING

Corrosion preventive compound is toxic. Use only in well-ventilated area. Do not get in eyes; wear chemical safety goggles and full-face shield when using. Avoid contact with skin and wear rubber or plastic, solvent-resistant gloves. In case of contact, remove contaminated clothing and immediately wash area with soap and water. If compound contacts eyes, flush eyes with large amounts of water for at least 15 minutes and get immediate medical attention. If swallowed, do not induce vomiting; contact a physician immediately. Failure to comply may result in serious injury or death to personnel.

Dielectric grease is harmful to skin and eyes. If grease contacts eyes, rinse thoroughly and contact physician if irritation persists. If skin is contacted, wash thoroughly with soap and water. Failure to comply may result in serious injury to personnel.

Engine hood is extremely heavy and requires two-person lift. Ensure that there is adequate space in front of the vehicle to open hood completely without pinning or pinching personnel between hood and any other structure. Use extreme care when working under hood and make sure it is properly supported. Failure to comply may result in serious injury or death to personnel.

CAUTION

Wear work gloves when handling hood. Use care to avoid damaging hood assembly and paint when installing or supporting hood.

NOTE

Apply dielectric grease to all electrical connections.

Apply corrosion preventive compound to all bolt threads.

HOOD ASSEMBLY REMOVAL AND INSTALLATION - (CONTINUED)

NOTE

Perform steps 1–4 for left and right sides.

1. With two assistants, place hood on vehicle in closed position (Figure 21, Item 1).

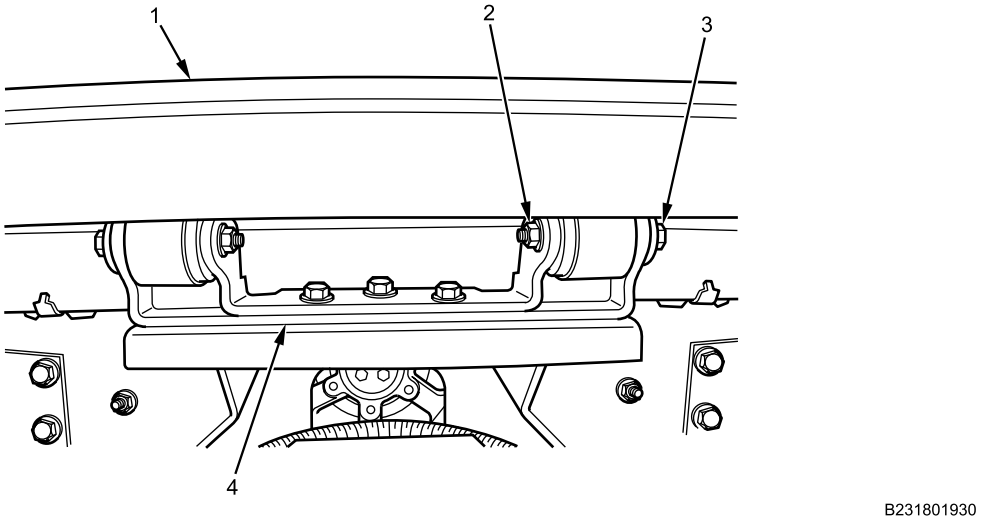

Figure 21. Hood Mounting Hinge.

2. Install bolt (Figure 21, Item 3) and nut (Figure 21, Item 2) to hood mounting hinge (Figure 21, Item 4). Torque to 21-35 lb-ft (29-47 N•m).

NOTE

Right side shown; left side similar.

3. With two assistants, support hood assembly in open position:
   a. Position torsion assist bar in slot.
   b. Install washer (Figure 22, Item 2) and new spring clip (Figure 22, Item 3) to hood torsion assist bar (Figure 22, Item 1).

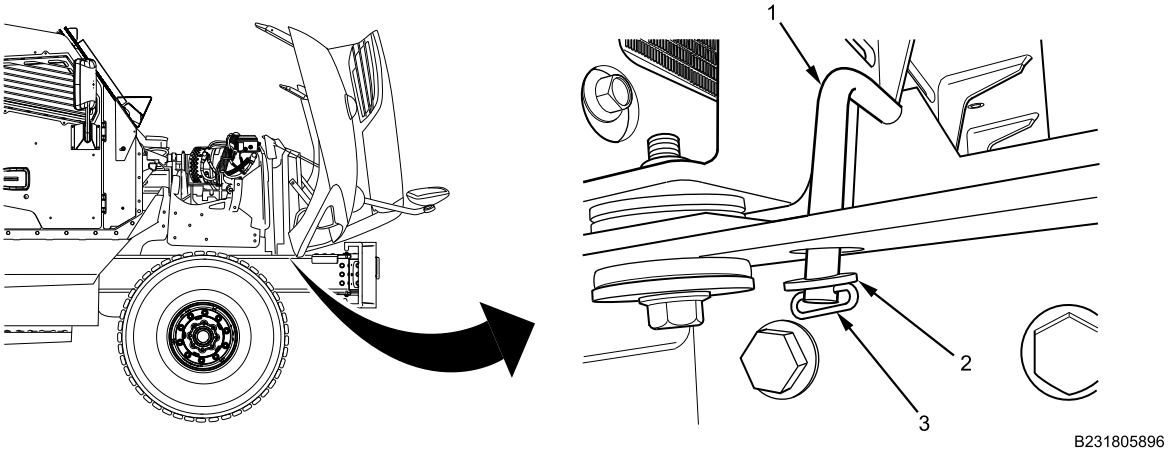

Figure 22. Torsion Assist Bar, Washer, and Spring Clip.

HOOD ASSEMBLY REMOVAL AND INSTALLATION - (CONTINUED)

NOTE

Left side shown; right side similar.

4. With two assistants supporting hood assembly (Figure 23, Item 1):
   a. Position hood safety cable (Figure 23, Item 2) on radiator support bracket (Figure 23, Item 5).
   b. Install clevis pin (Figure 23, Item 3), washer (Figure 23, Item 6), and new cotter pin (Figure 23, Item 4).

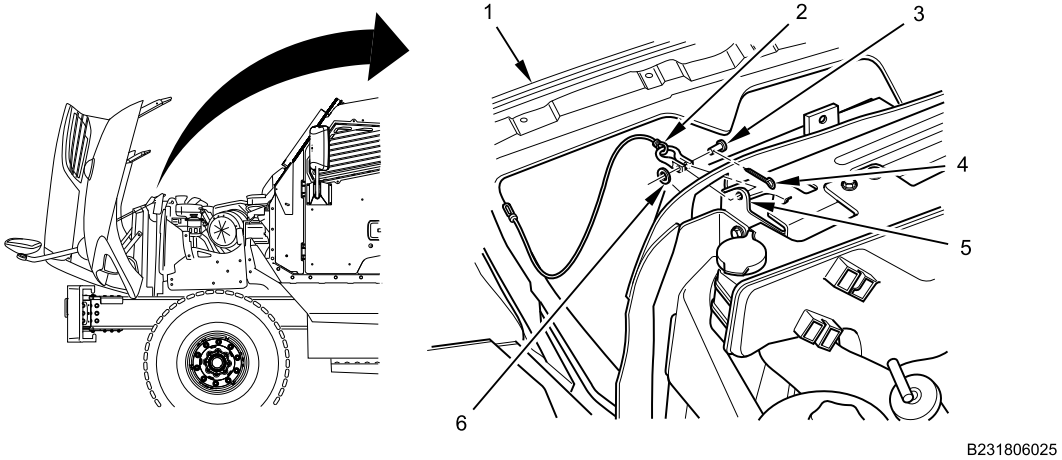

Figure 23. Hood Safety Cable.

5. Connect FSS chassis harness connector (Figure 24, Item 2) to FSS engine sensor (Figure 24, Item 1).

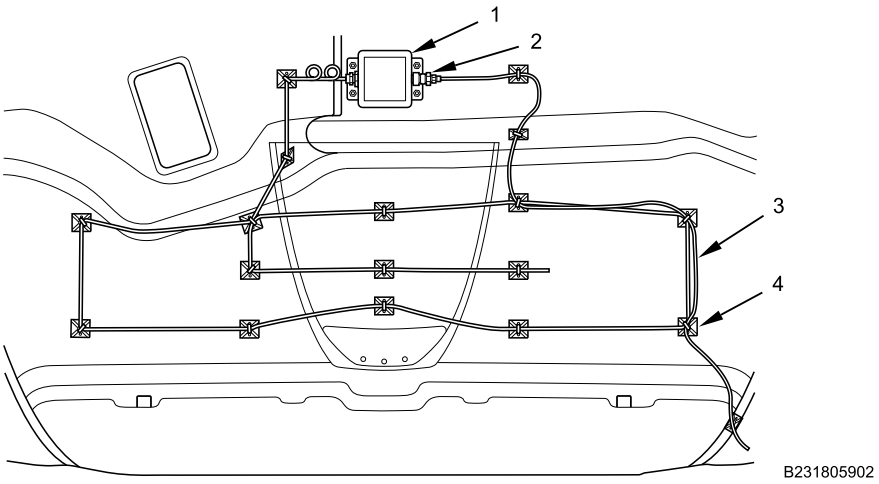

Figure 24. Underside of Hood Assembly.

6. Install new cable lock straps (Figure 24, Item 4) to FSS engine harness (Figure 24, Item 3).

HOOD ASSEMBLY REMOVAL AND INSTALLATION - (CONTINUED)

NOTE

Perform the following two steps for right and left sides. Right side shown; left side similar.

7. Connect headlamp and turn signal harness connector (Figure 25, Item 2).

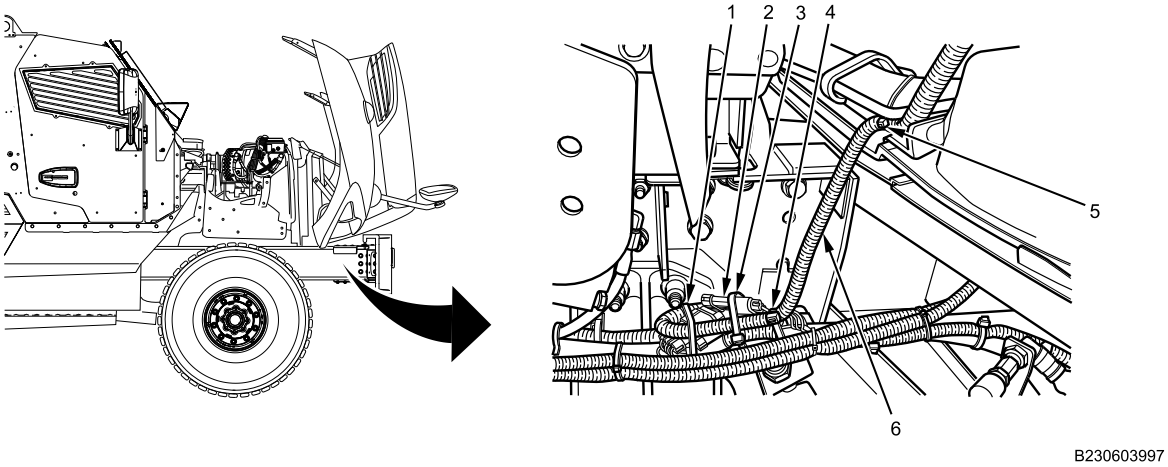

Figure 25. Headlamp and Turn Signal Harness Connector.

8. Install four new cable lock straps (Figure 25, Item 1, 3, 4, and 5) to headlamp harness (Figure 25, Item 6) and tighten securely.

END OF TASK

FOLLOW-ON MAINTENANCE

1. Install front fender light assembly (WP 0371).
2. Enable FSS (WP 0736).
3. Install hood assembly air intake grill (WP 0571).
4. Install hood grille surround assembly (WP 0572).
5. Close and secure hood (TM 9-2355-106-10).
6. Remove wheel chocks (TM 9-2355-106-10).

END OF TASK

END OF WORK PACKAGE

FIELD MAINTENANCE

HOOD MIRROR REMOVAL AND INSTALLATION

INITIAL SETUP:

Tools and Special Tools
General Mechanic's Tool Kit (GMTK) (WP 0795, Item 37)
Attachment, screwdriver, Torx bit, 1/4-inch drive, T27 (WP 0795, Item 9)
Attachment, screwdriver, Torx bit, 1/4-inch drive, T40 (WP 0795, Item 10)

Materials/Parts
Locknut - (3) (WP 0796, Item 152)
Compound (WP 0794, Item 13)
Goggles, industrial (WP 0794, Item 20)
Faceshield, industrial (WP 0794, Item 16)
Gloves (WP 0794, Item 18)

References
TM 9-2355-106-10
TM 9-2355-106-23P
WP 0786
WP 0782

Equipment Condition
Parking brake set (TM 9-2355-106-10)
Transmission set in NEUTRAL (N) (TM 9-2355-106-10)
Engine off (TM 9-2355-106-10)
MAIN POWER switch off (TM 9-2355-106-10)
Wheels chocked (TM 9-2355-106-10)

REMOVAL

NOTE

Left side shown; right side similar.

Locknuts and washers are located on underside of hood.

1. Remove trim cover (Figure 1, Item 1) and glass (Figure 1, Item 2) from mirror housing (Figure 1, Item 3).

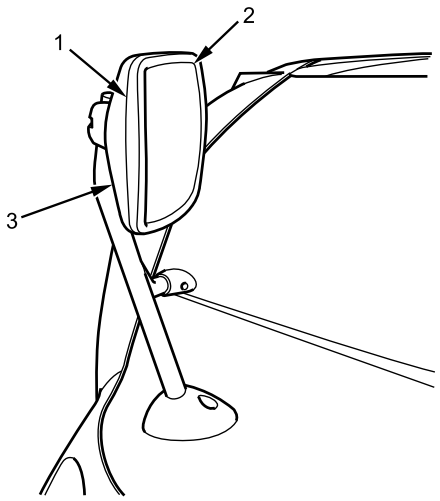

Figure 1. Mirror Trim and Glass.

HOOD MIRROR REMOVAL AND INSTALLATION - (CONTINUED)

NOTE

Locknuts and washers are located on underside of hood.

2. Remove locknut and washer from small mirror support arm cover (Figure 2, Item 3). Discard locknut.

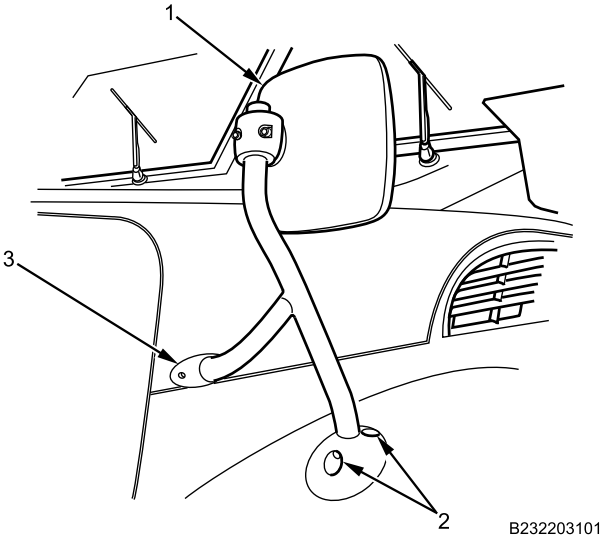

Figure 2. Mirror Assembly.

3. Remove two bolts (Figure 2, Item 2), flat washers, and locknuts from large mirror support arm cover. Discard locknuts.
4. Remove mirror assembly (Figure 2, Item 1) from hood assembly.

END OF TASK

INSTALLATION

WARNING

Corrosion preventive compound is toxic. Use only in well-ventilated area. Do not get in eyes; wear chemical safety goggles and full-face shield when using. Avoid contact with skin and wear rubber or plastic, solvent-resistant gloves. In case of contact, remove contaminated clothing and immediately wash area with soap and water. If compound contacts eyes, flush eyes with large amounts of water for at least 15 minutes and get immediate medical attention. If swallowed, do not induce vomiting; contact a physician immediately. Failure to comply may result in serious injury or death to personnel.

1. Apply corrosion preventive compound on all hood mirror bolt threads.

HOOD MIRROR REMOVAL AND INSTALLATION - (CONTINUED)

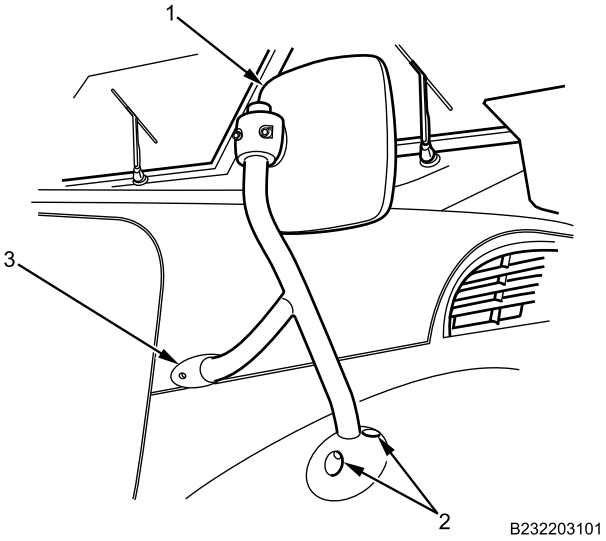

Figure 3. Mirror Assembly.

2. Position mirror assembly (Figure 3, Item 1) on hood and install washer and new locknut on small cover (Figure 3, Item 3). Do not tighten.
3. Install two bolts (Figure 3, Item 2), washers, and new locknuts on large cover. Tighten all three mirror support arm locknuts securely.
4. Install mirror glass (Figure 4, Item 2) and trim cover (Figure 4, Item 1) on mirror housing (Figure 4, Item 3).

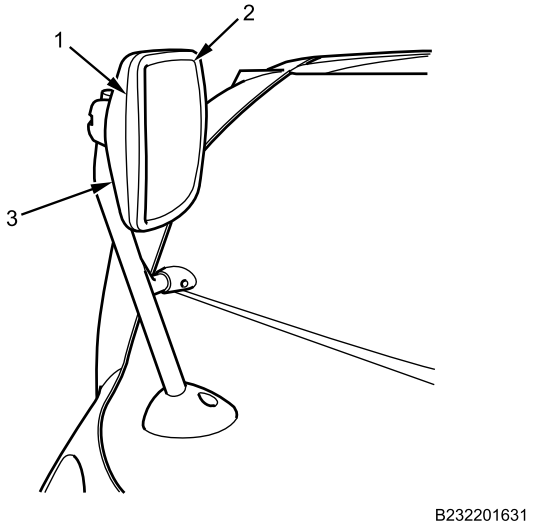

Figure 4. Mirror Trim and Glass.

END OF TASK

HOOD MIRROR REMOVAL AND INSTALLATION - (CONTINUED)

FOLLOW-ON MAINTENANCE

1. Remove wheel chocks (TM 9-2355-106-10).

END OF TASK

END OF WORK PACKAGE

FIELD MAINTENANCE

INSTRUMENT PANEL (IP) REMOVAL AND INSTALLATION

INITIAL SETUP:

Tools and Special Tools
General Mechanic's Tool Kit (GMTK) (WP 0795, Item 37)
Wrench, torque, 20-100 lb-ft, 3/8-inch drive (WP 0795, Item 141)
Wrench, torque, 40-200 lb-in. 3/8-inch drive (WP 0795, Item 142)

Materials/Parts
Goggles, industrial (WP 0794, Item 20)
Faceshield, industrial (WP 0794, Item 16)
Gloves (WP 0794, Item 18)
Compound (WP 0794, Item 13)
Grease (WP 0794, Item 22)
Cable lock strap - (14) (WP 0796, Item 124)

Personnel Required
Maintainer (2)

References
TM 9-2355-106-10
TM 9-2355-106-23P
WP 0782

Equipment Condition
Parking brake set (TM 9-2355-106-10)
Transmission set in NEUTRAL (N) (TM 9-2355-106-10)
Engine off (TM 9-2355-106-10)
MAIN POWER switch off (TM 9-2355-106-10)
Wheels chocked (TM 9-2355-106-10)
Engine hood open and secure (TM 9-2355-106-10)
Battery cables disconnected (WP 0404)
A-pillar panels removed (WP 0642)
Antilock Brake System (ABS) module removed (WP 0355)
Steering wheel removed (WP 0534)
IP cluster removed (WP 0297)
IP center closeout removed (WP 0579)
IP right side closeout removed (WP 0580)

REMOVAL

1. Remove IP center mounting brace bolt (Figure 1, Item 1) from under cowl.

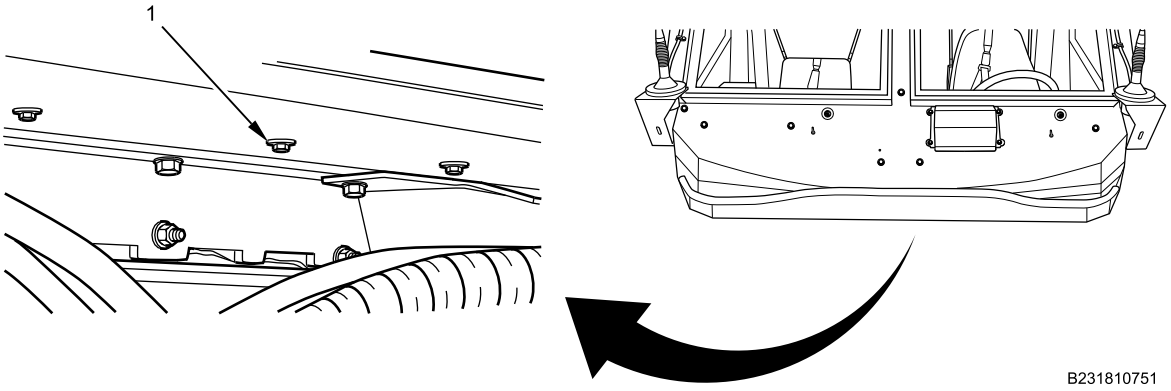

Figure 1. IP Center Mounting Brace Bolt.

INSTRUMENT PANEL (IP) REMOVAL AND INSTALLATION - (CONTINUED)

2. Disconnect cap (Figure 2, Item 3) from receptacle data link connector (Figure 2, Item 6).
3. Remove screws (Figure 2, Item 2, 4, 5, and 7) from receptacle data link connector IP bracket (Figure 2, Item 1).
4. Remove receptacle data link connector (Figure 2, Item 6) from IP bracket (Figure 2, Item 1).

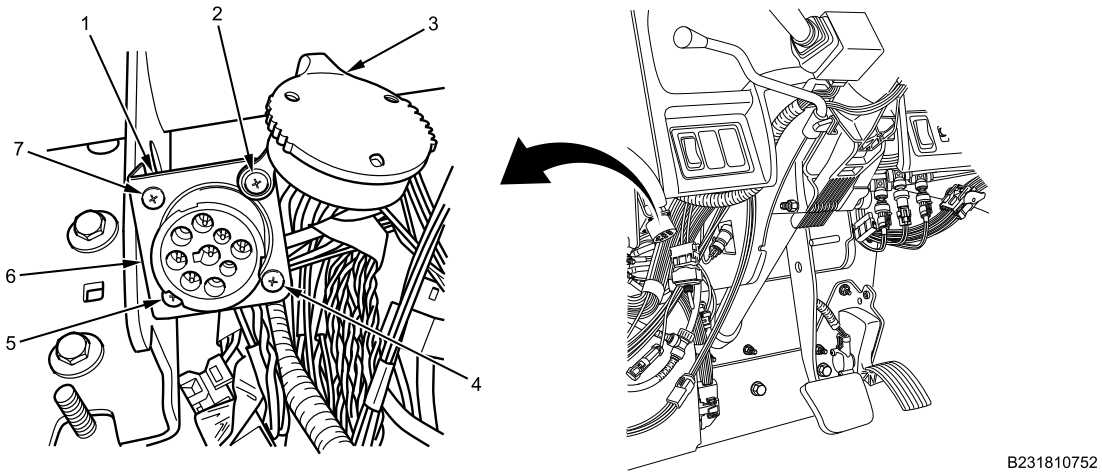

Figure 2. Data Link Connector.

5. Remove IP steering column bolts (Figure 3, Item 2 and 3) from steering column (Figure 3, Item 1).

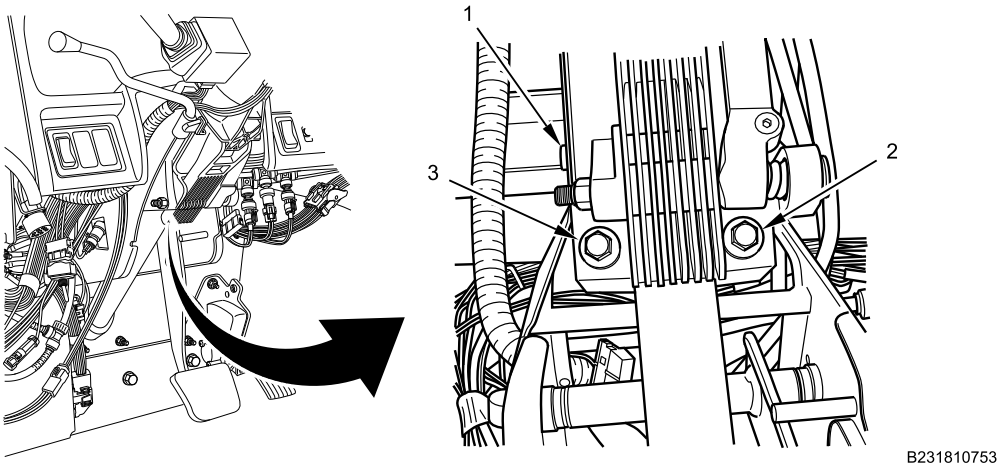

Figure 3. Steering Column Bolts.

INSTRUMENT PANEL (IP) REMOVAL AND INSTALLATION - (CONTINUED)

6. Remove nut (Figure 4, Item 1) from ignition switch (Figure 4, Item 2).
7. Remove ignition switch (Figure 4, Item 2) from IP.

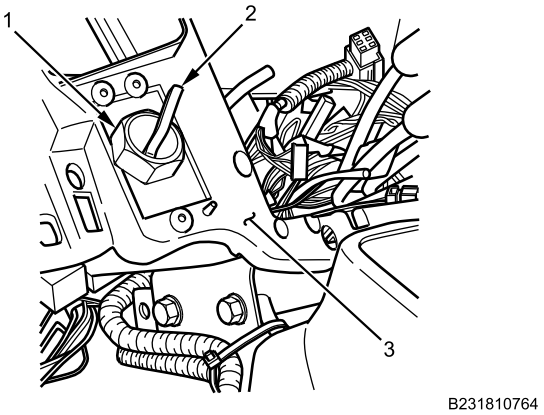

Figure 4. Ignition Switch Nut.

8. Remove transmission auto shift driver control module mounting bolts (Figure 5, Item 2) from IP.
9. Remove transmission auto shift driver control module (Figure 5, Item 1) from IP.

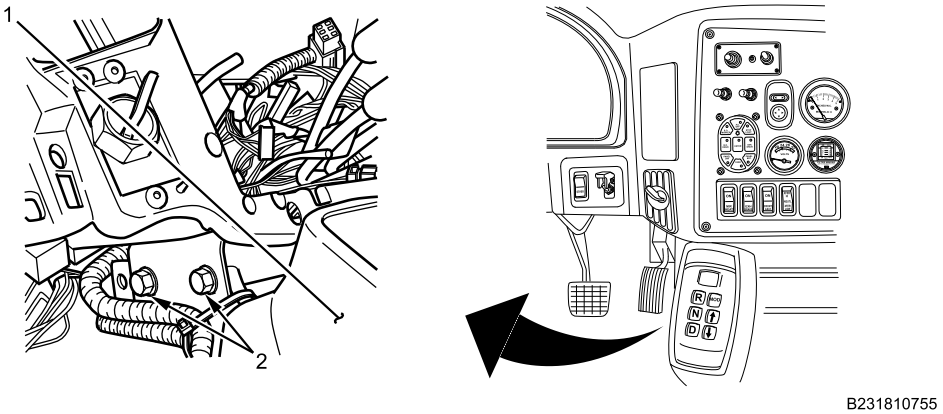

Figure 5. Transmission Auto Shift Driver Control Module.

INSTRUMENT PANEL (IP) REMOVAL AND INSTALLATION - (CONTINUED)

10. Remove three IP circuit breaker, fuse, and relay center mounting screws (Figure 6, Item 1 through 3) from IP.
11. Remove IP circuit breaker, fuse, and relay center (Figure 6, Item 4) from IP.

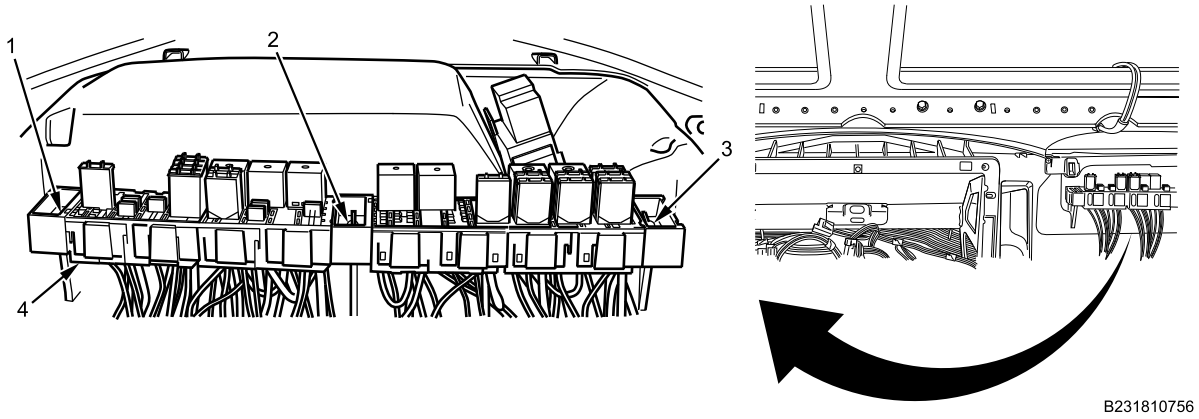

Figure 6. IP Circuit Breaker, Fuse, and Relay Center.

12. Remove A/C condenser fan relay assembly (Figure 7, Item 1) from IP.

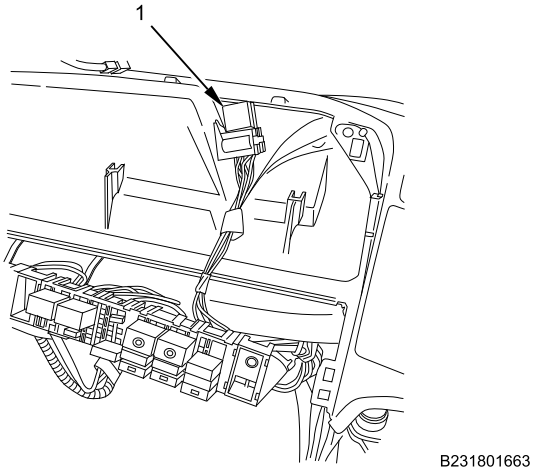

Figure 7. Air Conditioning (A/C) Condenser Fan Relays.

INSTRUMENT PANEL (IP) REMOVAL AND INSTALLATION - (CONTINUED)

13. Remove three wiring harness cable lock straps (Figure 8, Item 1 through 3) from IP wiring harness bundle and IP brace through IP right side closeout opening. Discard cable lock straps.

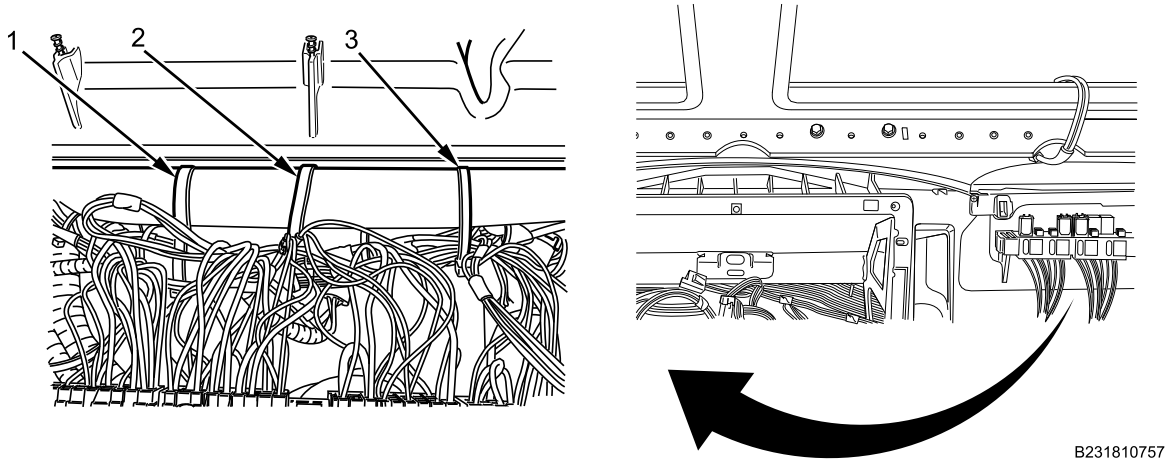

Figure 8. IP Wiring Harness Cable Lock Straps.

14. Remove right side wiring harness cable lock strap (Figure 9, Item 2) from IP wiring harness bundle and IP brace cable lock strap retainer (Figure 9, Item 1) through IP right side closeout opening. Discard cable lock strap.

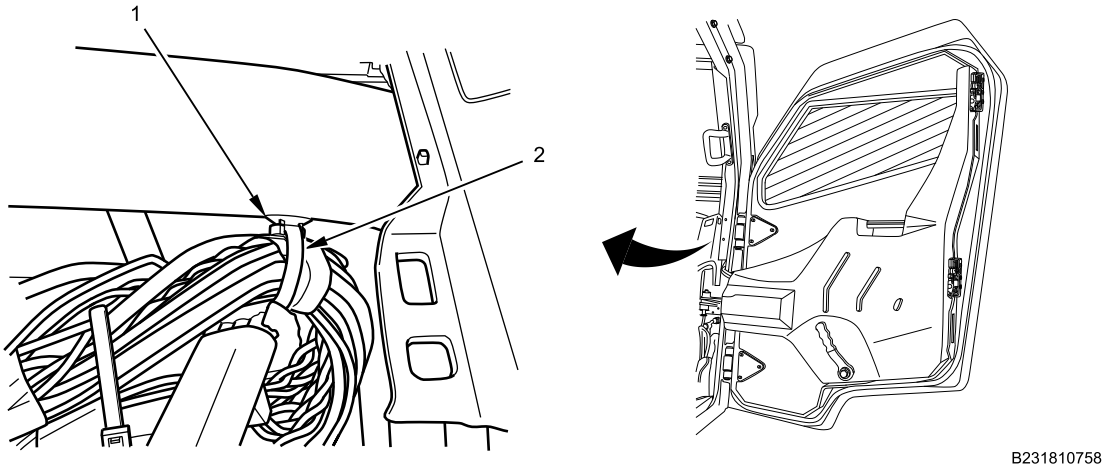

Figure 9. IP Wiring Harness Cable Lock Straps.

INSTRUMENT PANEL (IP) REMOVAL AND INSTALLATION - (CONTINUED)

15. Remove left wiring harness cable lock strap (Figure 10, Item 1) from IP wiring harness bundle and IP brace bracket through IP right side closeout opening. Discard cable lock strap.
16. Remove two right wiring harness cable lock straps (Figure 10, Item 2 and 4) from IP wiring harness bundle and IP brace bracket clip (Figure 10, Item 3). Discard cable lock straps.

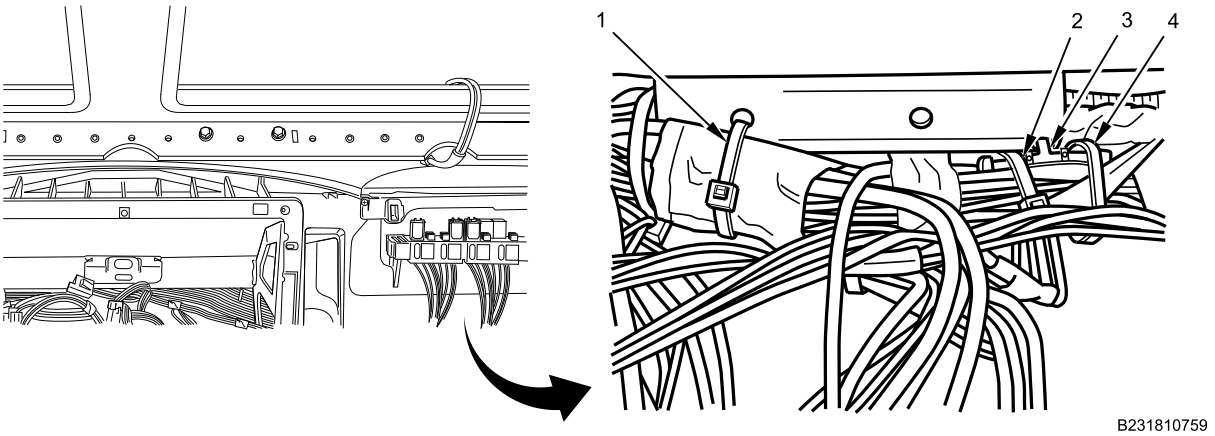

Figure 10. IP Wiring Harness Cable Lock Straps.

17. Remove left side wiring harness cable lock strap (Figure 11, Item 2) from IP wiring harness bundle and IP brace cable lock strap retainer (Figure 11, Item 1) through IP right side closeout opening. Discard cable lock strap.

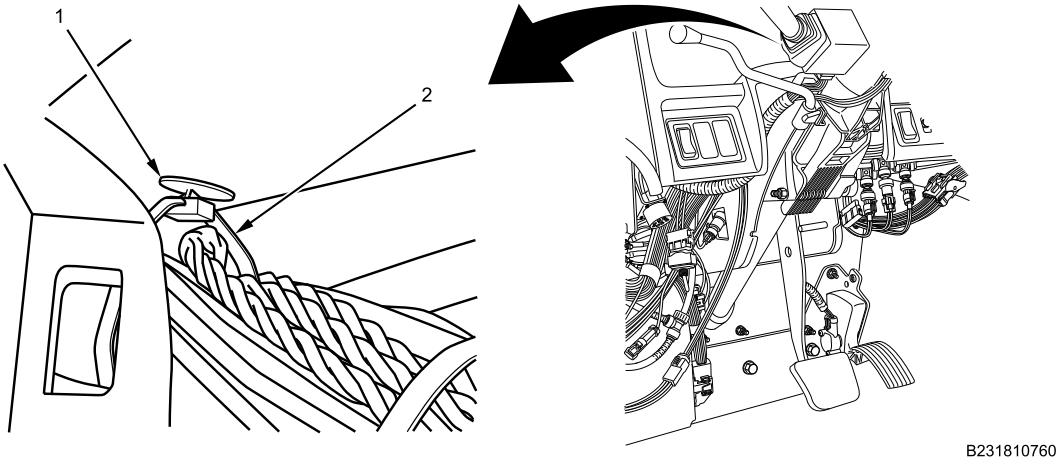

Figure 11. IP Wiring Harness Cable Lock Straps.

INSTRUMENT PANEL (IP) REMOVAL AND INSTALLATION - (CONTINUED)

18. Remove three wiring harness cable lock straps (Figure 12, Item 1, 2, and 3) from IP wiring harness bundle and IP brace cable lock strap retainers through IP center closeout opening. Discard cable lock straps.

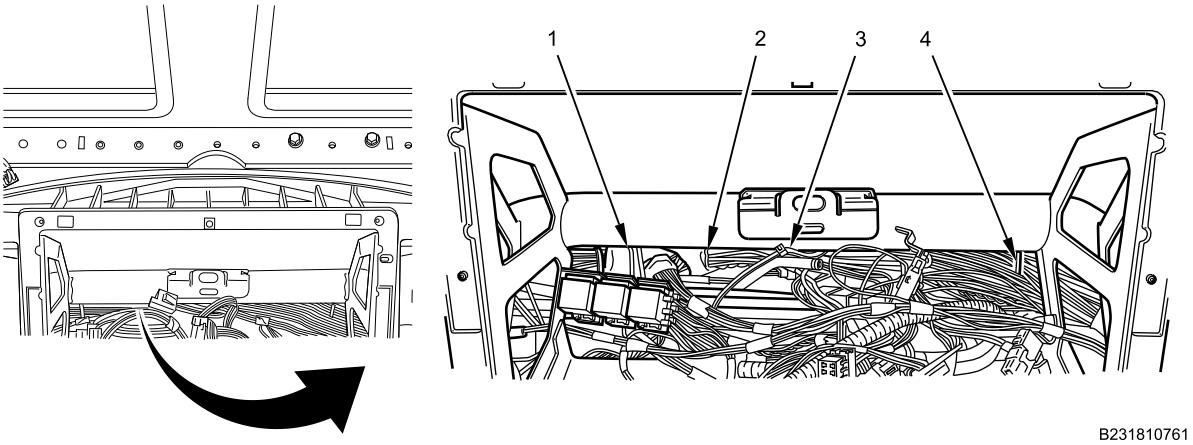

Figure 12. IP Wiring Harness Cable Lock Straps.

19. Remove three wiring harness cable lock straps (Figure 13, Item 1, 2, and 3) from IP wiring harness bundle and IP brace cable lock strap retainers through IP cluster opening. Discard cable lock straps.

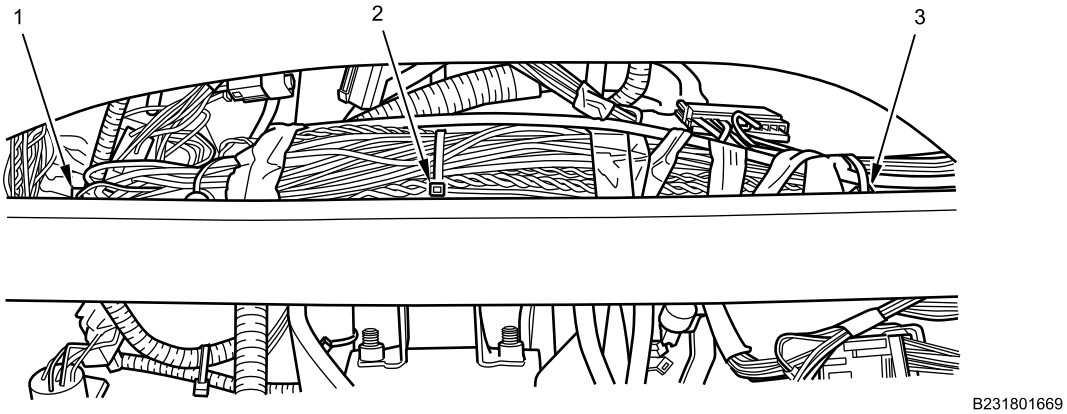

Figure 13. IP Wiring Harness Cable Lock Straps.

INSTRUMENT PANEL (IP) REMOVAL AND INSTALLATION - (CONTINUED)

20. Remove left IP bracket bolts (Figure 14, Item 1 and 3) from left IP bracket (Figure 14, Item 2).

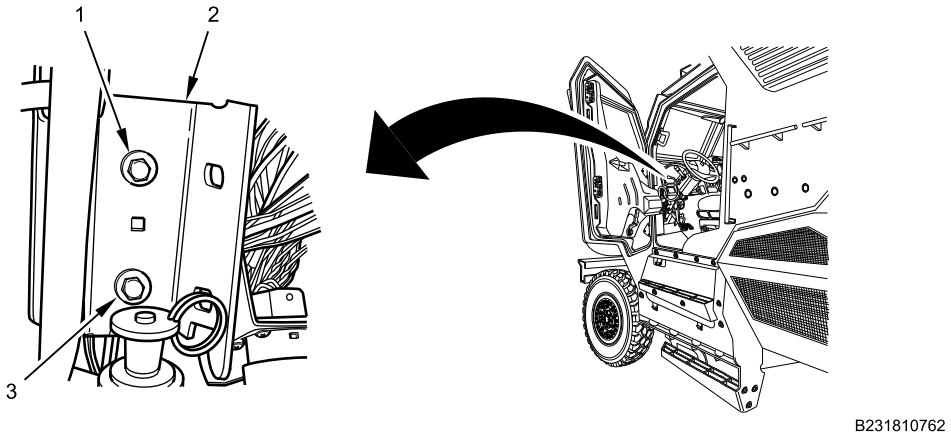

Figure 14. Left IP Mounting Bolts.

21. Remove right IP bracket bolts (Figure 15, Item 1 and 3) from right IP bracket (Figure 15, Item 2).

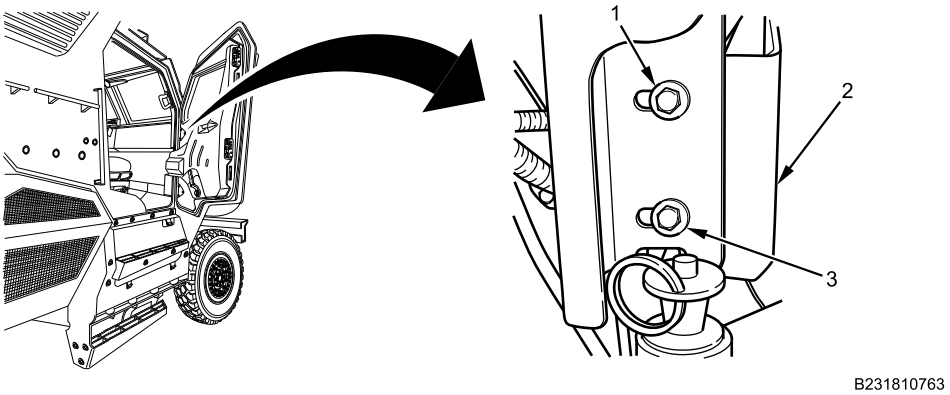

Figure 15. Right IP Mounting Bolts.

22. Remove IP from vehicle with crewmember assistance.

INSTRUMENT PANEL (IP) REMOVAL AND INSTALLATION - (CONTINUED)

23. Remove IP center mounting brace bolt (Figure 16, Item 3) from front of IP (Figure 16, Item 1) and remove IP center mounting brace (Figure 16, Item 2).

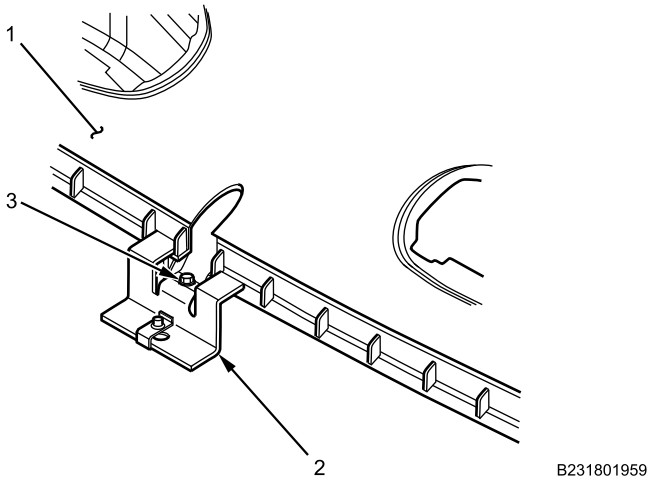

Figure 16. IP Center Mounting Brace.

END OF TASK

INSTALLATION

1. Install IP center mounting brace (Figure 17, Item 2) on front of IP (Figure 17, Item 1) with IP center mounting brace bolt (Figure 17, Item 3). Torque bolt to 90-100 lb-in. (10-11 N•m).

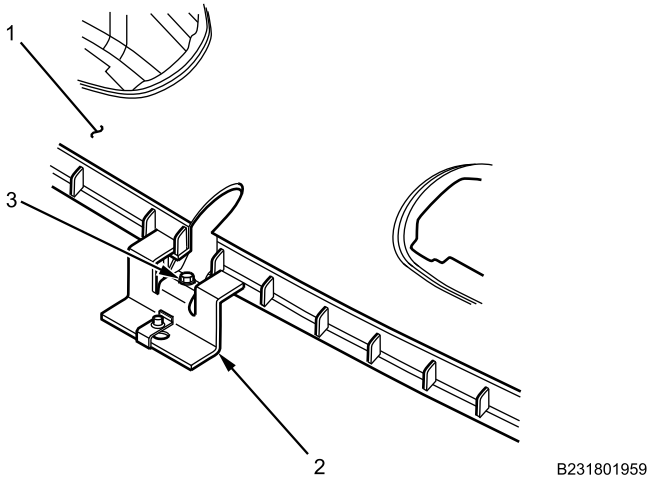

Figure 17. IP Center Mounting Brace.

2. Install IP on vehicle with crewmember assistance.

INSTRUMENT PANEL (IP) REMOVAL AND INSTALLATION - (CONTINUED)

WARNING

Corrosion preventive compound is toxic. Use only in well-ventilated area. Do not get in eyes; wear chemical safety goggles and full-face shield when using. Avoid contact with skin and wear rubber or plastic, solvent-resistant gloves. In case of contact, remove contaminated clothing and immediately wash area with soap and water. If compound contacts eyes, flush eyes with large amounts of water for at least 15 minutes and get immediate medical attention. If swallowed, do not induce vomiting; contact a physician immediately. Failure to comply may result in serious injury or death to personnel.

3. Apply corrosion preventive compound to IP center mounting brace bolt (Figure 18, Item 1).
4. Install IP center mounting brace bolt (Figure 18, Item 1) from under cowl and torque bolt to 90-100 lb-in. (10-11 N•m).

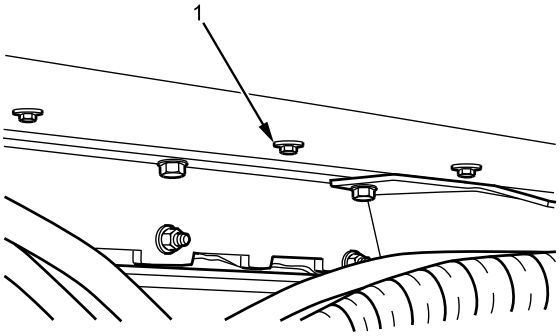

B231801671

Figure 18. IP Center Mounting Brace Bolt.

INSTRUMENT PANEL (IP) REMOVAL AND INSTALLATION - (CONTINUED)

5. Install right IP bracket bolts (Figure 19, Item 1 and 3) on right IP bracket (Figure 19, Item 2). Do not tighten at this time.

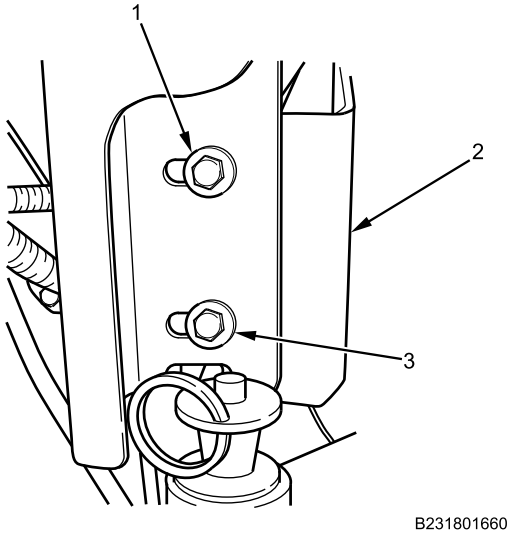

Figure 19. Right IP Mounting Bolts.

6. Install left IP bracket bolts (Figure 20, Item 1 and 3) on left IP bracket (Figure 20, Item 2).

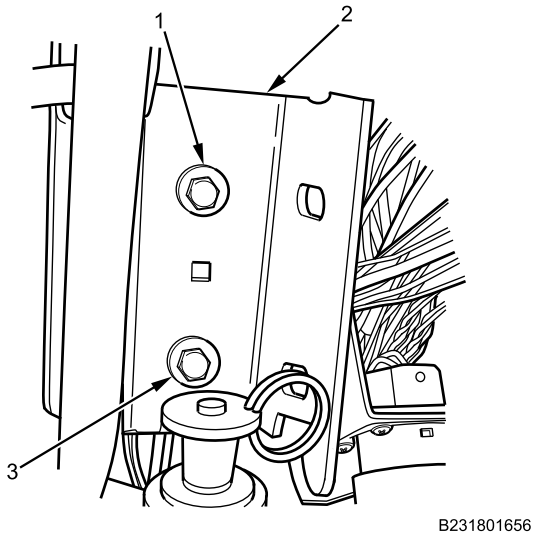

Figure 20. Left IP Mounting Bolts.

7. Torque right and left IP bracket bolts to 17-21 lb-ft (23-29 N•m).

INSTRUMENT PANEL (IP) REMOVAL AND INSTALLATION - (CONTINUED)

8. Install IP steering column bolts (Figure 21, Item 2 and 3) on steering column (Figure 21, Item 1) and torque bolts to 125-210 lb-in. (35-59 N•m).

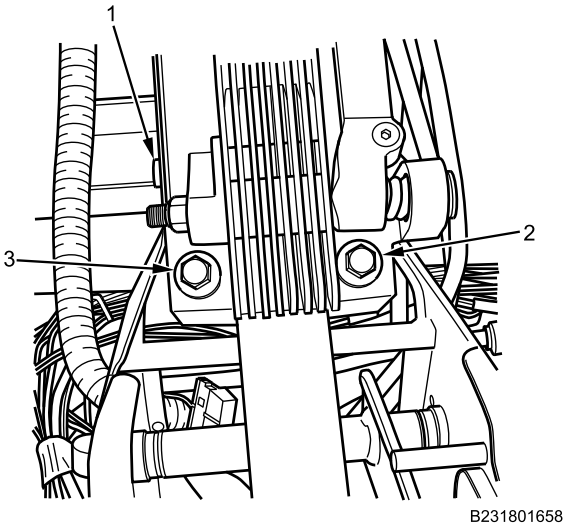

Figure 21. Steering Column Bolts.

9. Install receptacle data link connector (Figure 22, Item 6) on IP bracket (Figure 22, Item 1).
10. Install cap (Figure 22, Item 3) on receptacle data link connector IP bracket (Figure 22, Item 1) with screw (Figure 22, Item 2) and tighten screw securely.
11. Install remaining screws (Figure 22, Item 4, 5, and 7) on receptacle data link connector IP bracket (Figure 22, Item 1) and tighten screws securely.
12. Connect cap (Figure 22, Item 3) on receptacle data link connector (Figure 22, Item 6).

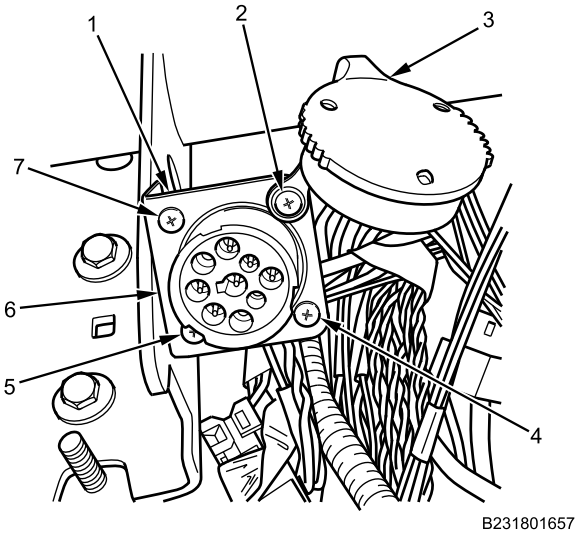

Figure 22. Data Link Connector.

INSTRUMENT PANEL (IP) REMOVAL AND INSTALLATION - (CONTINUED)

13. Install ignition switch (Figure 23, Item 2) on IP.
14. Install retaining ring (Figure 23, Item 1) on ignition switch (Figure 23, Item 2) and tighten securely.
15. Position transmission auto shift driver control module (Figure 23, Item 3) on IP.
16. Install transmission auto shift driver control module mounting bolts (Figure 23, Item 4) on IP and torque bolts to 125-210 lb-in. (35-59 N•m).

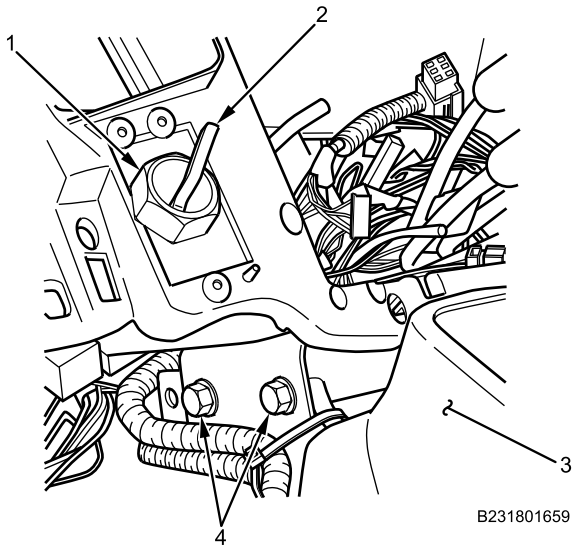

Figure 23. Ignition Switch and Transmission Auto Shift Driver Control Module.

17. Install two new right wiring harness cable lock straps (Figure 24, Item 2 and 4) on IP wiring harness bundle and IP brace bracket clip (Figure 24, Item 1) through IP right side closeout opening.
18. Install new left wiring harness cable lock strap (Figure 24, Item 1) on IP wiring harness bundle and IP brace bracket.

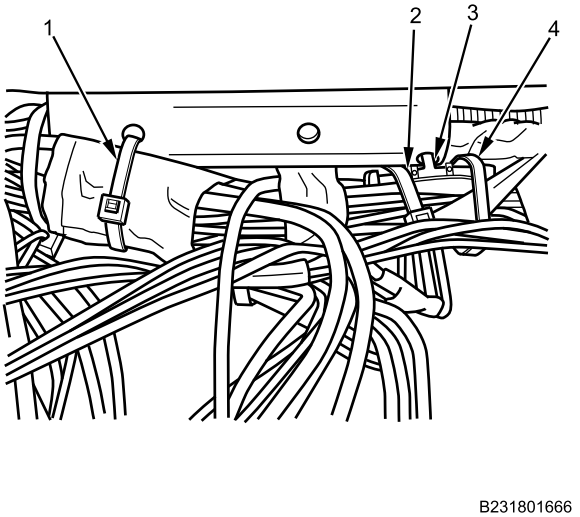

Figure 24. IP Wiring Harness Cable Lock Straps.

INSTRUMENT PANEL (IP) REMOVAL AND INSTALLATION - (CONTINUED)

19. Install new right side wiring harness cable lock strap (Figure 25, Item 2) on IP wiring harness bundle and IP brace cable lock strap retainer (Figure 25, Item 1) through IP right side closeout opening.

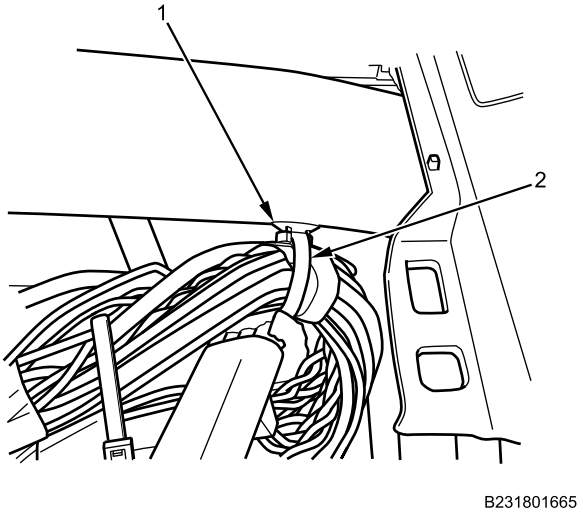

Figure 25. IP Wiring Harness Cable Lock Straps.

20. Install three new wiring harness cable lock straps (Figure 26, Item 1 through 3) on IP wiring harness bundle and IP brace through IP right side closeout opening.

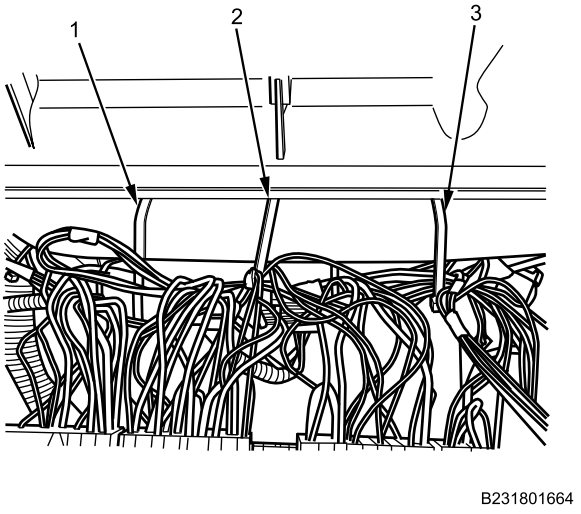

Figure 26. IP Wiring Harness Cable Lock Straps.

INSTRUMENT PANEL (IP) REMOVAL AND INSTALLATION - (CONTINUED)

21. Install new left side wiring harness cable lock strap (Figure 27, Item 2) on IP wiring harness bundle and IP brace cable lock strap retainer (Figure 27, Item 1) through IP passenger closeout opening.

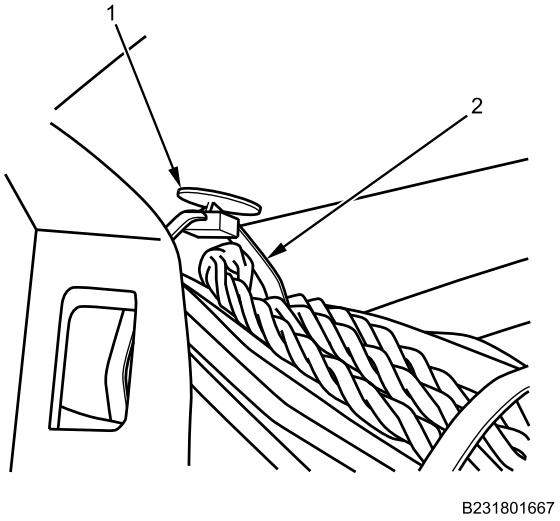

Figure 27. IP Wiring Harness Cable Lock Straps.

22. Install A/C condenser fan relay assembly (Figure 28, Item 1) on IP.

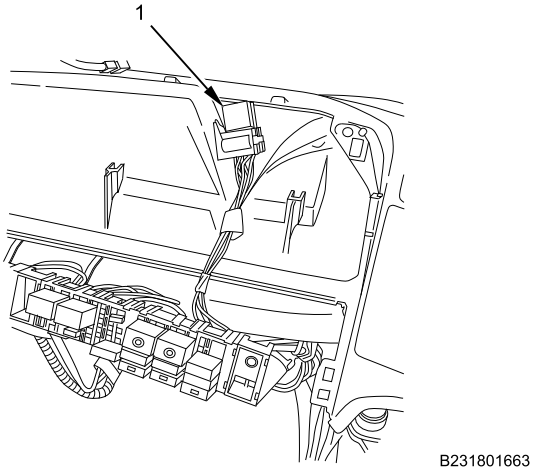

Figure 28. A/C Condenser Fan Relays.

INSTRUMENT PANEL (IP) REMOVAL AND INSTALLATION - (CONTINUED)

23. Install IP circuit breaker, fuse, and relay center (Figure 29, Item 4) on IP.
24. Install three IP circuit breaker, fuse, and relay center mounting screws (Figure 29, Item 1 through 3) on IP and tighten screws securely.

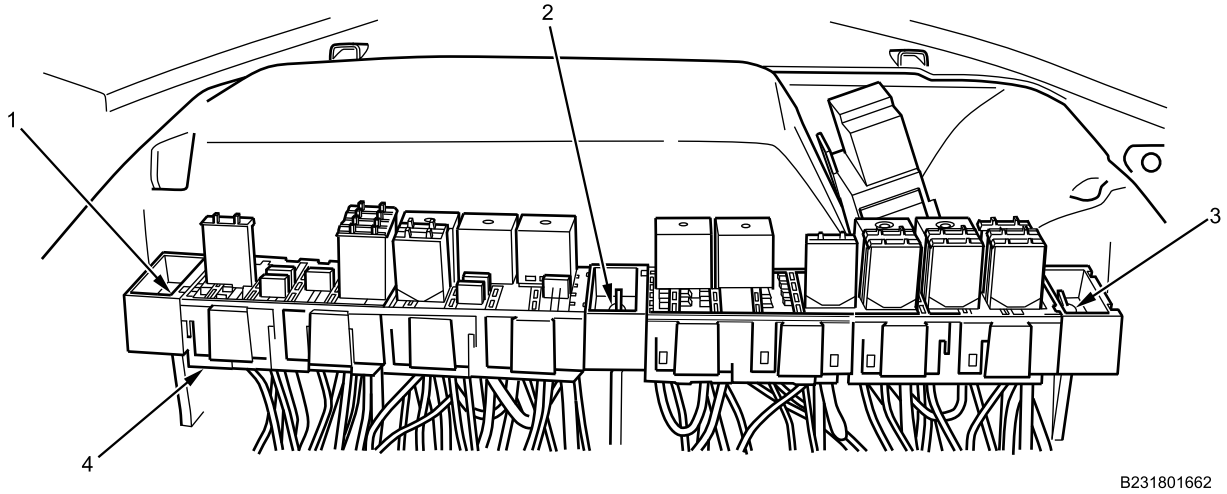

Figure 29. IP Circuit Breaker, Fuse, and Relay Center.

25. Install three new wiring harness cable lock straps (Figure 30, Item 1 through 3) on IP wiring harness bundle and IP brace cable lock strap retainers through IP center closeout opening.

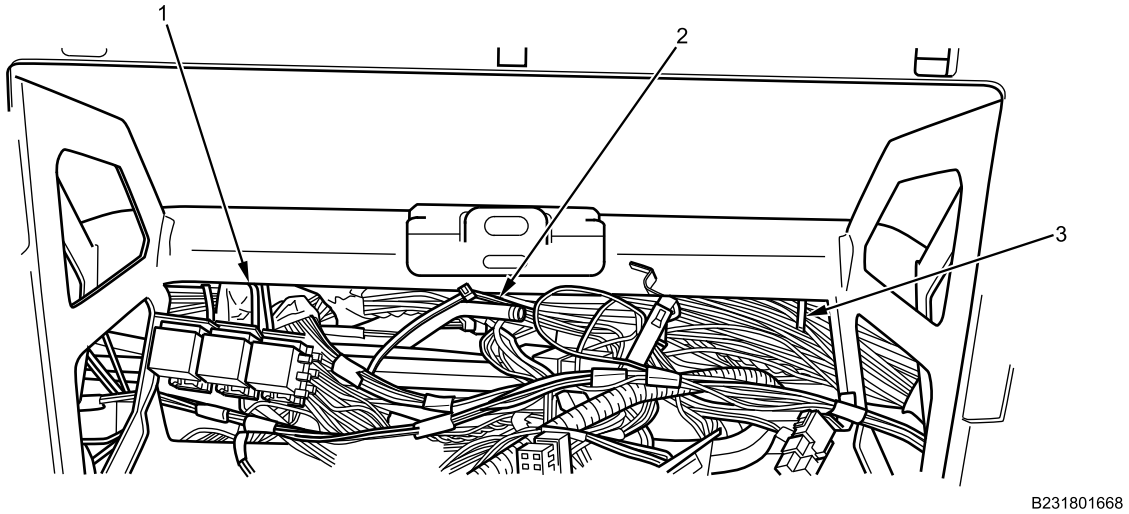

Figure 30. IP Wiring Harness Cable Lock Straps.

INSTRUMENT PANEL (IP) REMOVAL AND INSTALLATION - (CONTINUED)

26. Install three new wiring harness cable lock straps (Figure 31, Item 1 through 3) on IP wiring harness bundle and IP brace cable lock strap retainers through IP cluster opening.

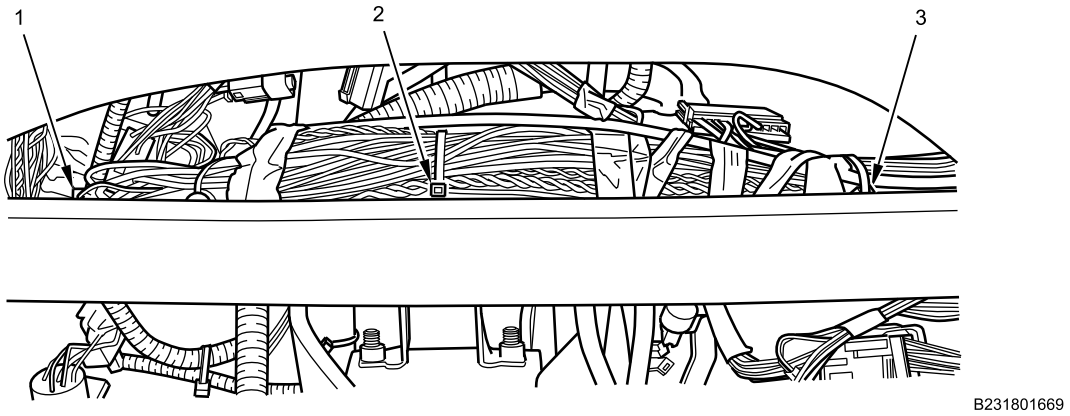

Figure 31. IP Wiring Harness Cable Lock Straps.

END OF TASK

FOLLOW-ON MAINTENANCE

1. Install IP right side closeout (WP 0580).
2. Install IP center closeout (WP 0579).
3. Install IP cluster (WP 0297).
4. Install steering wheel (WP 0534).
5. Install ABS module (WP 0355).
6. Install A-pillar panels (WP 0642).
7. Connect battery cables (WP 0404).
8. Close and secure engine hood (TM 9-2355-106-10).
9. Remove wheel chocks (TM 9-2355-106-10).
10. Turn MAIN POWER switch on (TM 9-2355-106-10).
11. Test-drive vehicle to verify instrument panel component operation (TM 9-2355-106-10).
12. Vehicle parking brake set (TM 9-2355-106-10).
13. Set transmission in NEUTRAL (N) (TM 9-2355-106-10).
14. Turn engine off (TM 9-2355-106-10).
15. Turn MAIN POWER switch off (TM 9-2355-106-10).

END OF TASK

END OF WORK PACKAGE

FIELD MAINTENANCE

INSTRUMENT PANEL (IP) CLUSTER CLOSEOUT REMOVAL AND INSTALLATION

INITIAL SETUP:

Tools and Special Tools
General Mechanic's Tool Kit (GMTK) (WP 0795, Item 37)

References
TM 9-2355-106-10
TM 9-2355-106-23P
WP 0782

Equipment Condition
Parking brake set (TM 9-2355-106-23)
Transmission set in NEUTRAL (N) (TM 9-2355-106-23)
Engine off (TM 9-2355-106-23)
MAIN POWER switch off (TM 9-2355-106-23)
Wheels chocked (TM 9-2355-106-23)
Steering wheel column lower shroud removed (WP 0565)
Steering wheel removed (WP 0534)

REMOVAL

1. Disengage top of instrument panel cluster closeout (Figure 1, Item 1) by pulling towards steering wheel.

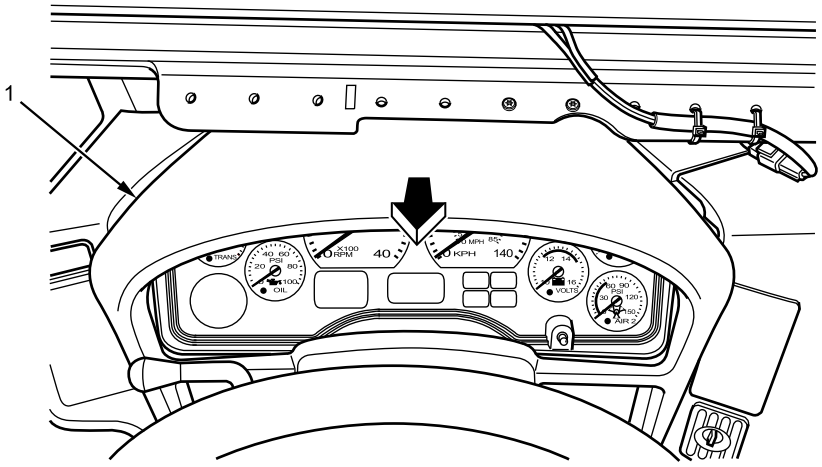

B230601478

Figure 1. Instrument Panel Cluster Closeout Panel.

INSTRUMENT PANEL (IP) CLUSTER CLOSEOUT REMOVAL AND INSTALLATION - (CONTINUED)

2. Disengage bottom corners of instrument panel cluster closeout (Figure 2, Item 2 and 3) by pulling towards steering wheel. Remove instrument panel cluster closeout (Figure 2, Item 1).

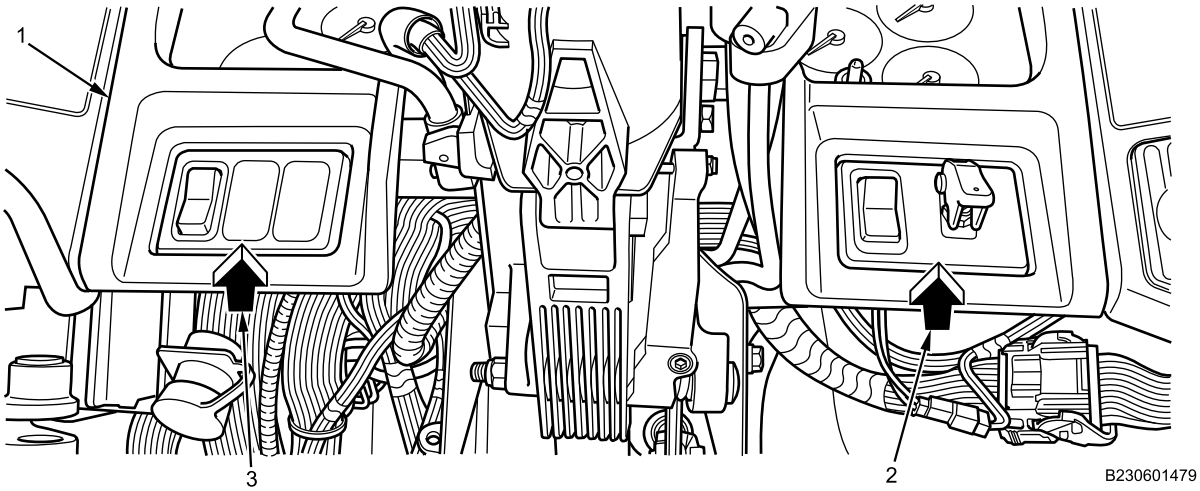

Figure 2. Instrument Panel Cluster Closeout Panel.

END OF TASK

INSTALLATION

1. Align and install lower corner instrument panel cluster closeout clips (Figure 3, Item 2 and 4) and pin (Figure 3, Item 5) into slots (Figure 3, Item 1, 3, and 6).

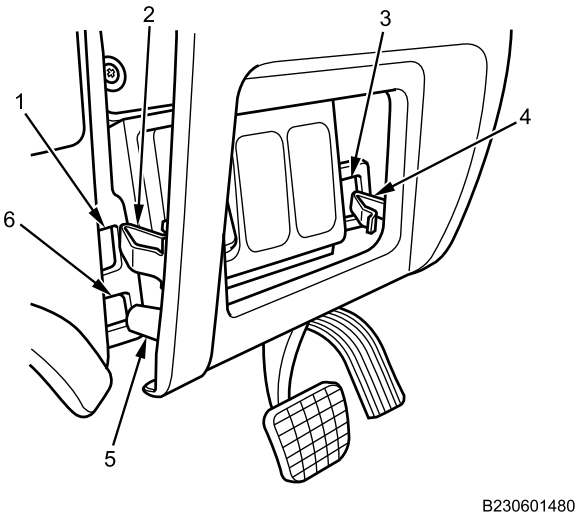

Figure 3. Instrument Panel Cluster Closeout Panel.

2. Install top of instrument panel cluster closeout (Figure 4, Item 1) by pushing towards front of vehicle.

INSTRUMENT PANEL (IP) CLUSTER CLOSEOUT REMOVAL AND INSTALLATION - (CONTINUED)

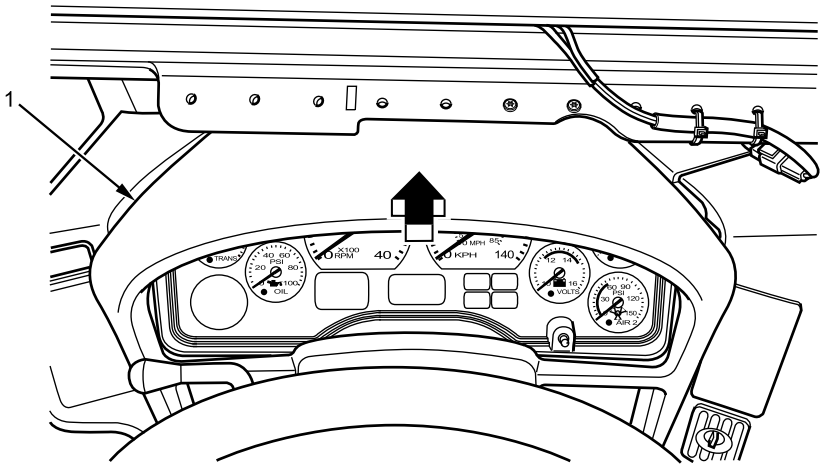

B230601481

Figure 4. Instrument Panel Cluster Closeout Panel.

END OF TASK

FOLLOW-ON MAINTENANCE

1. Install steering wheel column lower shroud (WP 0565).
2. Install steering wheel (WP 0534).
3. Turn MAIN POWER switch on (TM 9-2355-106-23).
4. Remove wheel chocks (TM 9-2355-106-23).
5. Test-drive vehicle to verify steering column and instrument cluster operation (TM 9-2355-106-23).
6. Set transmission in NEUTRAL (N) (TM 9-2355-106-23).
7. Set vehicle parking brake (TM 9-2355-106-23).
8. Turn engine off (TM 9-2355-106-23).
9. Turn MAIN POWER switch off (TM 9-2355-106-23).

END OF TASK

END OF WORK PACKAGE

FIELD MAINTENANCE

INSTRUMENT PANEL (IP) CENTER CLOSEOUT REMOVAL AND INSTALLATION

INITIAL SETUP:

Tools and Special Tools
General Mechanic's Tool Kit (GMTK) (WP 0795, Item 37)

References
TM 9-2355-106-10
TM 9-2355-106-23P
WP 0782

Equipment Condition
Parking brake set (TM 9-2355-106-10)
Transmission set in NEUTRAL (N) (TM 9-2355-106-10)
Engine off (TM 9-2355-106-10)
MAIN POWER switch off (TM 9-2355-106-10)
Wheels chocked (TM 9-2355-106-10)
Instrument panel center trim panel removed (WP 0581)

REMOVAL

1. Loosen top of instrument panel cluster closeout panel (Figure 1, Item 1) from instrument panel (Figure 1, Item 2) by pulling towards steering wheel (Figure 1, Item 3).

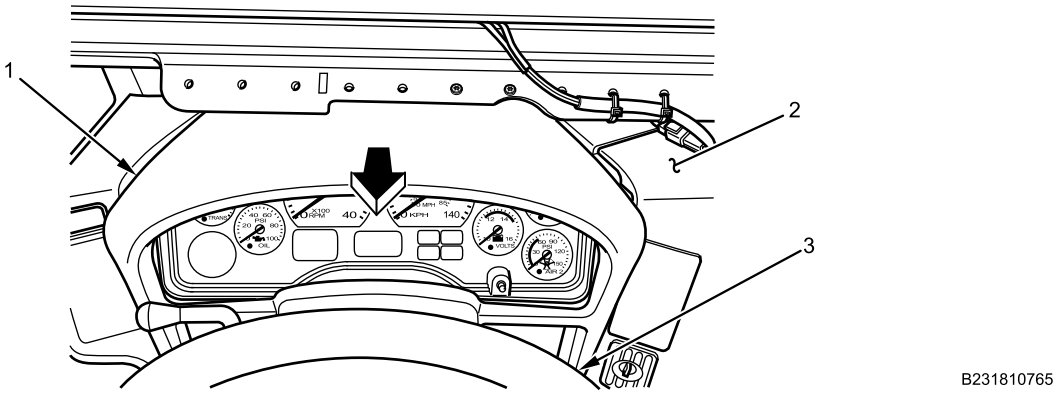

Figure 1. Instrument Panel Cluster Closeout.

2. Remove fuse access panel (Figure 2, Item 1) by pulling top of fuse access panel (Figure 2, Item 1) back and then up.

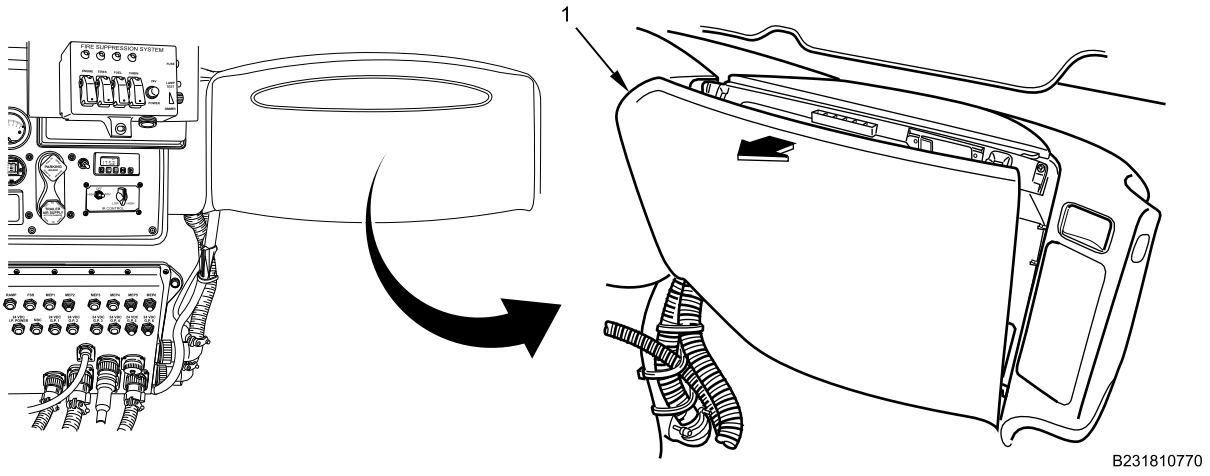

Figure 2. Instrument Panel Right Side Closeout Fuse Access Panel.

INSTRUMENT PANEL (IP) CENTER CLOSEOUT REMOVAL AND INSTALLATION - (CONTINUED)

3. Remove engine start switch cover (Figure 3, Item 1) from instrument panel center closeout (Figure 3, Item 2).

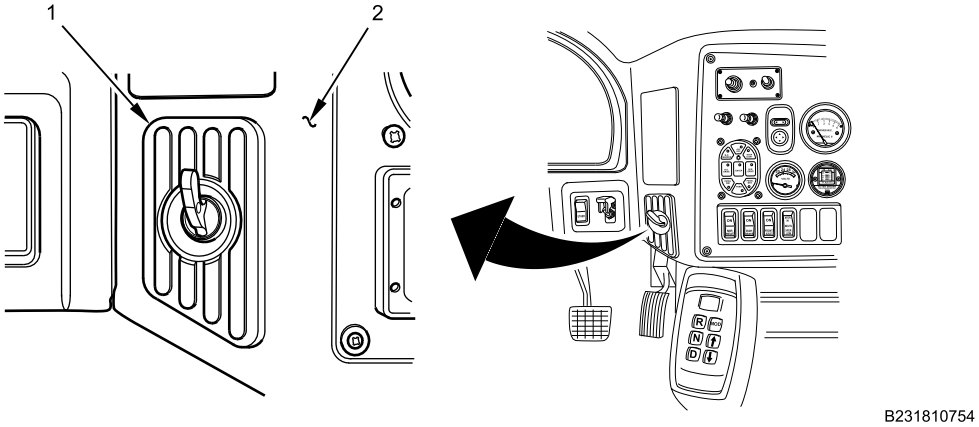

Figure 3. Engine Start Switch Cover.

4. Tuck all electrical harnesses and air lines (Figure 4, Item 2) inside instrument panel center closeout panel.
5. Remove instrument panel center closeout (Figure 4, Item 1) by first pulling top of instrument panel center closeout (Figure 4, Item 1) and then at each lower corner (Figure 4, Item 3).

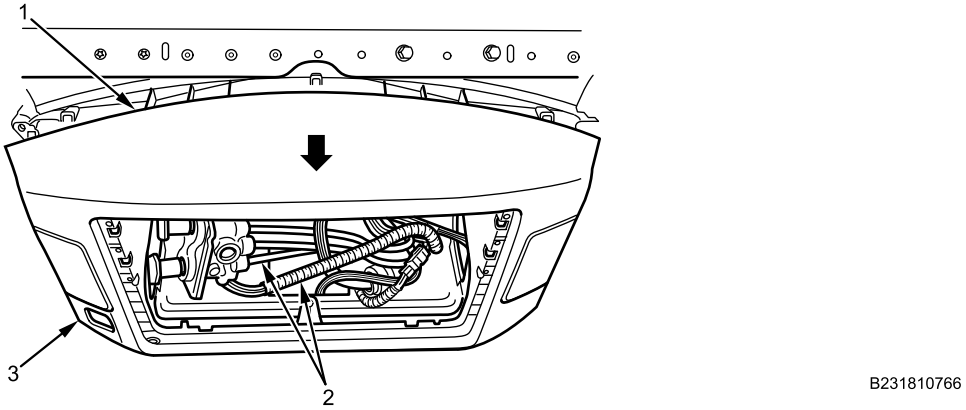

Figure 4. Instrument Panel Center Closeout Removal.

END OF TASK

INSTRUMENT PANEL (IP) CENTER CLOSEOUT REMOVAL AND INSTALLATION - (CONTINUED)

INSTALLATION

1. Ensure access to instrument panel center closeout alignment slots (Figure 5, Item 1 through 6) are clear of obstructions.

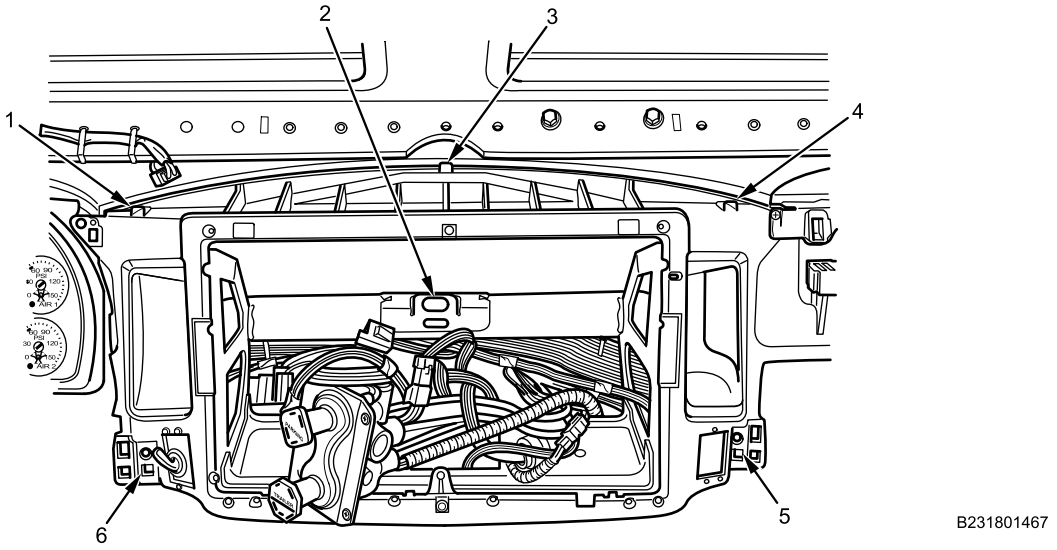

Figure 5. Instrument Panel Center Closeout Alignment Slots.

2. Install bottom of instrument panel center closeout (Figure 6, Item 1) by engaging lower corner clips (Figure 6, Item 2) on instrument panel slot (Figure 6, Item 3).

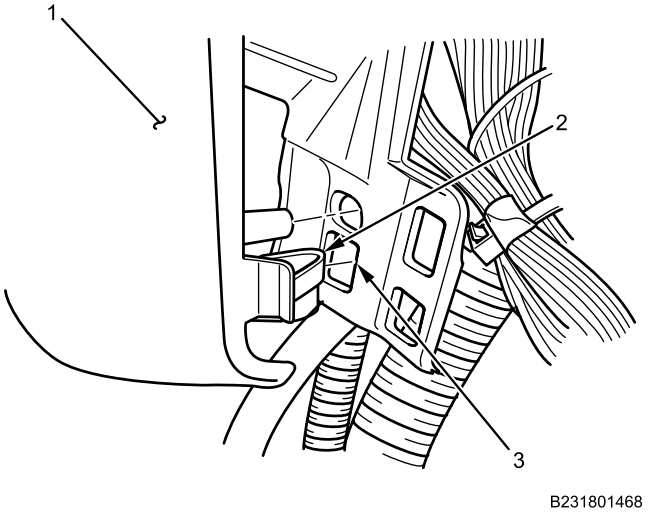

Figure 6. Instrument Panel Center Closeout Installation.

INSTRUMENT PANEL (IP) CENTER CLOSEOUT REMOVAL AND INSTALLATION - (CONTINUED)

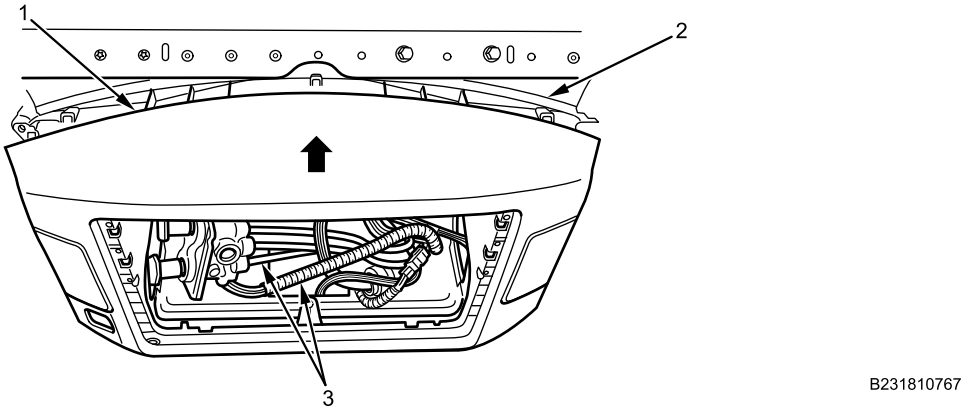

Figure 7. Instrument Panel Center Closeout Installation.

3. Install top of instrument panel center closeout (Figure 7, Item 1) by pushing toward instrument panel (Figure 7, Item 2).
4. Pull out electrical harnesses and air lines (Figure 7, Item 3) from inside instrument panel center closeout.Install engine start switch cover (Figure 8, Item 1) on instrument panel center closeout (Figure 8, Item 2).

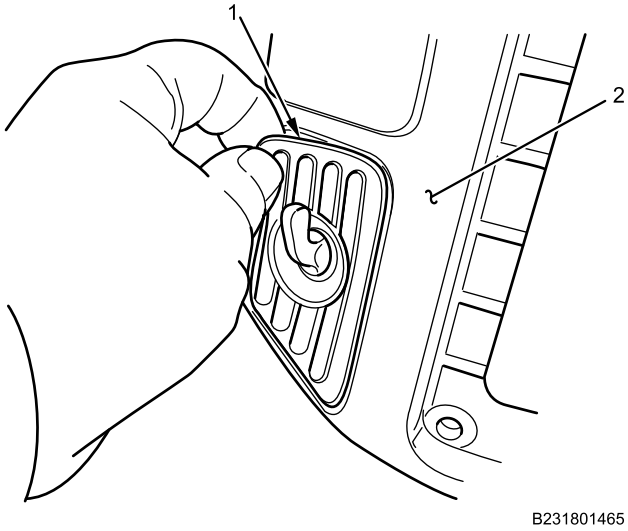

Figure 8. Engine Start Switch Cover.

5. Install instrument panel cluster closeout (Figure 9, Item 1) by pushing toward instrument panel (Figure 9, Item 2).

INSTRUMENT PANEL (IP) CENTER CLOSEOUT REMOVAL AND INSTALLATION - (CONTINUED)

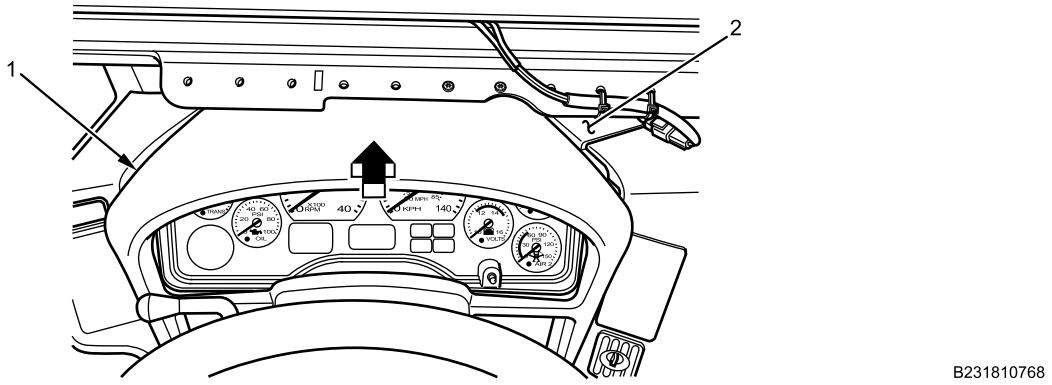

Figure 9. Instrument Panel Cluster Closeout.

6. Install fuse access panel (Figure 10, Item 1) by first engaging lower hooks (Figure 10, Item 4) on instrument panel slots (Figure 10, Item 3).

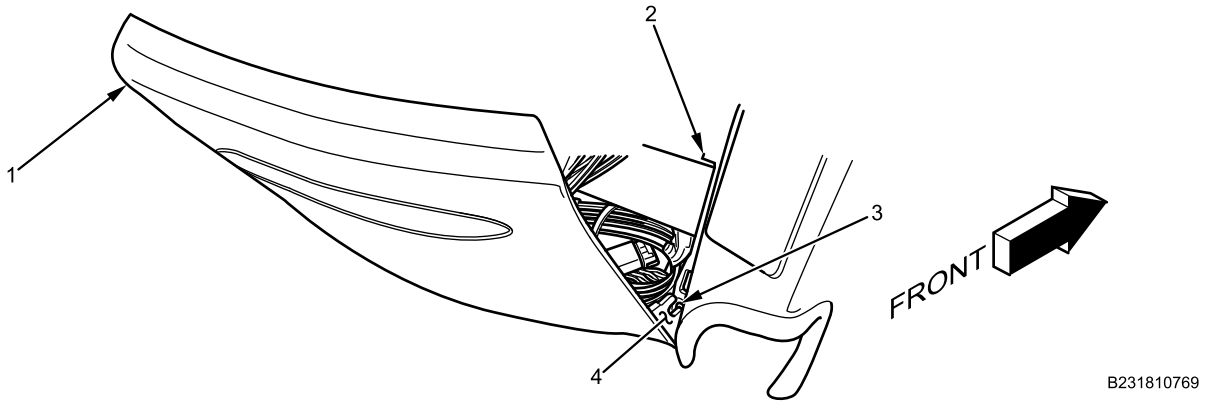

Figure 10. Instrument Panel Right Side Closeout Fuse Access Panel Engagement.

7. Push top of fuse access panel (Figure 10, Item 1) towards instrument panel (Figure 10, Item 2).

END OF TASK

FOLLOW-ON MAINTENANCE

1. Install Instrument panel center trim panel (WP 0581).
2. Turn MAIN POWER switch on (TM 9-2355-106-10).
3. Remove wheel chocks (TM 9-2355-106-10).
4. Test-drive vehicle to verify instrument panel operation (TM 9-2355-106-10).
5. Set transmission in NEUTRAL (N) (TM 9-2355-106-10).
6. Set vehicle parking brake (TM 9-2355-106-10).
7. Turn engine off (TM 9-2355-106-10).
8. Turn MAIN POWER switch off (TM 9-2355-106-10).

END OF TASK

END OF WORK PACKAGE

FIELD MAINTENANCE

INSTRUMENT PANEL (IP) RIGHT SIDE CLOSEOUT REMOVAL AND INSTALLATION

INITIAL SETUP:

Tools and Special Tools
General Mechanic's Tool Kit (GMTK) (WP 0795, Item 37)

References
TM 9-2355-106-10
TM 9-2355-106-23P
WP 0782

Equipment Condition
Parking brake set (TM 9-2355-106-10)
Transmission set in NEUTRAL (N) (TM 9-2355-106-10)
Engine off (TM 9-2355-106-10)
MAIN POWER switch off (TM 9-2355-106-10)
Wheels chocked (TM 9-2355-106-10)

REMOVAL

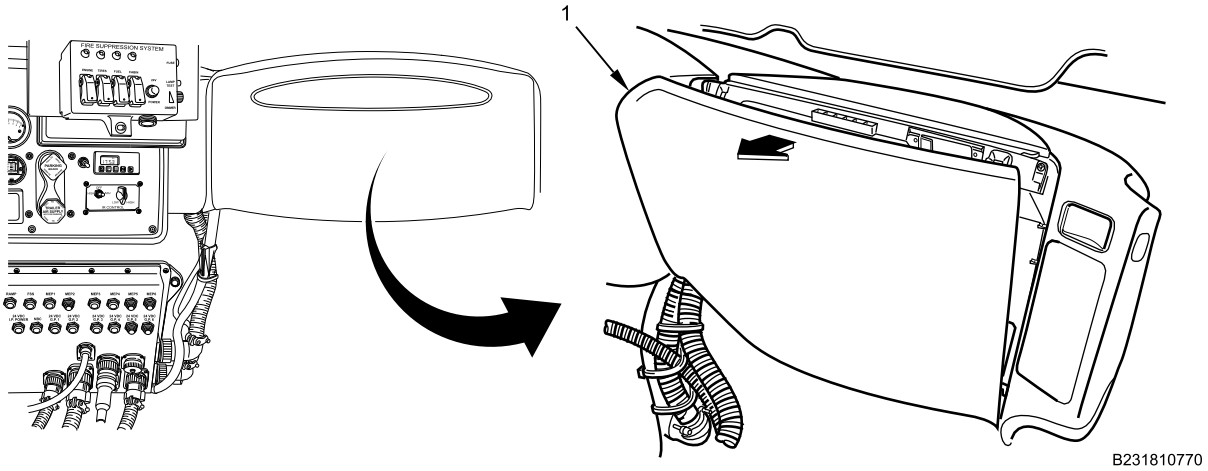

Figure 1. IP Right Side Closeout Fuse Panel.

1. Remove fuse panel (Figure 1, Item 1) by pulling top of panel back and then up.

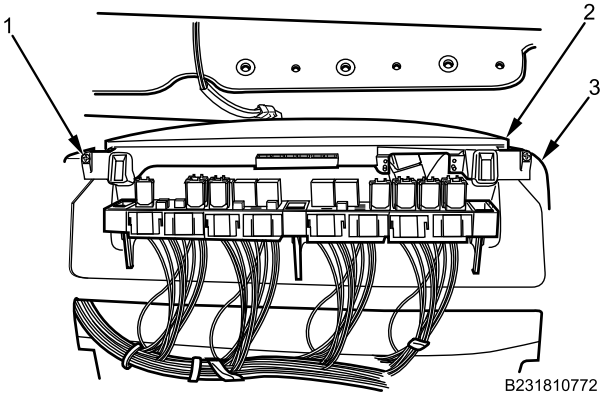

Figure 2. Upper IP Right Side Closeout.

2. Remove two screws (Figure 2, Item 1) from IP (Figure 2, Item 3).
3. Pull out upper IP right side closeout (Figure 2, Item 2).

END OF TASK

INSTRUMENT PANEL (IP) RIGHT SIDE CLOSEOUT REMOVAL AND INSTALLATION - (CONTINUED)

INSTALLATION

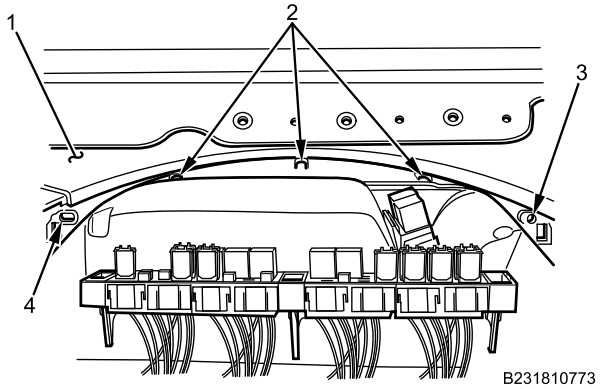

Figure 3. Upper IP Right Side Closeout Engagement.

1. Install upper IP right side closeout in IP (Figure 3, Item 1) by first engaging on three forward clips (Figure 3, Item 2) and then on lower clips (Figure 3, Item 3 and 4).

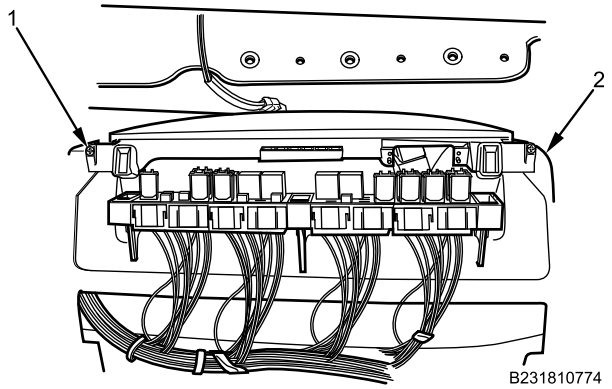

Figure 4. Upper IP Right Side Closeout.

2. Install two screws (Figure 4, Item 1) on IP (Figure 4, Item 2). Tighten screws securely.

INSTRUMENT PANEL (IP) RIGHT SIDE CLOSEOUT REMOVAL AND INSTALLATION - (CONTINUED)

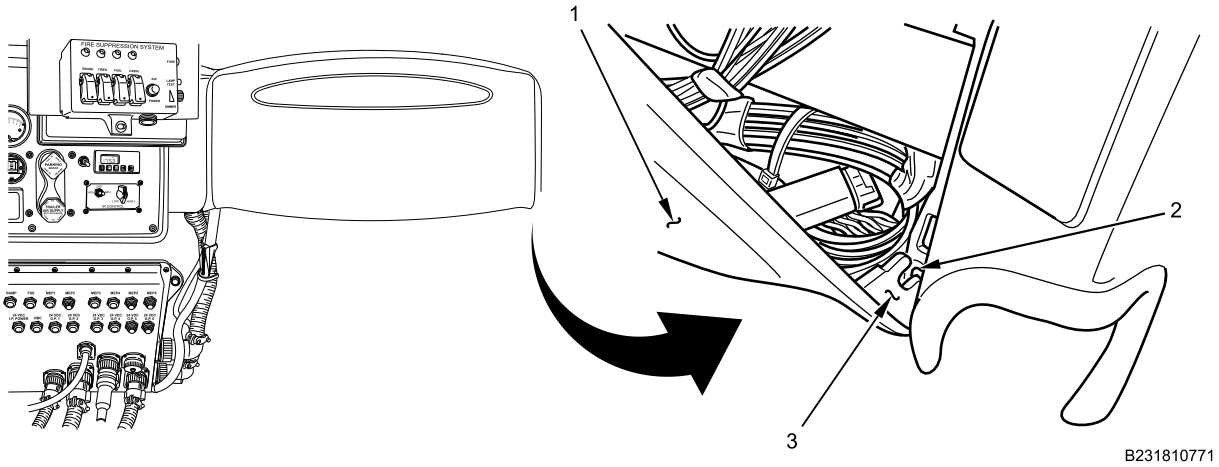

Figure 5. IP Right Side Closeout Fuse Panel Engagement.

3. Install fuse panel (Figure 5, Item 1) by first engaging fuse panel lower hooks (Figure 5, Item 3) on IP slots (Figure 5, Item 2).
4. Push top of fuse panel (Figure 5, Item 1) forward to close fuse panel.

END OF TASK

FOLLOW-ON MAINTENANCE

1. Remove wheel chocks (TM 9-2355-106-10).

END OF TASK

END OF WORK PACKAGE

FIELD MAINTENANCE

INSTRUMENT PANEL (IP) CENTER TRIM PANEL REMOVAL AND INSTALLATION

INITIAL SETUP:

Tools and Special Tools
General Mechanic's Tool Kit (GMTK) (WP 0795, Item 37)
Screwdriver, torx, T27, 4-inch (WP 0795, Item 89)

Materials/Parts
Grease (WP 0794, Item 22)
Wire Tags (WP 0794, Item 33)

References
TM 9-2355-106-10
TM 9-2355-106-23P
WP 0782

Equipment Condition
Parking brake set (TM 9-2355-106-10)
Transmission set in NEUTRAL (N) (TM 9-2355-106-10)
Engine off (TM 9-2355-106-10)
MAIN POWER switch off (TM 9-2355-106-10)
Wheels chocked (TM 9-2355-106-10)
Fire Suppression System (FSS) control unit bracket removed (WP 0738)

REMOVAL

WARNING

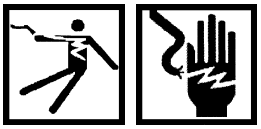

Use extreme caution when testing or working on or around electrical circuits. Always assume that electrical circuits are live. Electrical shock can occur upon contact with voltage high enough to cause current flow through muscles or nerves. On Direct Current (DC) systems, generally 1 milliamp of current can be felt, 5 milliamps can cause severe pain, 15 milliamps can cause loss of muscle control, and 70 milliamps can be fatal. Wear protective clothing; ensure skin, clothing, and surrounding areas are dry; do not wear jewelry; and touch only the insulated, nonmetallic parts of electrical components and testing equipment. To prevent electrical arcing, avoid shorting electrical test probes and jumper wires. Electrical arcing can cause bright flashes of light, capable of causing temporary blindness. If electrical injury occurs, immediately shut off power supply and seek medical assistance. Failure to comply may result in serious injury or death to personnel.

NOTE

Label all wires before removal.

INSTRUMENT PANEL (IP) CENTER TRIM PANEL REMOVAL AND INSTALLATION - (CONTINUED)

1. Push in on storage bin retainers (Figure 1, Item 4) and pull storage bin (Figure 1, Item 3) from IP center trim panel (Figure 1, Item 2).

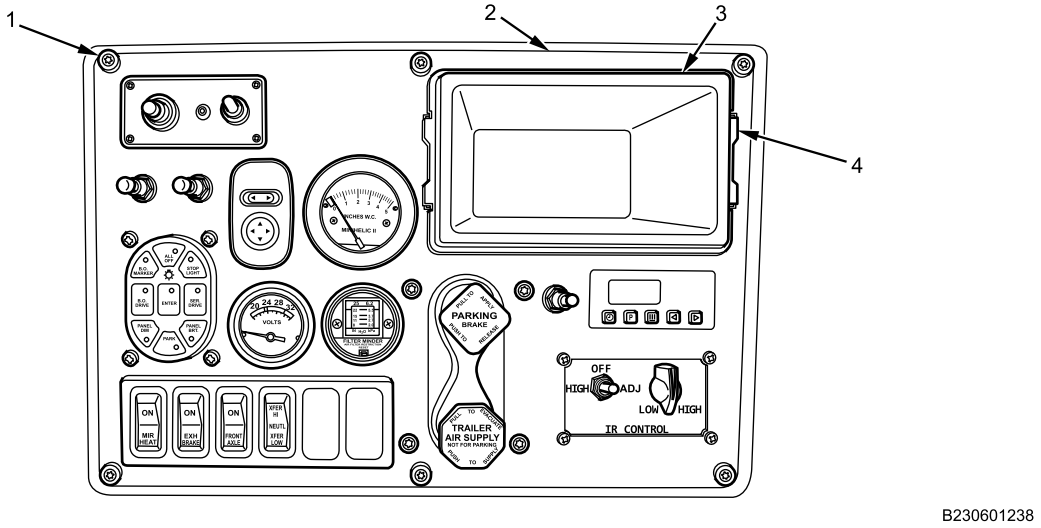

Figure 1. IP Center Trim Panel.

2. Remove six screws (Figure 1, Item 1) securing IP center trim panel (Figure 1, Item 2) to IP.
3. Remove four torx screws (Figure 2, Item 1) from hand brake control valve (Figure 2, Item 2).

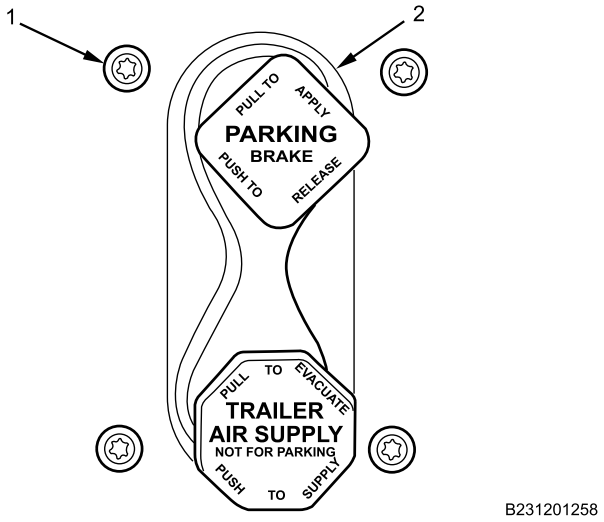

Figure 2. Hand Brake Control.

4. Pull IP center trim panel rearward in vehicle to gain access to switch and gauge connectors.
5. Disconnect vacuum lines and electrical connections from switches and gauges.

INSTRUMENT PANEL (IP) CENTER TRIM PANEL REMOVAL AND INSTALLATION - (CONTINUED)

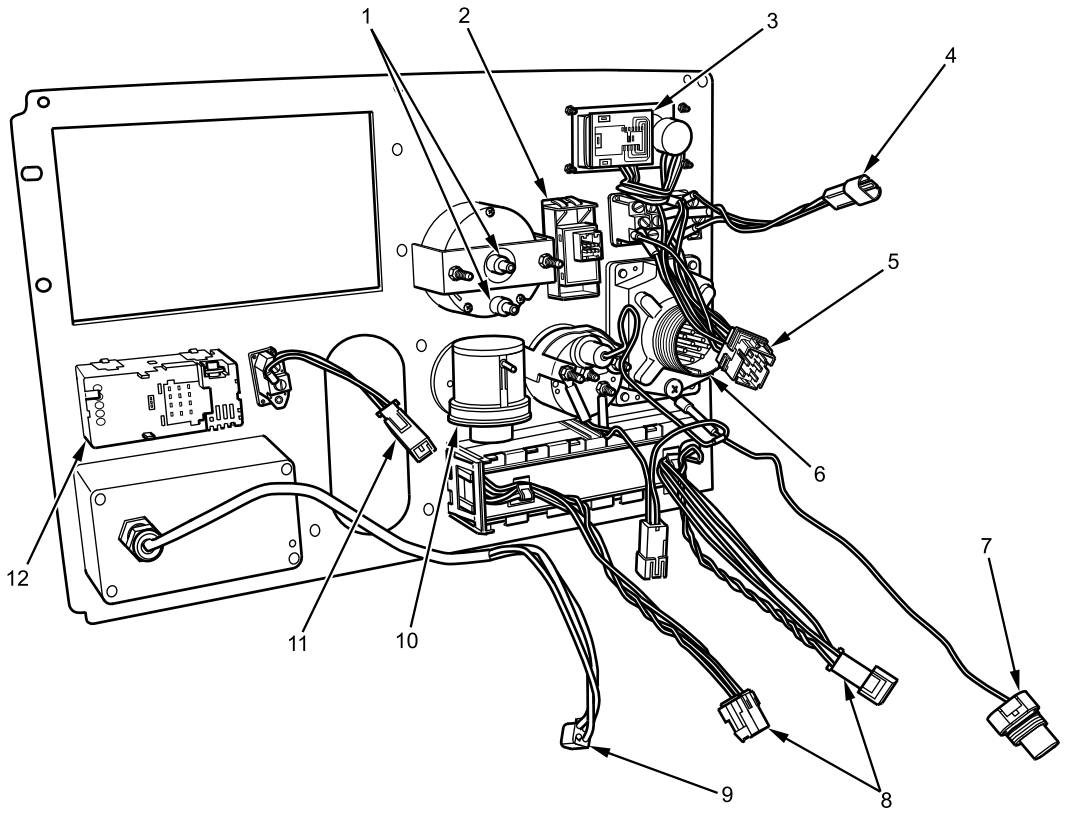

LEGEND

1 NUCLEAR CHEMICAL AND BIOLOGICAL (NBC) FILTER GAUGE
2 POWER MIRROR SWITCH
3 SPOTLIGHT SWITCH
4 CREW LIGHT SWITCH
5 RAMP SWITCH
6 MASTER VEHICLE LIGHT SWITCH (MVLS)
7 MLVS GROUND
8 ROCKER SWITCH PANEL CONNECTORS
9 INFRA RED (IR) SWITCH
10 AIR FILTER RESTRICTION GAUGE
11 FUEL FIRED HEATER TIMER CONTROL SWITCH
12 FUEL FIRED HEATER TIMER CONTROL

B231801264

Figure 3. IP Center Trim Panel Wiring.

INSTRUMENT PANEL (IP) CENTER TRIM PANEL REMOVAL AND INSTALLATION - (CONTINUED)

6. Remove IP center trim panel from vehicle.

END OF TASK

INSTALLATION

WARNING

Dielectric grease is harmful to skin and eyes. If grease contacts eyes, rinse thoroughly and contact physician if irritation persists. If skin is contacted, wash thoroughly with soap and water. Failure to comply may result in serious injury to personnel.

NOTE

Apply dielectric grease to all electrical connections.

1. Position IP center trim to opening in IP.

NOTE

Only one rocker switch panel connector is used.

2. Connect vacuum lines and electrical connections to switches and gauges. Use legend to identify switch, gauge and connector locations.

INSTRUMENT PANEL (IP) CENTER TRIM PANEL REMOVAL AND INSTALLATION - (CONTINUED)

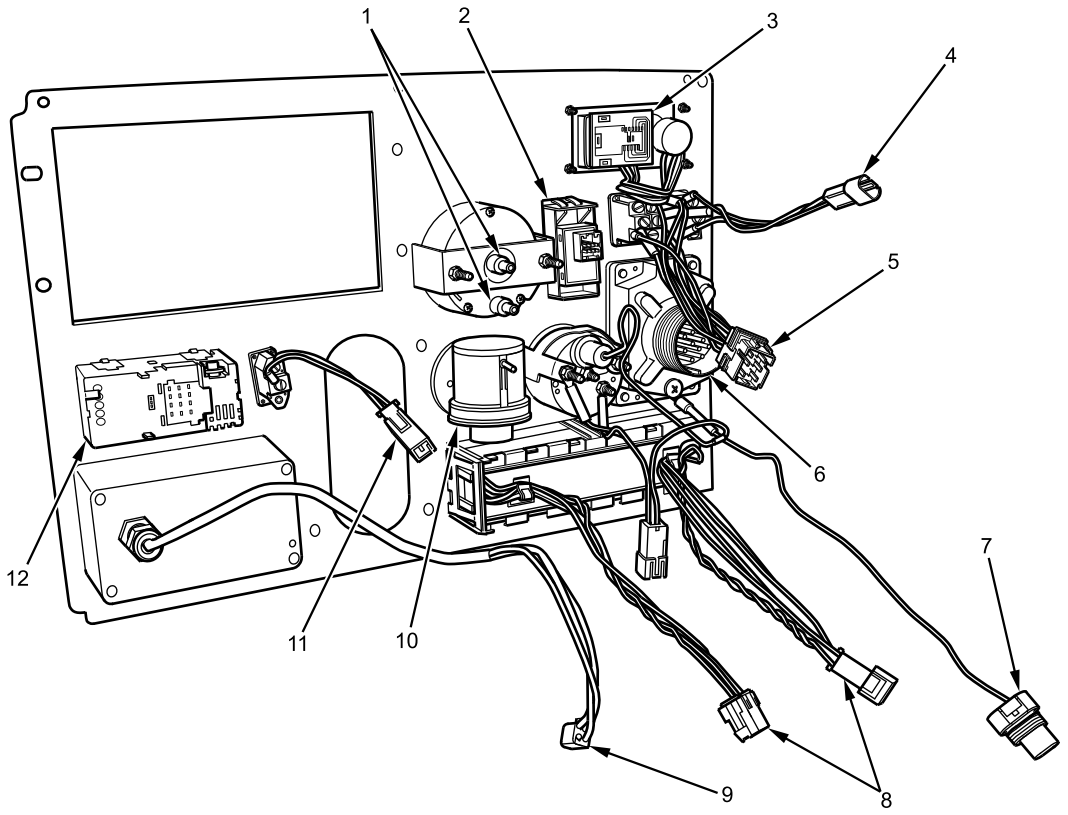

LEGEND

1 NUCLEAR CHEMICAL AND BIOLOGICAL (NBC) FILTER GAUGE
2 POWER MIRROR SWITCH
3 SPOTLIGHT SWITCH
4 CREW LIGHT SWITCH
5 RAMP SWITCH
6 MASTER VEHICLE LIGHT SWITCH (MVLS)
7 MLVS GROUND
8 ROCKER SWITCH PANEL CONNECTORS
9 INFRA RED (IR) SWITCH
10 AIR FILTER RESTRICTION GAUGE
11 FUEL FIRED HEATER TIMER CONTROL SWITCH
12 FUEL FIRED HEATER TIMER CONTROL

B231801264

Figure 4. IP Center Trim Panel Wiring.

INSTRUMENT PANEL (IP) CENTER TRIM PANEL REMOVAL AND INSTALLATION - (CONTINUED)

3. Install four torx screws (Figure 5, Item 1) on hand brake control valve (Figure 5, Item 2).

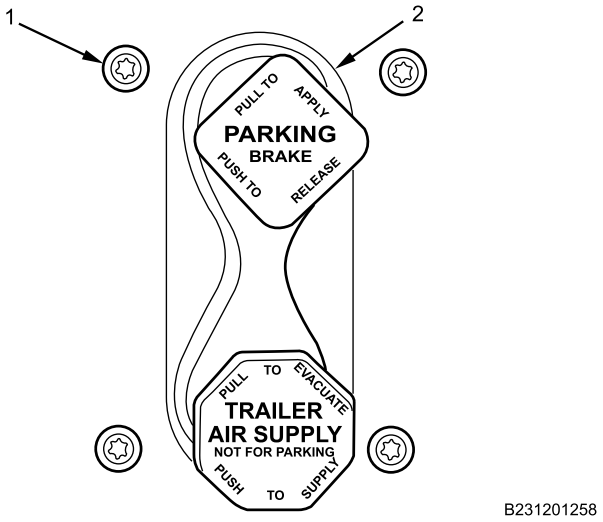

Figure 5. Hand Brake Control.

4. Align IP center trim panel (Figure 6, Item 2) to IP opening.

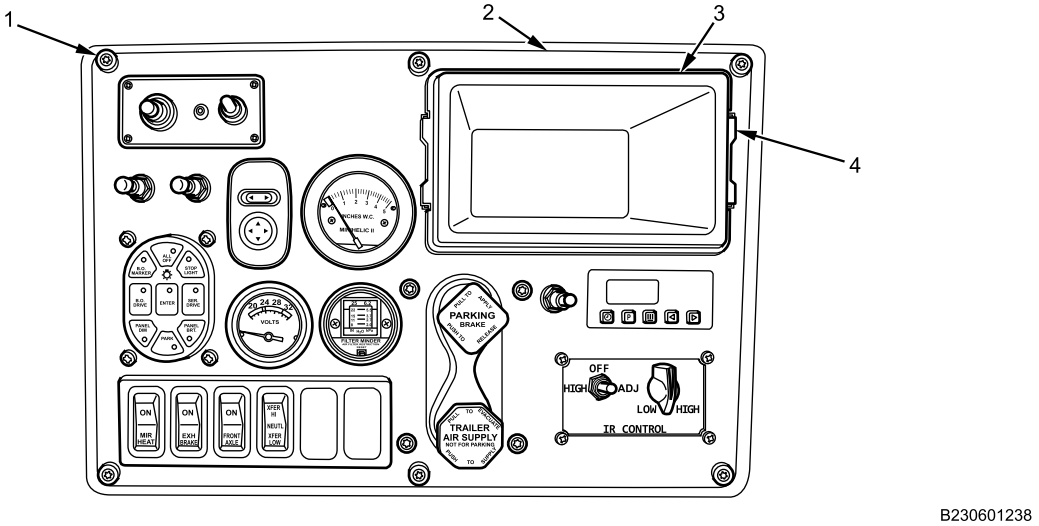

Figure 6. IP Center Trim Panel.

5. Install six screws (Figure 6, Item 1) securing IP center trim panel (Figure 6, Item 2) to IP.
6. Install storage bin (Figure 6, Item 3) in IP opening and push forward to engage retainers (Figure 6, Item 4).

END OF TASK

FOLLOW-ON MAINTENANCE

1. Install Fire Suppression System (FSS) control unit bracket (WP 0738).
2. Turn MAIN POWER switch on (TM 9-2355-106-10).
3. Verify IP switch and gauge operation (TM 9-2355-106-10).
4. Turn MAIN POWER switch off (TM 9-2355-106-10).

INSTRUMENT PANEL (IP) CENTER TRIM PANEL REMOVAL AND INSTALLATION - (CONTINUED)

5. Remove wheel chocks (TM 9-2355-106-10).

END OF TASK

END OF WORK PACKAGE

FIELD MAINTENANCE

NUCLEAR, BIOLOGICAL, AND CHEMICAL (NBC) GAUGE REMOVAL AND INSTALLATION

INITIAL SETUP:

Tools and Special Tools
General Mechanic's Tool Kit (GMTK) (WP 0795, Item 37)

References
TM 9-2355-106-10
TM 9-2355-106-23P
WP 0786
WP 0782

Equipment Condition
Parking brake set (TM 9-2355-106-10)
Transmission set in NEUTRAL (N) (TM 9-2355-106-10)
Engine off (TM 9-2355-106-10)
MAIN POWER switch off (TM 9-2355-106-10)
Wheels chocked (TM 9-2355-106-10)
Instrument Panel (IP) storage bin removed (WP 0563)

REMOVAL

NOTE

There are two barbed fittings on rear of NBC gauge. Only one fitting is used. Note hose position to aid installation.

1. Remove hose (Figure 1, Item 2) from fitting at rear of NBC gauge (Figure 1, Item 1).

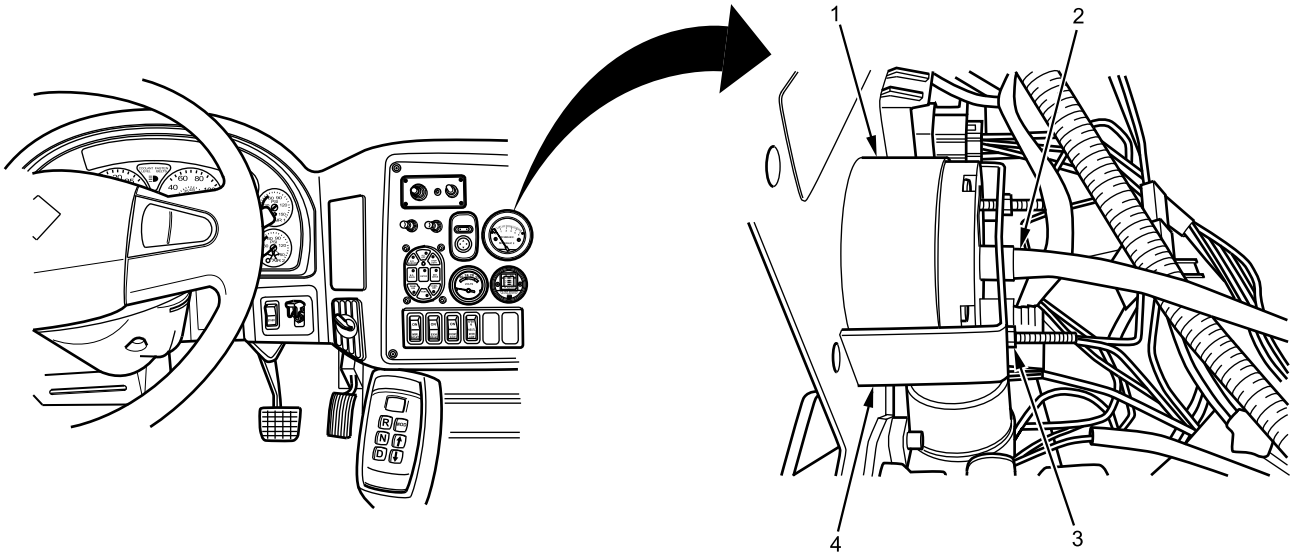

Figure 1. NBC Gauge.

2. Remove two nuts (Figure 1, Item 3) at rear of gauge (Figure 1, Item 1).
3. Remove retainer (Figure 1, Item 4).

NUCLEAR, BIOLOGICAL, AND CHEMICAL (NBC) GAUGE REMOVAL AND INSTALLATION - (CONTINUED)

4. Remove NBC gauge (Figure 2, Item 1) from IP center trim panel (Figure 2, Item 2).

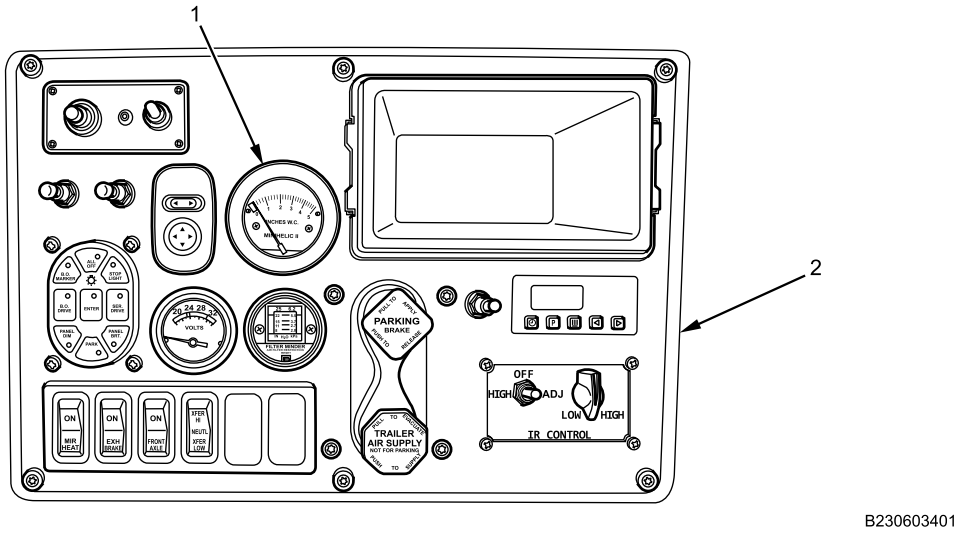

Figure 2. NBC Gauge Front.

END OF TASK

INSTALLATION

1. Position NBC gauge (Figure 3, Item 1) on IP center trim panel (Figure 3, Item 2).

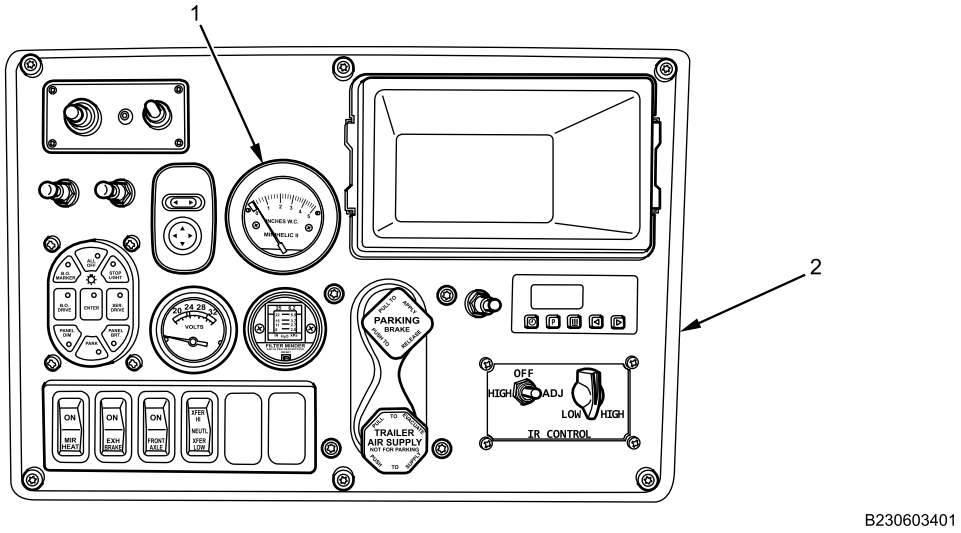

Figure 3. NBC Gauge Front.

2. Install retainer (Figure 4, Item 4) on rear of gauge (Figure 4, Item 1) with two nuts (Figure 4, Item 3) and tighten securely.

NUCLEAR, BIOLOGICAL, AND CHEMICAL (NBC) GAUGE REMOVAL AND INSTALLATION - (CONTINUED)

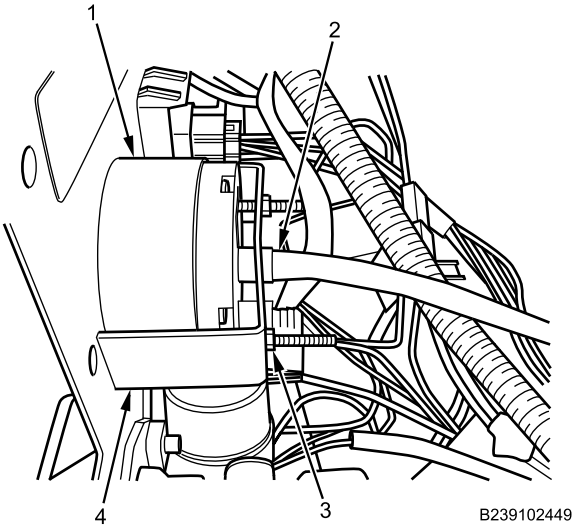

Figure 4. NBC Gauge Hose.

3. Install hose (Figure 4, Item 2) on NBC gauge (Figure 4, Item 1) in position noted during removal.

END OF TASK

FOLLOW-ON MAINTENANCE

1. Install IP storage bin (WP 0563).
2. Remove wheel chocks (TM 9-2355-106-10).

END OF TASK

END OF WORK PACKAGE

FIELD MAINTENANCE

CABIN ROOF MOLDING REMOVAL AND INSTALLATION

INITIAL SETUP:

Tools and Special Tools
General Mechanic's Tool Kit (GMTK) (WP 0795, Item 37)

Materials/Parts
Fastener - (12) (WP 0794, Item 17)

References
TM 9-2355-106-10
TM 9-2355-106-23P
WP 0782

Equipment Condition
Parking brake set (TM 9-2355-106-10)
Transmission set in NEUTRAL (N) (TM 9-2355-106-10)
Rear door/ramp open (TM 9-2355-106-10)
Engine off (TM 9-2355-106-10)
MAIN POWER switch off (TM 9-2355-106-10)
Wheels chocked (TM 9-2355-106-10)

REMOVAL

WARNING

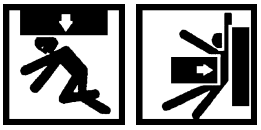

Ensure no one is behind vehicle when lowering rear door/ramp. Use extreme caution when using emergency rear door/ramp release, to ensure no one is struck by door as it falls open. Sound horn before lowering door/ramp. Keep arms and legs clear of rear door/ramp when closing. Do not operate rear door/ramp when vehicle is in motion. Failure to comply may result in serious injury or death to personnel.

NOTE

Right side shown, left side similar.

1. Remove three fasteners (Figure 1, Item 1) from windshield molding (Figure 1, Item 2). Remove molding and discard fasteners (Figure 1, Item 1).

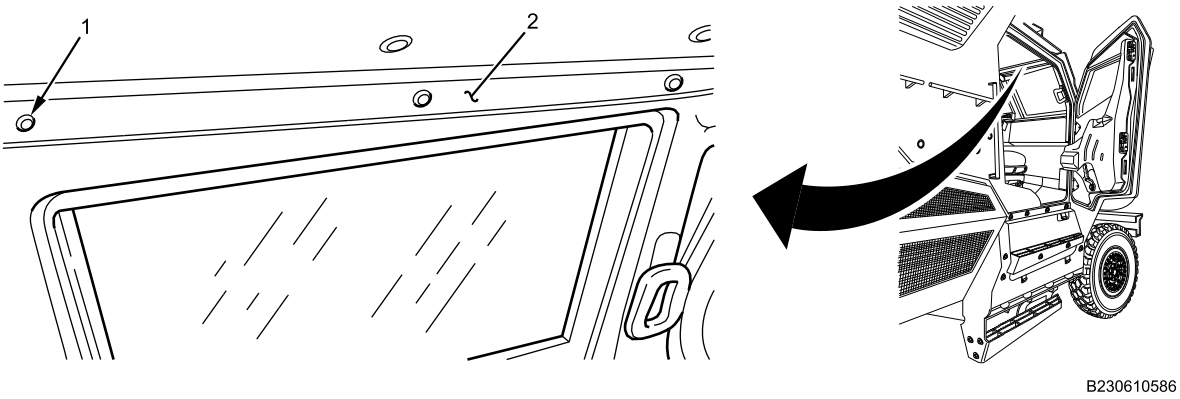

Figure 1. Right Front Windshield Molding.

CABIN ROOF MOLDING REMOVAL AND INSTALLATION - (CONTINUED)

2. Remove three fasteners (Figure 2, Item 1) from front door molding (Figure 2, Item 2). Remove molding and discard fasteners (Figure 2, Item 1).

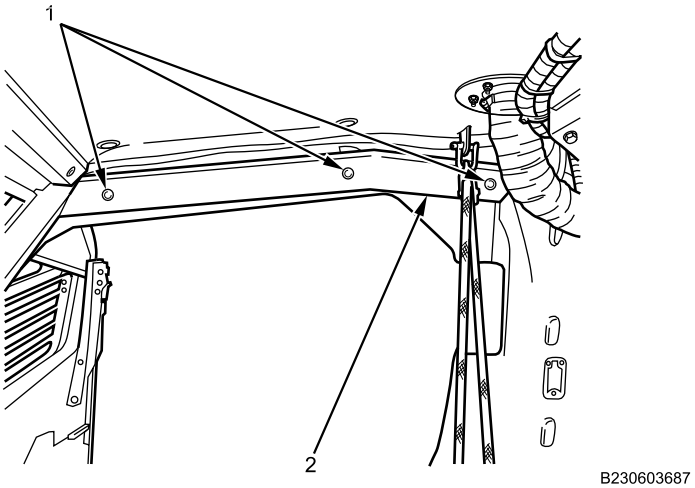

Figure 2. Right Front Door Molding.

3. Remove three bolts (Figure 3, Item 1) and three washers from front cabin molding (Figure 3, Item 2). Remove molding.

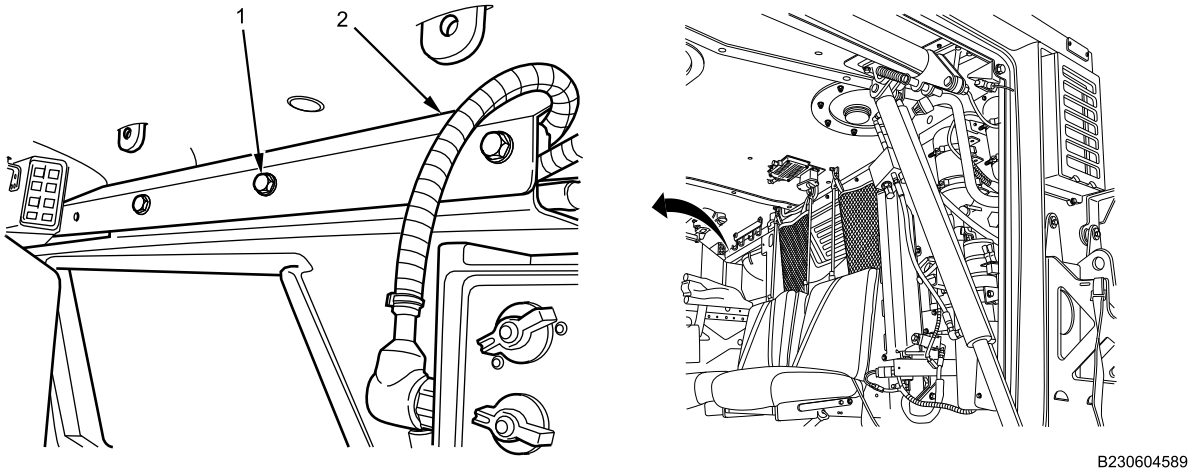

Figure 3. Right Front Cabin Molding.

CABIN ROOF MOLDING REMOVAL AND INSTALLATION - (CONTINUED)

4. Remove five bolts (Figure 4, Item 1) and washers (one hidden behind strap), from center molding (Figure 4, Item 2). Remove molding.

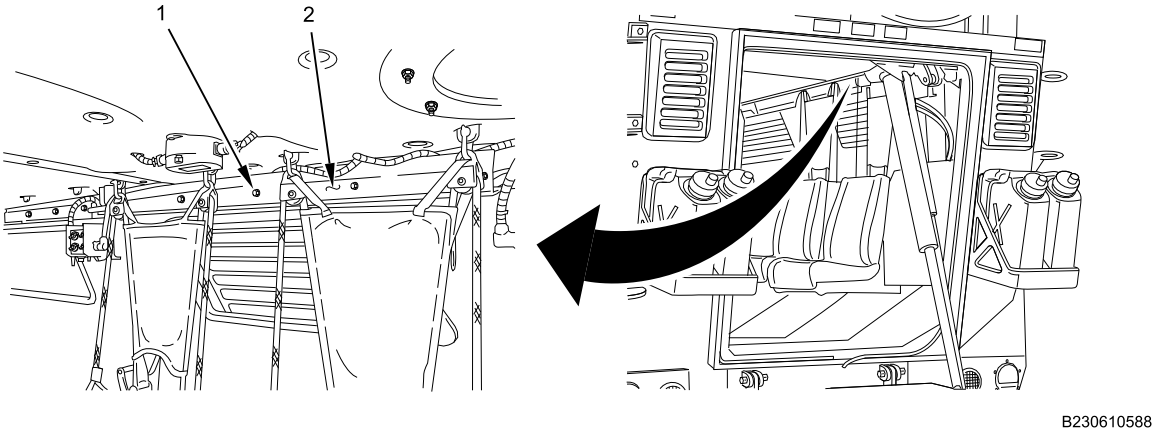

Figure 4. Right Center Cabin Molding.

5. Remove three bolts (Figure 5, Item 1) and washers from rear cabin molding (Figure 5, Item 2). Remove molding.

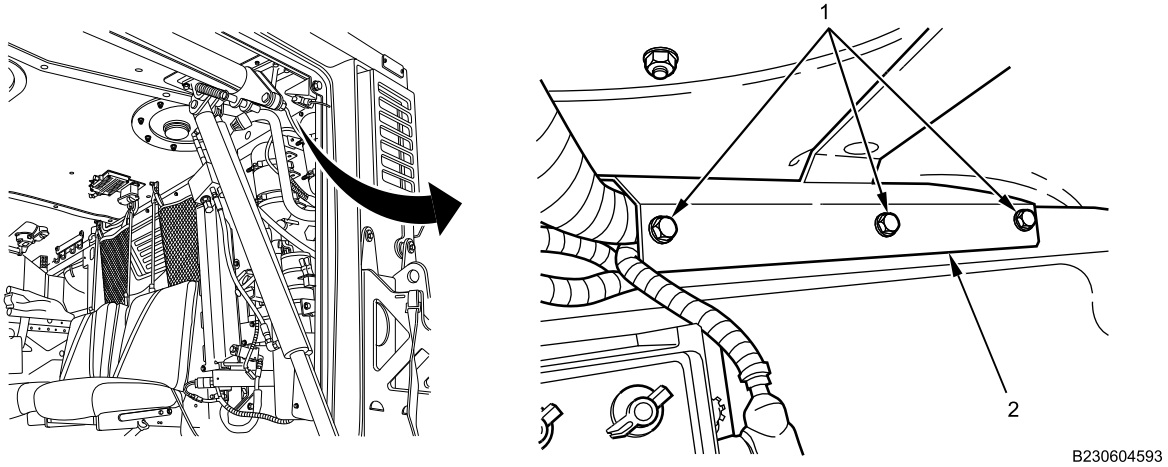

Figure 5. Right Rear Cabin Molding.

CABIN ROOF MOLDING REMOVAL AND INSTALLATION - (CONTINUED)

6. Remove bolts (Figure 6, Item 1) from rear cabin molding (Figure 6, Item 2). Remove molding.

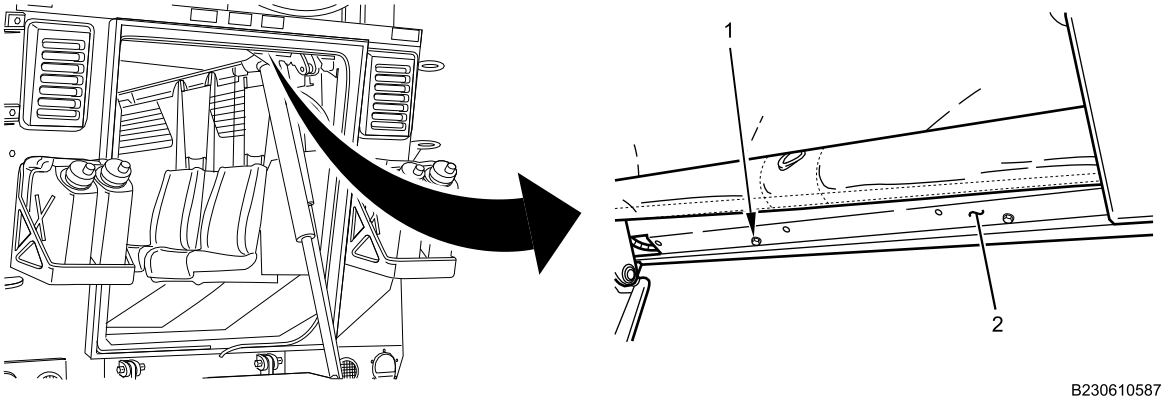

Figure 6. Rear Cabin Molding.

END OF TASK

INSTALLATION

1. Install bolts (Figure 7, Item 1) on rear cabin molding (Figure 7, Item 2). Tighten bolts securely.

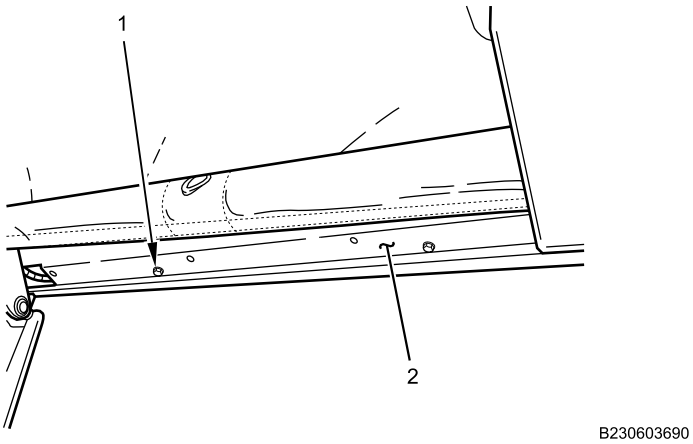

Figure 7. Rear Cabin Molding.

CABIN ROOF MOLDING REMOVAL AND INSTALLATION - (CONTINUED)

2. Install three bolts and washers (Figure 8, Item 1) on rear cabin molding (Figure 8, Item 2). Tighten bolts securely.

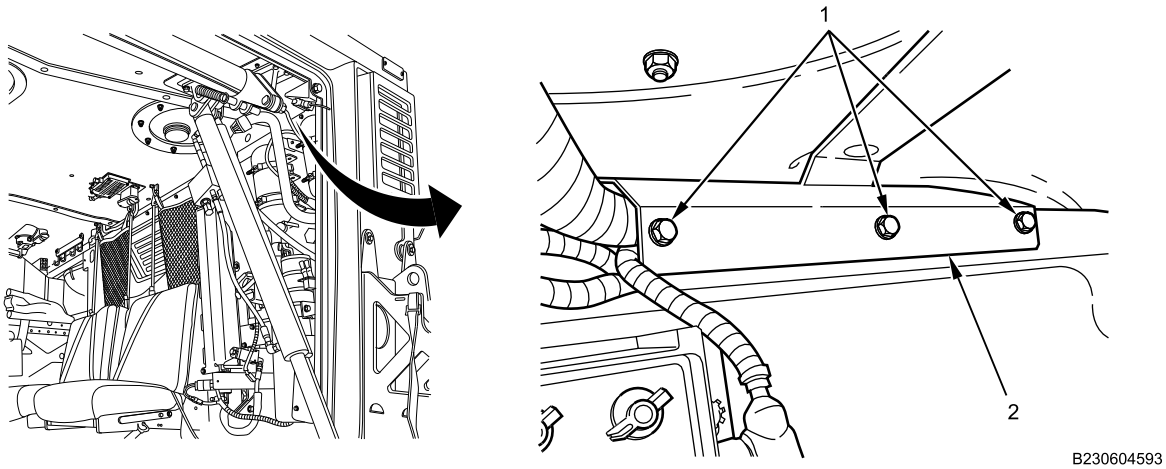

Figure 8. Right Rear Cabin Molding.

3. Install five bolts (Figure 9, Item 1) and washers (one hidden behind strap), on center cabin molding (Figure 9, Item 2). Tighten bolts securely.

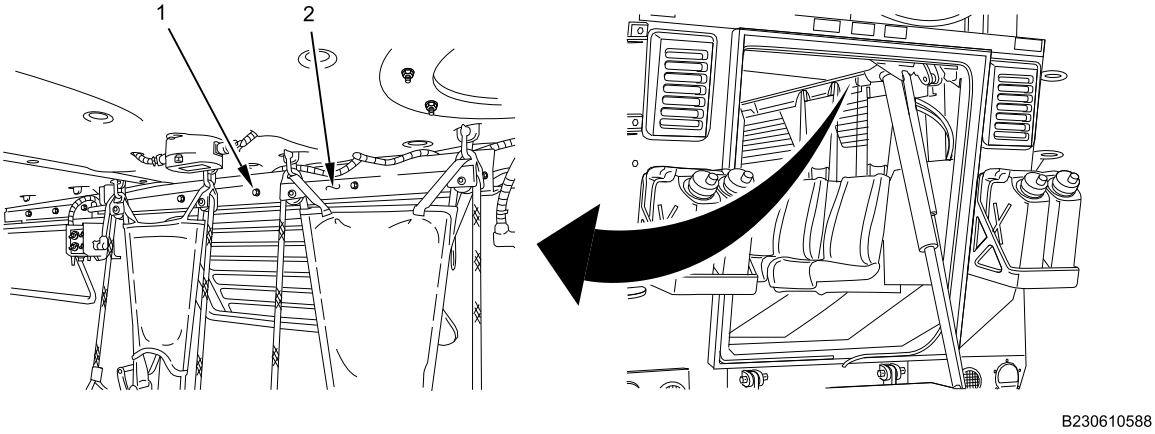

Figure 9. Right Center Cabin Molding.

CABIN ROOF MOLDING REMOVAL AND INSTALLATION - (CONTINUED)

4. Install front cabin molding (Figure 10, Item 2) with three bolts (Figure 10, Item 1) and washers. Tighten bolts securely.

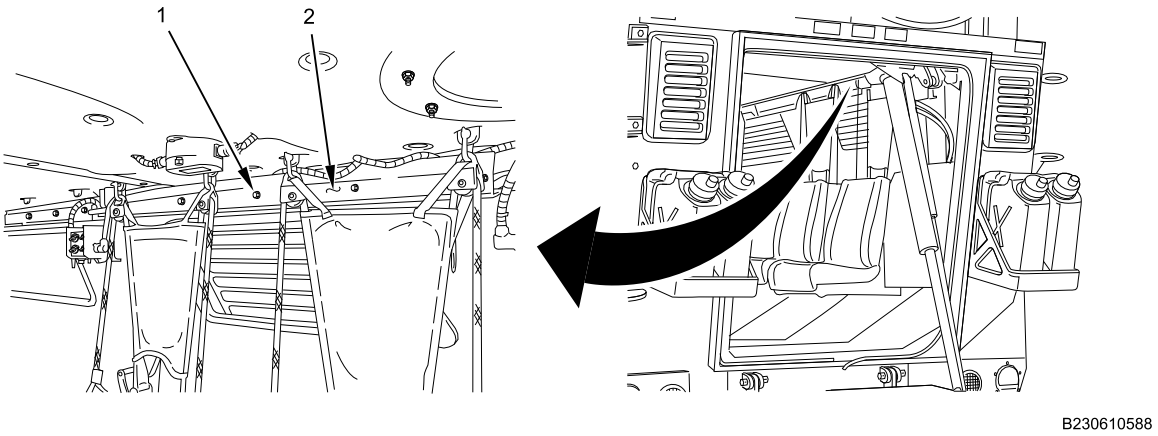

Figure 10. Right Front Cabin Molding.

5. Install front door molding (Figure 11, Item 2) with three new fasteners (Figure 11, Item 1).

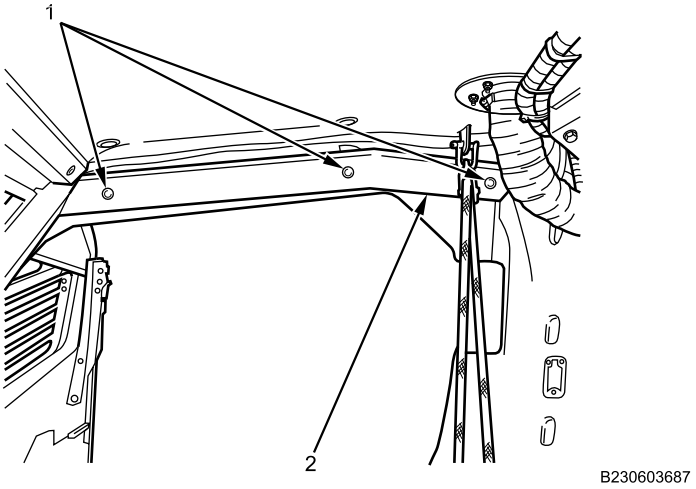

Figure 11. Right Front Door Molding.

CABIN ROOF MOLDING REMOVAL AND INSTALLATION - (CONTINUED)

6. Install windshield molding (Figure 12, Item 2) with three new fasteners (Figure 12, Item 1).

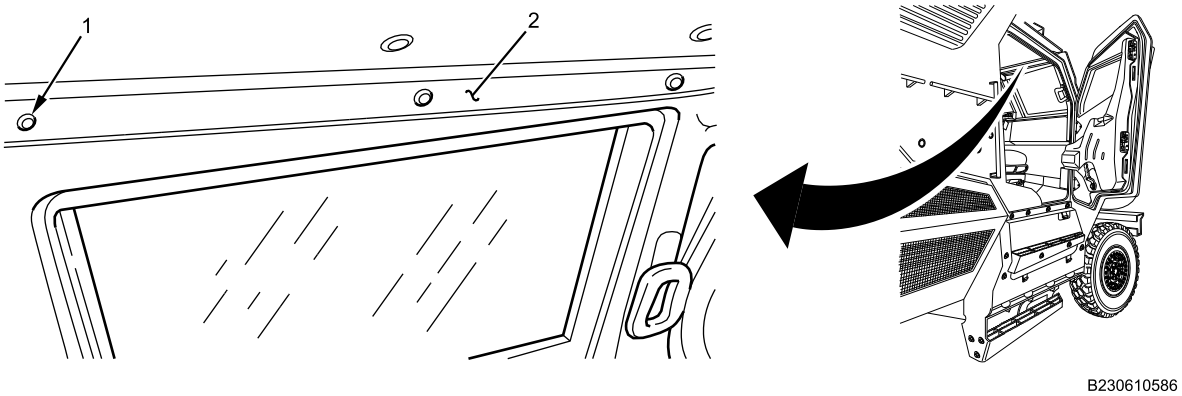

Figure 12. Right Front Windshield Molding.

END OF TASK

FOLLOW-ON MAINTENANCE

1. Turn MAIN POWER switch on (TM 9-2355-106-10).
2. Close rear door/ramp (TM 9-2355-106-10).
3. Turn MAIN POWER switch off (TM 9-2355-106-10).
4. Remove wheel chocks (TM 9-2355-106-10).

END OF TASK

END OF WORK PACKAGE

FIELD MAINTENANCE

ROOF ARMOR FRONT PANEL REMOVAL AND INSTALLATION

INITIAL SETUP:

Tools and Special Tools
General Mechanic's Tool Kit (GMTK) (WP 0795, Item 37)
Wrench, torque, 20-100 lb-ft, 3/8-inch drive (WP 0795, Item 141)

Materials/Parts
Compound (WP 0794, Item 13)
Goggles, industrial (WP 0794, Item 20)
Faceshield, industrial (WP 0794, Item 16)
Gloves (WP 0794, Item 18)
Gloves (WP 0794, Item 19)
Sealing compound (WP 0794, Item 43)
Dispenser, sealant (WP 0794, Item 14)

Personnel Required
Maintainer - (2)

References
TM 9-2355-106-10
TM 9-2355-106-23P
WP 0782

Equipment Condition
Parking brake set (TM 9-2355-106-10)
Transmission set in NEUTRAL (N) (TM 9-2355-106-10)
Engine off (TM 9-2355-106-10)
MAIN POWER switch off (TM 9-2355-106-10)
Wheels chocked (TM 9-2355-106-10)

WARNING

Armor parts are heavy. Use care when removing or installing. Do not attempt to lift without an assistant and lifting device. Wear gloves. Failure to comply may result in serious injury or death to personnel.

NOTE

Approximate weight of each panel is 45 lbs (20.4 kgs).

This procedure is the same for right front roof armor. Left side procedure shown.

ROOF ARMOR FRONT PANEL REMOVAL AND INSTALLATION - (CONTINUED)

REMOVAL

1. With assistant, remove five bolts and washers (Figure 1, Item 2) from roof armor front panel (Figure 1, Item 1). Remove armor panel (Figure 1, Item 1).

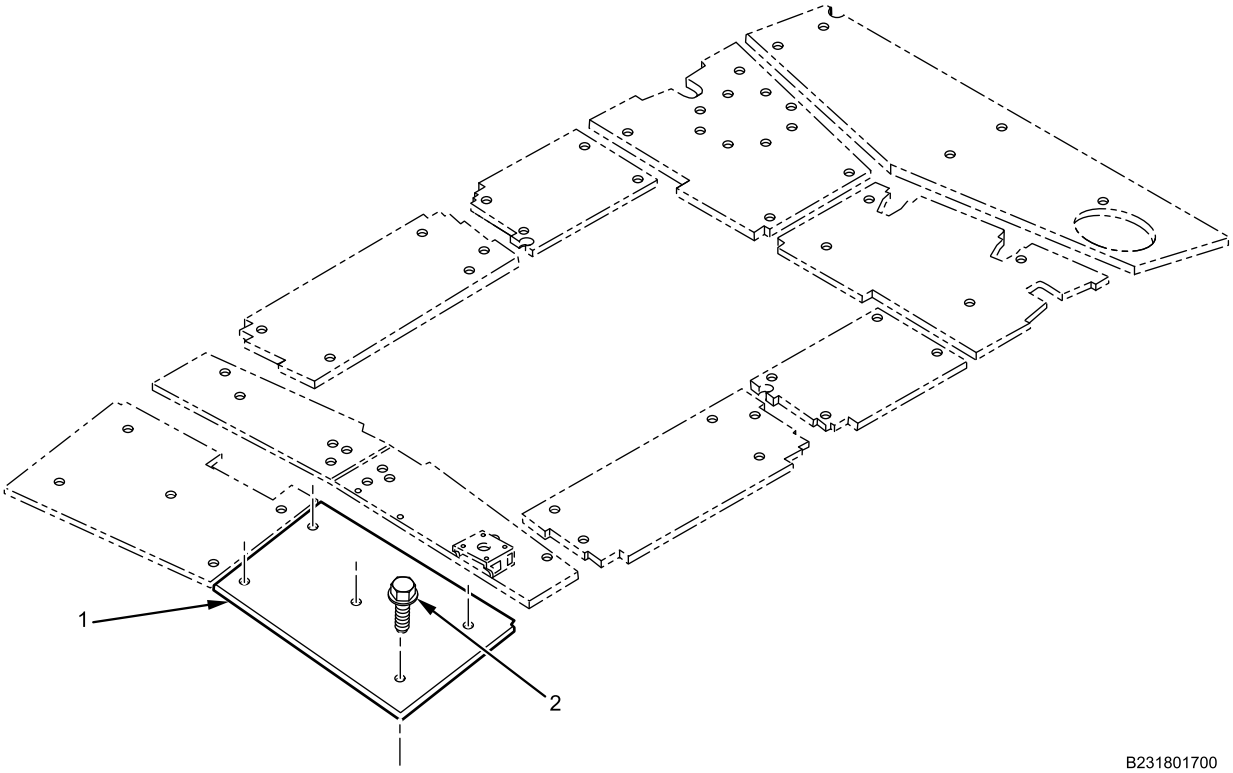

Figure 1. Roof Armor Front Panel.

END OF TASK

INSTALLATION

WARNING

Corrosion preventive compound is toxic. Use only in well-ventilated area. Do not get in eyes; wear chemical safety goggles and full-face shield when using. Avoid contact with skin and wear rubber or plastic, solvent-resistant gloves. In case of contact, remove contaminated clothing and immediately wash area with soap and water. If compound contacts eyes, flush eyes with large amounts of water for at least 15 minutes and get immediate medical attention. If swallowed, do not induce vomiting; contact a physician immediately. Failure to comply may result in serious injury or death to personnel.

1. Apply corrosion preventive compound on roof armor front panel mounting bolt threads (Figure 2, Item 2).

ROOF ARMOR FRONT PANEL REMOVAL AND INSTALLATION - (CONTINUED)

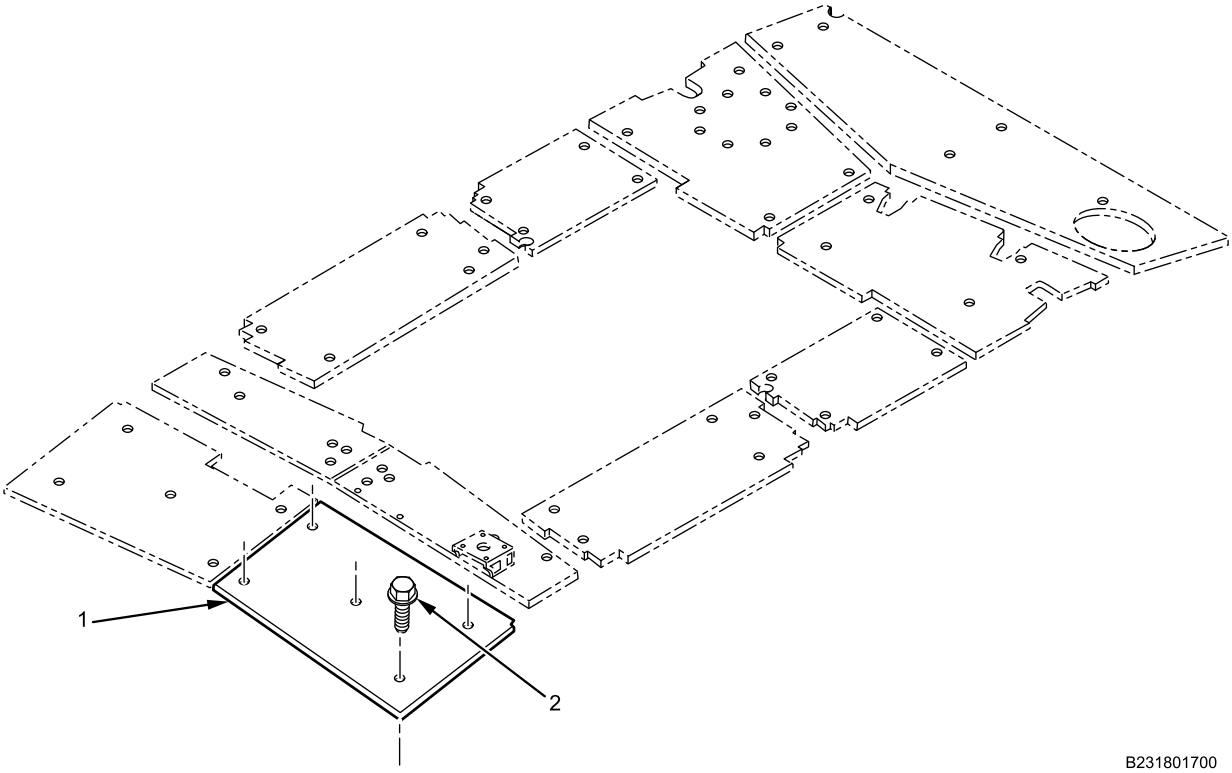

Figure 2. Roof Armor Front Panel.

2. With assistant, install roof armor front panel (Figure 2, Item 1) with five bolts and washers (Figure 2, Item 2). Torque bolts to 34-38 lb-ft (46-51 N•m).

END OF TASK

FOLLOW-ON MAINTENANCE

1. Remove wheel chocks (TM 9-2355-106-10).

END OF TASK

END OF WORK PACKAGE

FIELD MAINTENANCE

ROOF ARMOR FRONT SPOILER REMOVAL AND INSTALLATION

INITIAL SETUP:

Tools and Special Tools
General Mechanic's Tool Kit (GMTK) (WP 0795, Item 37)
Wrench, torque, 20-100 lb-ft, 3/8-inch drive (WP 0795, Item 141)

Materials/Parts
Goggles, industrial (WP 0794, Item 20)
Face shield, industrial (WP 0794, Item 16)
Gloves (WP 0794, Item 19)
Gloves (WP 0794, Item 18)
Compound (WP 0794, Item 13)

Personnel Required
Maintainer - (2)

References
TM 9-2355-106-10
TM 9-2355-106-23P
WP 0782

Equipment Condition
Parking brake set (TM 9-2355-106-10)
Transmission set in NEUTRAL (N) (TM 9-2355-106-10)
Engine off (TM 9-2355-106-10)
MAIN POWER switch off (TM 9-2355-106-10)
Wheels chocked (TM 9-2355-106-10)
Roof spotlight removed (WP 0363)
Outside gunner protection riser removed (WP 0702)

WARNING

Armor parts are heavy. Use care when removing or installing. Do not attempt to lift without an assistant or lifting device. Wear gloves. Failure to comply may result in serious injury or death to personnel.

NOTE

Roof armor front spoiler weighs approximately 85 lbs.

ROOF ARMOR FRONT SPOILER REMOVAL AND INSTALLATION - (CONTINUED)

REMOVAL

1. With assistant, remove six bolts (Figure 1, Item 2), flat washers (Figure 1, Item 3), and roof armor front spoiler (Figure 1, Item 1).

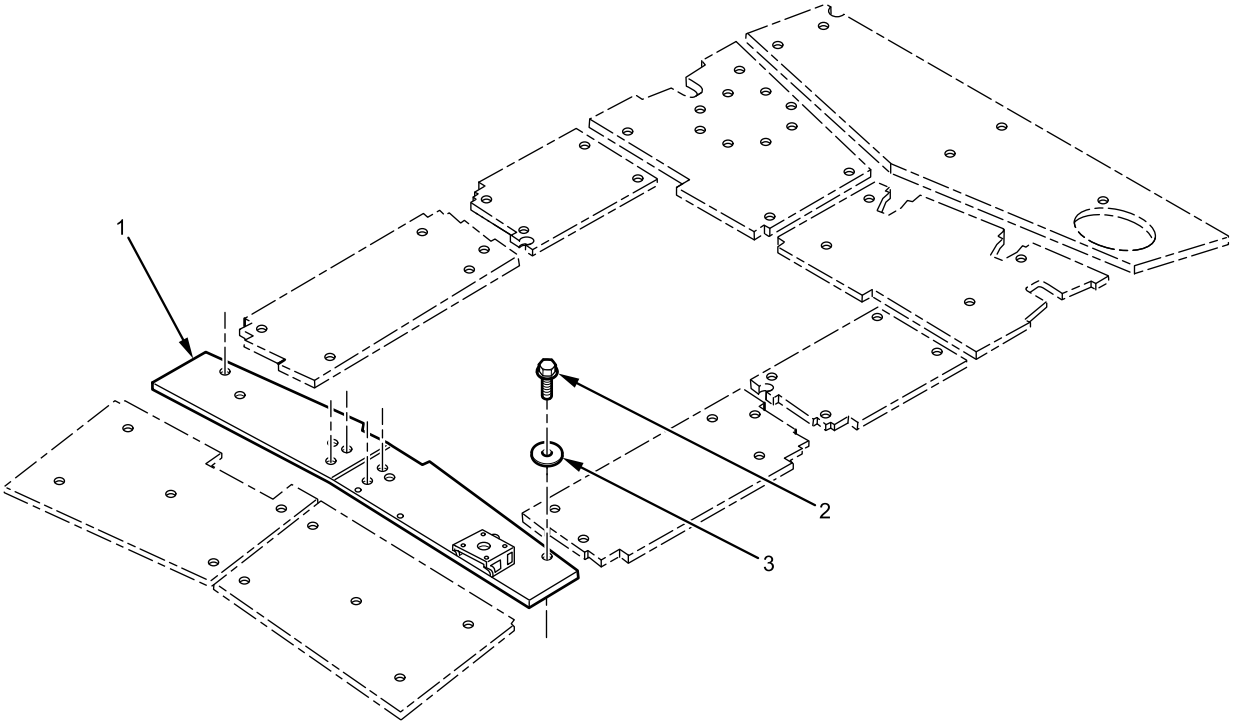

B231810652

Figure 1. Roof Armor Front Spoiler.

END OF TASK

INSTALLATION

WARNING

Corrosion preventive compound is toxic. Use only in well-ventilated area. Do not get in eyes; wear chemical safety goggles and full-face shield when using. Avoid contact with skin and wear rubber or plastic, solvent-resistant gloves. In case of contact, remove contaminated clothing and immediately wash area with soap and water. If compound contacts eyes, flush eyes with large amounts of water for at least 15 minutes and get immediate medical attention. If swallowed, do not induce vomiting; contact a physician immediately. Failure to comply may result in serious injury or death to personnel.

ROOF ARMOR FRONT SPOILER REMOVAL AND INSTALLATION - (CONTINUED)

1. Apply corrosion preventive compound to all roof armor front spoiler bolts (Figure 2, Item 2).

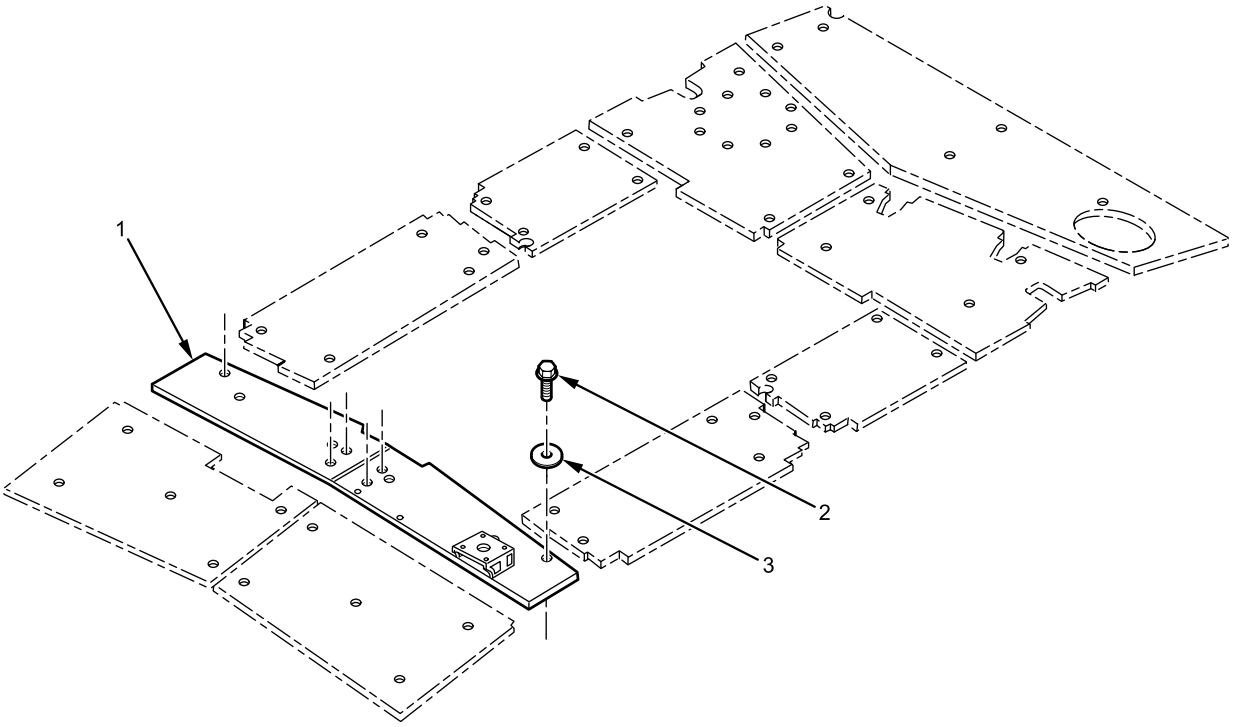

Figure 2. Roof Armor Front Spoiler.

2. With assistant, install roof armor front spoiler (Figure 2, Item 1) with six flat washers (Figure 2, Item 3) and bolts (Figure 2, Item 2). Torque bolts to 34-38 lb-ft (46-51 N•m).

END OF TASK

FOLLOW-ON MAINTENANCE

1. Install outside gunner protection riser (WP 0702).
2. Install roof spotlight (WP 0363).
3. Remove wheel chocks (TM 9-2355-106-10).

END OF TASK

END OF WORK PACKAGE

FIELD MAINTENANCE

ROOF ARMOR MIDDLE FRONT PANEL REMOVAL AND INSTALLATION

INITIAL SETUP:

Tools and Special Tools
General Mechanic's Tool Kit (GMTK) (WP 0795, Item 37)
Wrench, torque, 20-100 lb-ft, 3/8-inch drive (WP 0795, Item 141)
Lifting device (WP 0795, Item 67)

Materials/Parts
Compound (WP 0794, Item 13)
Goggles, industrial (WP 0794, Item 20)
Faceshield, industrial (WP 0794, Item 16)
Gloves (WP 0794, Item 18)
Gloves (WP 0794, Item 19)

Personnel Required
Maintainer - (2)

References
TM 9-2355-106-10
TM 9-2355-106-23P
WP 0782

Equipment Condition
Parking brake set (TM 9-2355-106-10)
Transmission set in NEUTRAL (N) (TM 9-2355-106-10)
Engine off (TM 9-2355-106-10)
MAIN POWER switch off (TM 9-2355-106-10)
Wheels chocked (TM 9-2355-106-10)
Outside gunner protection riser removed (WP 0702)

WARNING

Armor parts are heavy. Use care when removing or installing. Do not attempt to lift without an assistant and lifting device. Wear gloves. Failure to comply may result in serious injury or death to personnel.

NOTE

This procedure is the same for right side roof armor. Left side shown.

ROOF ARMOR MIDDLE FRONT PANEL REMOVAL AND INSTALLATION - (CONTINUED)

REMOVAL

1. With assistant, remove four bolts (Figure 1, Item 2) and washers (Figure 1, Item 3) from middle front roof armor panel (Figure 1, Item 1). Remove armor panel (Figure 1, Item 1).

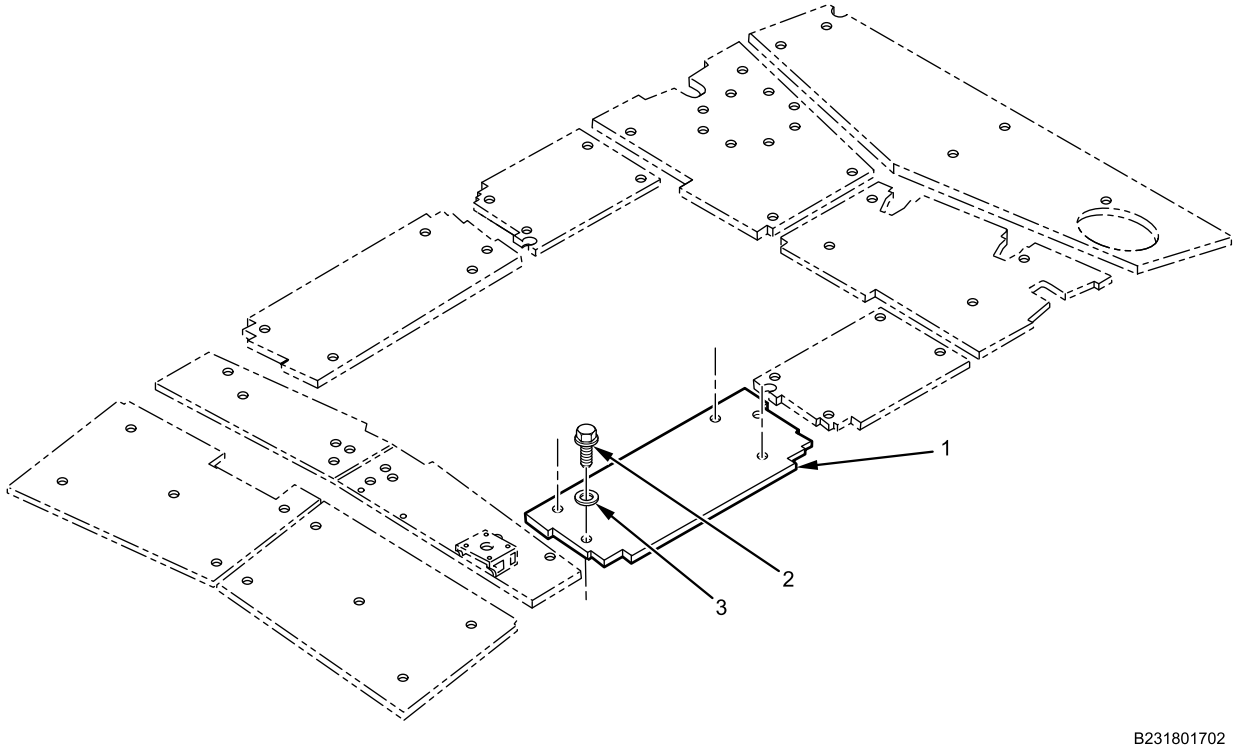

Figure 1. Roof Armor Middle Front Panel.

END OF TASK

INSTALLATION

WARNING

Corrosion preventive compound is toxic. Use only in well-ventilated area. Do not get in eyes; wear chemical safety goggles and full-face shield when using. Avoid contact with skin and wear rubber or plastic, solvent-resistant gloves. In case of contact, remove contaminated clothing and immediately wash area with soap and water. If compound contacts eyes, flush eyes with large amounts of water for at least 15 minutes and get immediate medical attention. If swallowed, do not induce vomiting; contact a physician immediately. Failure to comply may result in serious injury or death to personnel.

1. Apply corrosion preventive compound on bolts (Figure 2, Item 2).

ROOF ARMOR MIDDLE FRONT PANEL REMOVAL AND INSTALLATION - (CONTINUED)

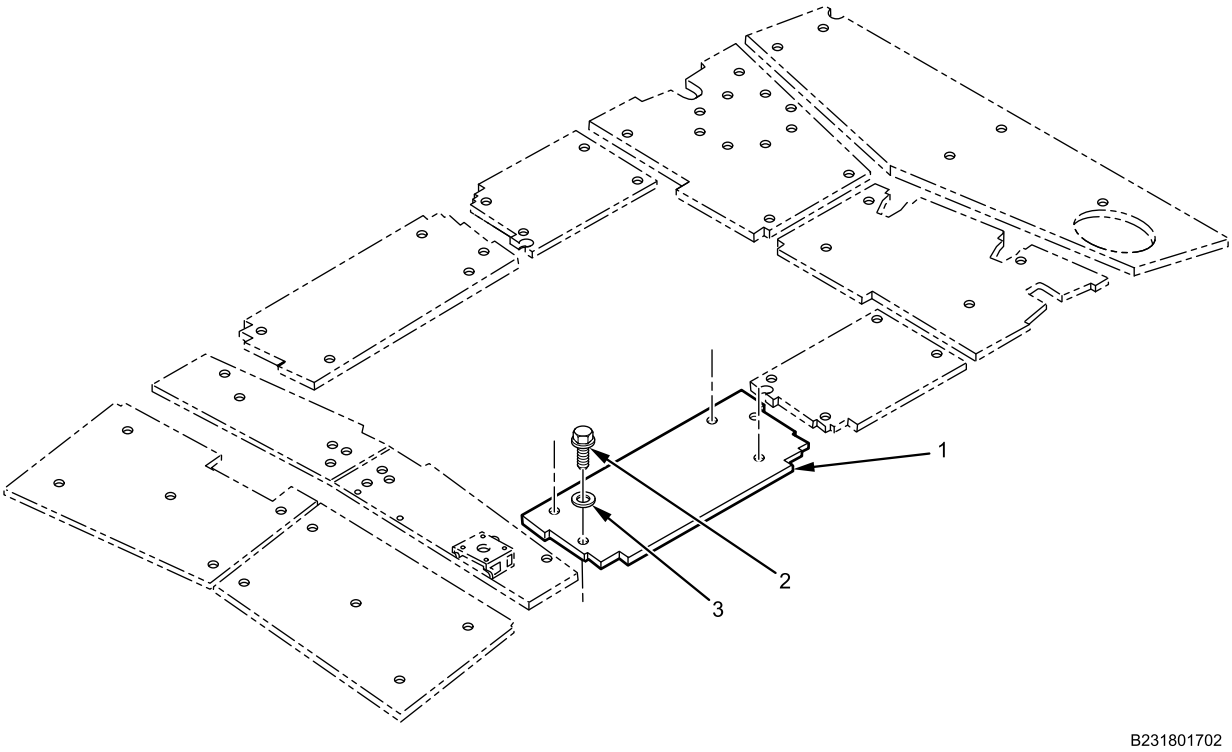

Figure 2. Roof Armor Middle Front Panel.

2. With assistant, install middle front roof armor panel (Figure 2, Item 1) with four bolts (Figure 2, Item 2) and washers (Figure 2, Item 3). Torque bolts to 34-38 lb-ft (46-51 N•m).

END OF TASK

FOLLOW-ON MAINTENANCE

1. Install outside gunners protection riser (WP 0702).
2. Remove wheel chocks (TM 9-2355-106-10).

END OF TASK

END OF WORK PACKAGE

FIELD MAINTENANCE

ROOF ARMOR MIDDLE REAR PANEL REMOVAL AND INSTALLATION

INITIAL SETUP:

Tools and Special Tools
General Mechanic's Tool Kit (GMTK) (WP 0795, Item 37)
Wrench, torque, 20-100 lb-ft, 3/8-inch drive (WP 0795, Item 141)
Lifting device (WP 0795, Item 67)
Gloves (WP 0794, Item 19)

Materials/Parts
Compound (WP 0794, Item 13)
Goggles, industrial (WP 0794, Item 20)
Faceshield, industrial (WP 0794, Item 16)
Gloves (WP 0794, Item 18)

Personnel Required
Maintainer - (2)

References
TM 9-2355-106-10
TM 9-2355-106-23P
WP 0782

Equipment Condition
Parking brake set (TM 9-2355-106-10)
Transmission set in NEUTRAL (N) (TM 9-2355-106-10)
Engine off (TM 9-2355-106-10)
MAIN POWER switch off (TM 9-2355-106-10)
Wheels chocked (TM 9-2355-106-10)
Outside gunner protection riser removed (WP 0702)

WARNING

Armor parts are heavy. Use care when removing or installing. Do not attempt to lift without an assistant and lifting device. Wear gloves. Failure to comply may result in serious injury or death to personnel.

NOTE

Armor weight is approximately 25 lbs.

This procedure is the same for right side roof armor. Left side procedure shown.

ROOF ARMOR MIDDLE REAR PANEL REMOVAL AND INSTALLATION - (CONTINUED)

REMOVAL

1. Remove four bolts (Figure 1, Item 2) and washers (Figure 1, Item 3) from middle rear roof armor panel (Figure 1, Item 1). With assistant, remove armor panel (Figure 1, Item 1).

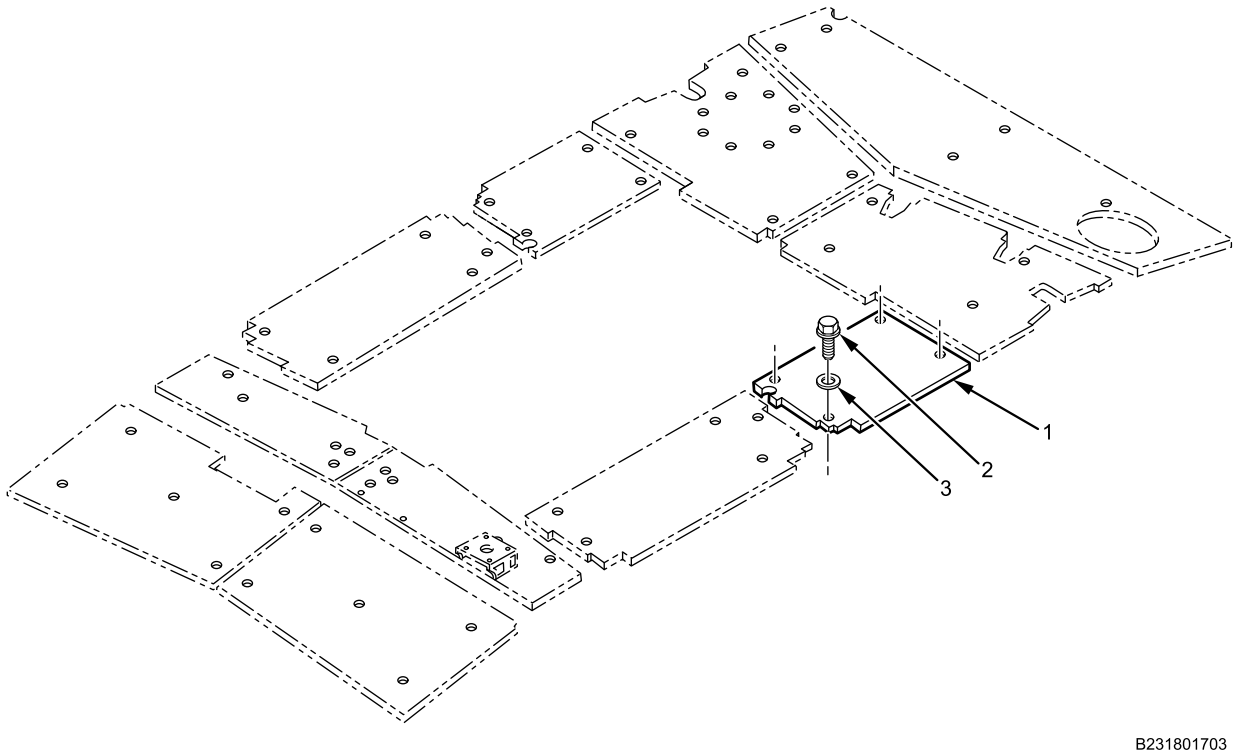

Figure 1. Roof Armor Middle Rear Panel.

END OF TASK

INSTALLATION

WARNING

Corrosion preventive compound is toxic. Use only in well-ventilated area. Do not get in eyes; wear chemical safety goggles and full-face shield when using. Avoid contact with skin and wear rubber or plastic, solvent-resistant gloves. In case of contact, remove contaminated clothing and immediately wash area with soap and water. If compound contacts eyes, flush eyes with large amounts of water for at least 15 minutes and get immediate medical attention. If swallowed, do not induce vomiting; contact a physician immediately. Failure to comply may result in serious injury or death to personnel.

1. Apply corrosion preventive compound on bolts (Figure 2, Item 2)

ROOF ARMOR MIDDLE REAR PANEL REMOVAL AND INSTALLATION - (CONTINUED)

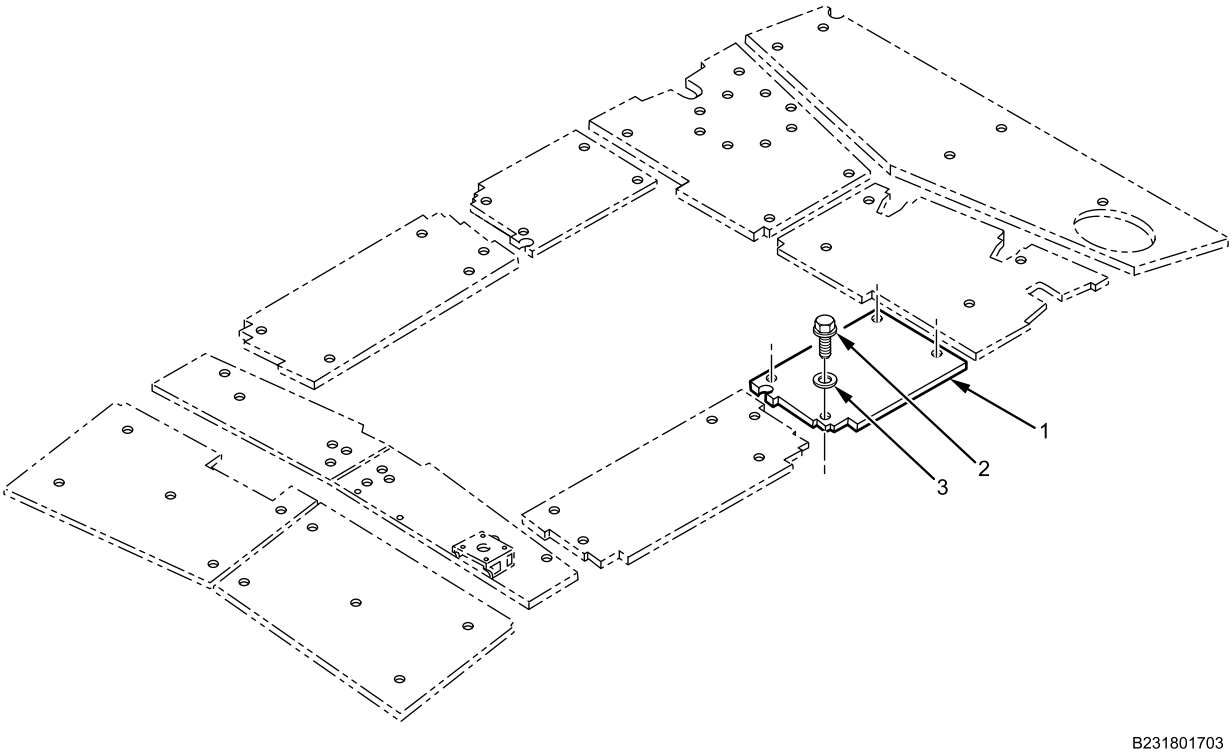

Figure 2. Roof Armor Middle Rear Panel.

2. With assistant, install middle rear roof armor panel (Figure 2, Item 1) with four bolts (Figure 2, Item 2) and washers (Figure 2, Item 3). Torque bolts (Figure 2, Item 2) to 34-38 lb-ft (46-51 N•m).

END OF TASK

FOLLOW-ON MAINTENANCE

1. Install outside gunner protection riser (WP 0702).
2. Remove wheel chocks (TM 9-2355-106-10).

END OF TASK

END OF WORK PACKAGE

FIELD MAINTENANCE

ROOF ARMOR REAR SPOILER REMOVAL AND INSTALLATION

INITIAL SETUP:

Tools and Special Tools
General Mechanic's Tool Kit (GMTK) (WP 0795, Item 37)
Lifting device (WP 0795, Item 67)
Lifting sling (WP 0795, Item 68)
Torque wrench, 3/8-inch drive (20-100 lb-ft) (WP 0795, Item 141)

Materials/Parts
Compound (WP 0794, Item 13)
Gloves (WP 0794, Item 18)
Goggles, industrial (WP 0794, Item 20)
Faceshield, industrial (WP 0794, Item 16)

Personnel Required
Maintainer - (2)

References
TM 9-2355-106-10
TM 9-2355-106-23P
WP 0782

Equipment Condition
Parking brake set (TM 9-2355-106-10)
Transmission set in NEUTRAL (N) (TM 9-2355-106-10)
Engine off (TM 9-2355-106-10)
MAIN POWER switch off (TM 9-2355-106-10)
Wheels chocked (TM 9-2355-106-10)

WARNING

Armor parts are heavy. Use care when removing or installing. Do not attempt to lift without an assistant and lifting device. Wear gloves. Failure to comply may result in serious injury or death to personnel.

ROOF ARMOR REAR SPOILER REMOVAL AND INSTALLATION - (CONTINUED)

REMOVAL

NOTE

Right side shown, left side similar.

1. Remove two bolts (Figure 1, Item 1) and washers from upper ladder step (Figure 1, Item 2).

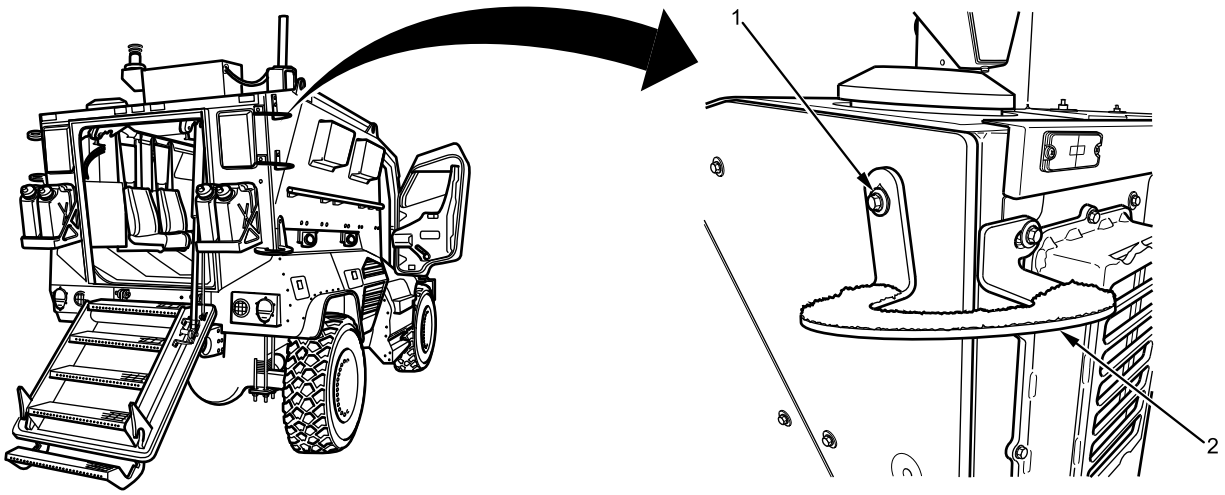

Figure 1. Upper Ladder Step.

2. Remove upper ladder step (Figure 1, Item 2) from vehicle.
3. Remove bolt (Figure 2, Item 2) from light bar (Figure 2, Item 1) and position light bar aside.

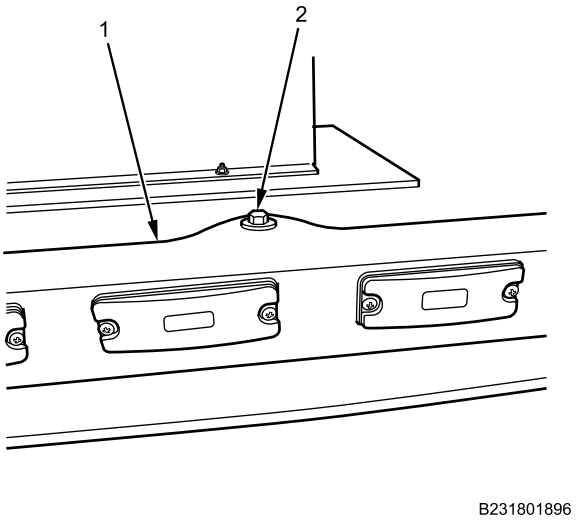

Figure 2. Light Bar.

ROOF ARMOR REAR SPOILER REMOVAL AND INSTALLATION - (CONTINUED)

4. Secure lifting sling to roof armor rear panel (Figure 3, Item 1) and attach sling to lifting device.

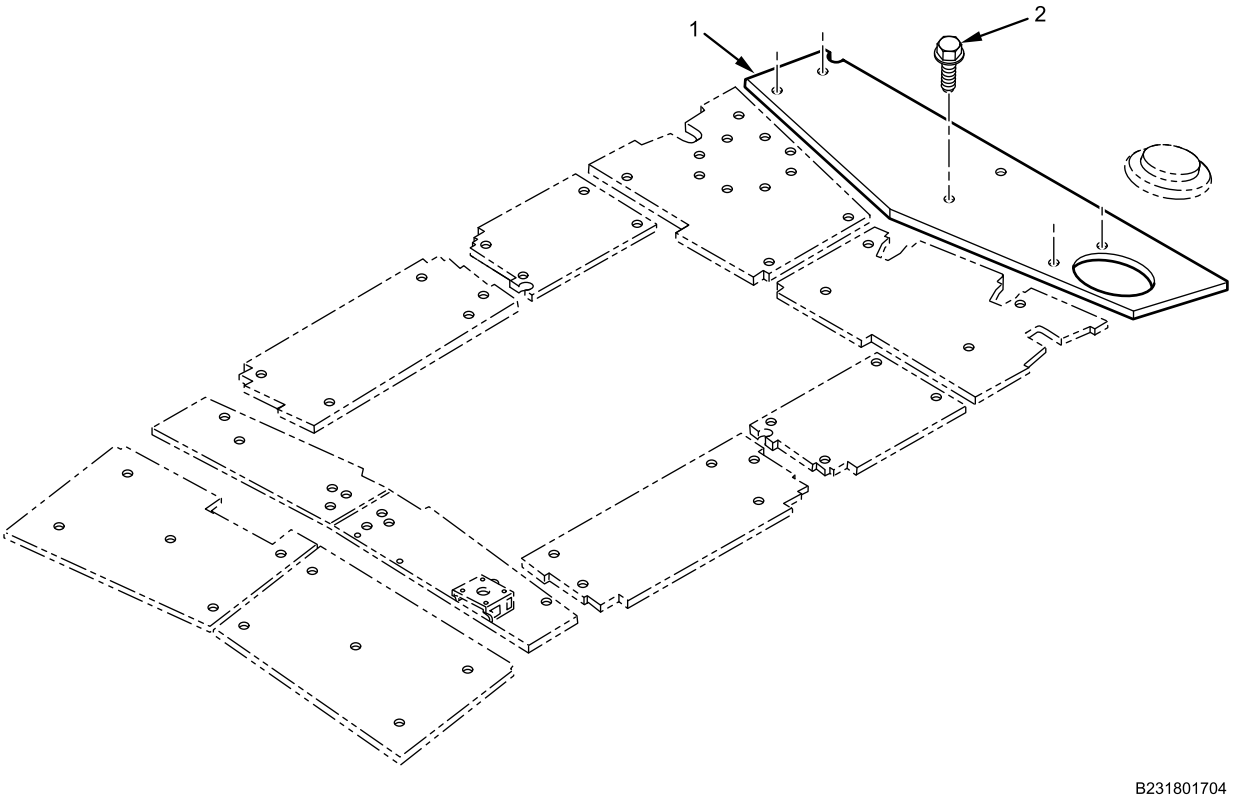

Figure 3. Roof Armor Rear Panel.

5. With assistant, remove six bolts (Figure 3, Item 2) and washers from roof armor rear panel (Figure 3, Item 1). Remove armor panel.

END OF TASK

ROOF ARMOR REAR SPOILER REMOVAL AND INSTALLATION - (CONTINUED)

INSTALLATION

WARNING

Corrosion preventive compound is toxic. Use only in well-ventilated area. Do not get in eyes; wear chemical safety goggles and full-face shield when using. Avoid contact with skin and wear rubber or plastic, solvent-resistant gloves. In case of contact, remove contaminated clothing and immediately wash area with soap and water. If compound contacts eyes, flush eyes with large amounts of water for at least 15 minutes and get immediate medical attention. If swallowed, do not induce vomiting; contact a physician immediately. Failure to comply may result in serious injury or death to personnel.

1. Apply corrosion preventive compound on six roof armor rear panel bolts (Figure 4, Item 2).

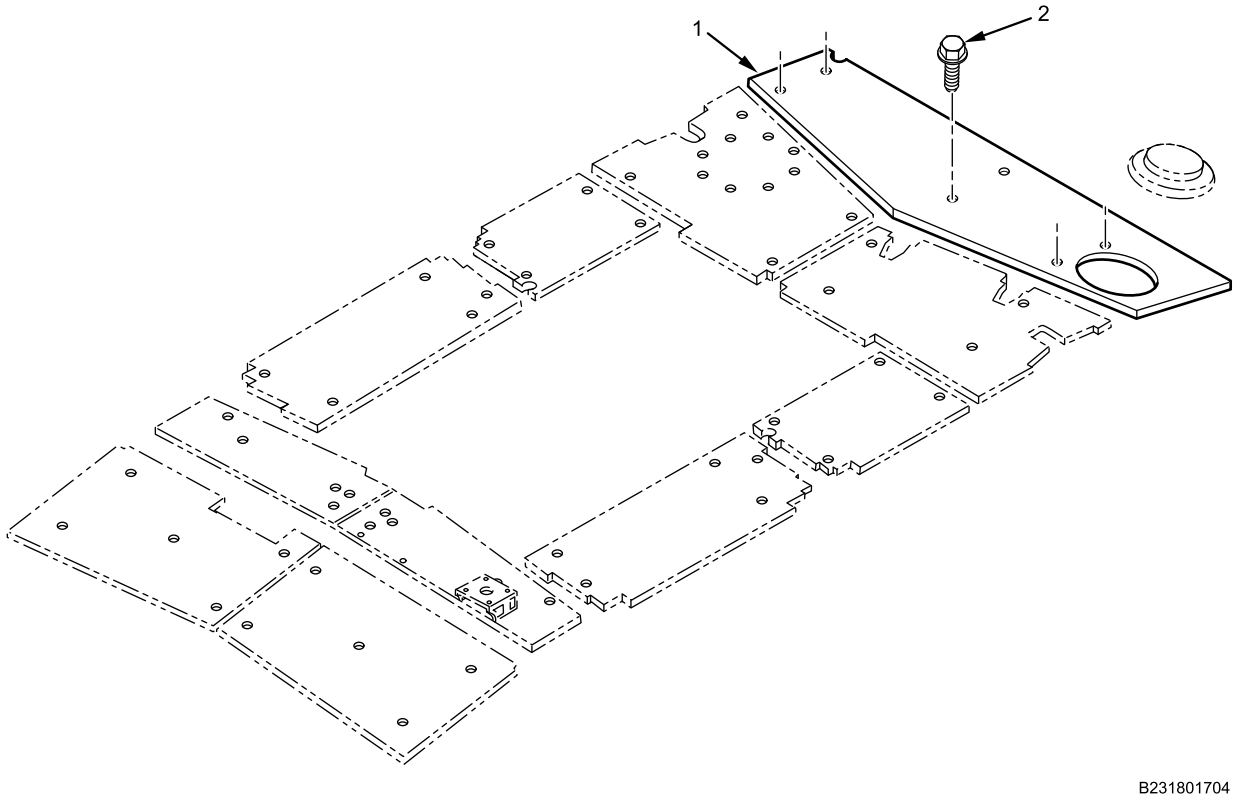

Figure 4. Roof Armor Rear Panel.

2. With assistant, install roof armor rear panel (Figure 4, Item 1) with six bolts (Figure 4, Item 2) and washers. Torque bolts to 34-38 lb-ft (46-51 N•m).
3. Apply corrosion preventive compound on light bar mounting bolt (Figure 5, Item 2).

ROOF ARMOR REAR SPOILER REMOVAL AND INSTALLATION - (CONTINUED)

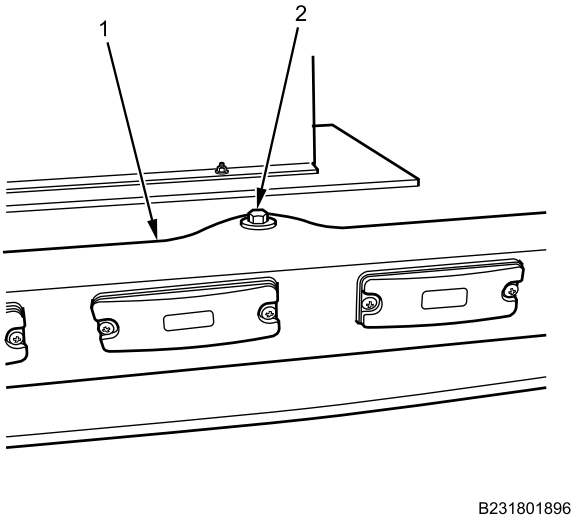

Figure 5. Light Bar.

4. Install light bar (Figure 5, Item 1) with bolt (Figure 5, Item 2)and washer.
5. Apply corrosion preventive compound on two bolts (Figure 6, Item 1).

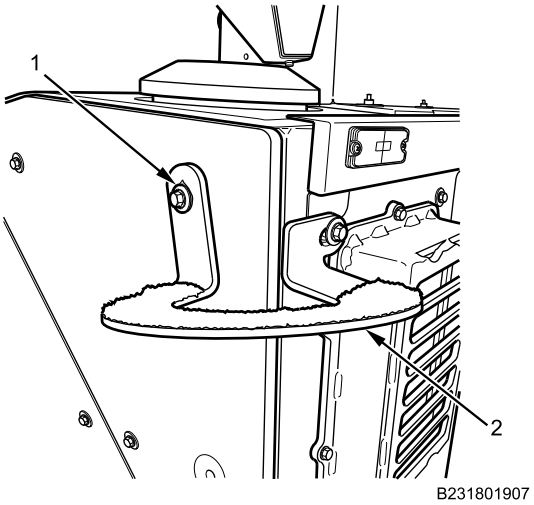

Figure 6. Upper Ladder Step.

6. Install upper ladder step (Figure 6, Item 2) with two bolts (Figure 6, Item 1) and washers.

END OF TASK

FOLLOW-ON MAINTENANCE

1. Remove wheel chocks (TM 9-2355-106-10).

END OF TASK

END OF WORK PACKAGE

FIELD MAINTENANCE

ROOF ARMOR REAR PANEL REMOVAL AND INSTALLATION

INITIAL SETUP:

Tools and Special Tools
General Mechanic's Tool Kit (GMTK) (WP 0795, Item 37)
Wrench, torque, 20-100 lb-ft, 3/8-inch drive (WP 0795, Item 141)
Lifting device (WP 0795, Item 67)

Materials/Parts
Gloves (WP 0794, Item 18)
Gloves (WP 0794, Item 19)
Goggles, industrial (WP 0794, Item 20)
Faceshield, industrial (WP 0794, Item 16)
Compound (WP 0794, Item 13)

Personnel Required
Maintainer - (2)

References
TM 9-2355-106-10
TM 9-2355-106-23P
WP 0782

Equipment Condition
Parking brake set (TM 9-2355-106-10)
Transmission set in NEUTRAL (N) (TM 9-2355-106-10)
Engine off (TM 9-2355-106-10)
MAIN POWER switch off (TM 9-2355-106-10)
Wheels chocked (TM 9-2355-106-10)

WARNING

Armor parts are heavy. Use care when removing or installing. Do not attempt to lift without an assistant and lifting device. Wear gloves. Failure to comply may result in serious injury or death to personnel.

NOTE

This procedure is the same for right side roof armor. Left side procedure shown. Armor weight is approximately 45 lbs.

ROOF ARMOR REAR PANEL REMOVAL AND INSTALLATION - (CONTINUED)

REMOVAL

1. Remove four bolts (Figure 1, Item 1) and washers (Figure 1, Item 3) from roof armor rear panel (Figure 1, Item 2).

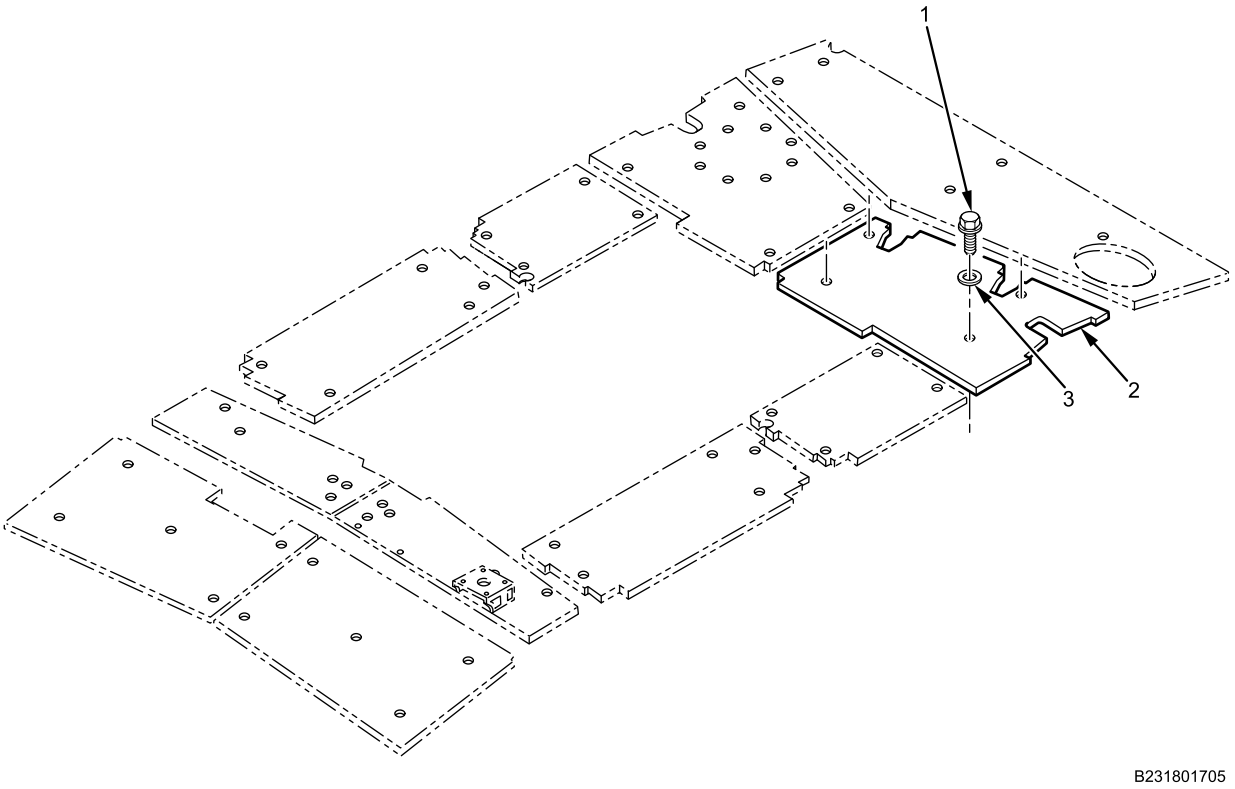

Figure 1. Roof Armor Rear Panel.

2. With assistant, remove roof armor rear panel (Figure 1, Item 2).

END OF TASK

INSTALLATION

WARNING

Corrosion preventive compound is toxic. Use only in well-ventilated area. Do not get in eyes; wear chemical safety goggles and full-face shield when using. Avoid contact with skin and wear rubber or plastic, solvent-resistant gloves. In case of contact, remove contaminated clothing and immediately wash area with soap and water. If compound contacts eyes, flush eyes with large amounts of water for at least 15 minutes and get immediate medical attention. If swallowed, do not induce vomiting; contact a physician immediately. Failure to comply may result in serious injury or death to personnel.

1. Apply corrosion preventive compound on four roof armor mounting bolts (Figure 2, Item 1).

ROOF ARMOR REAR PANEL REMOVAL AND INSTALLATION - (CONTINUED)

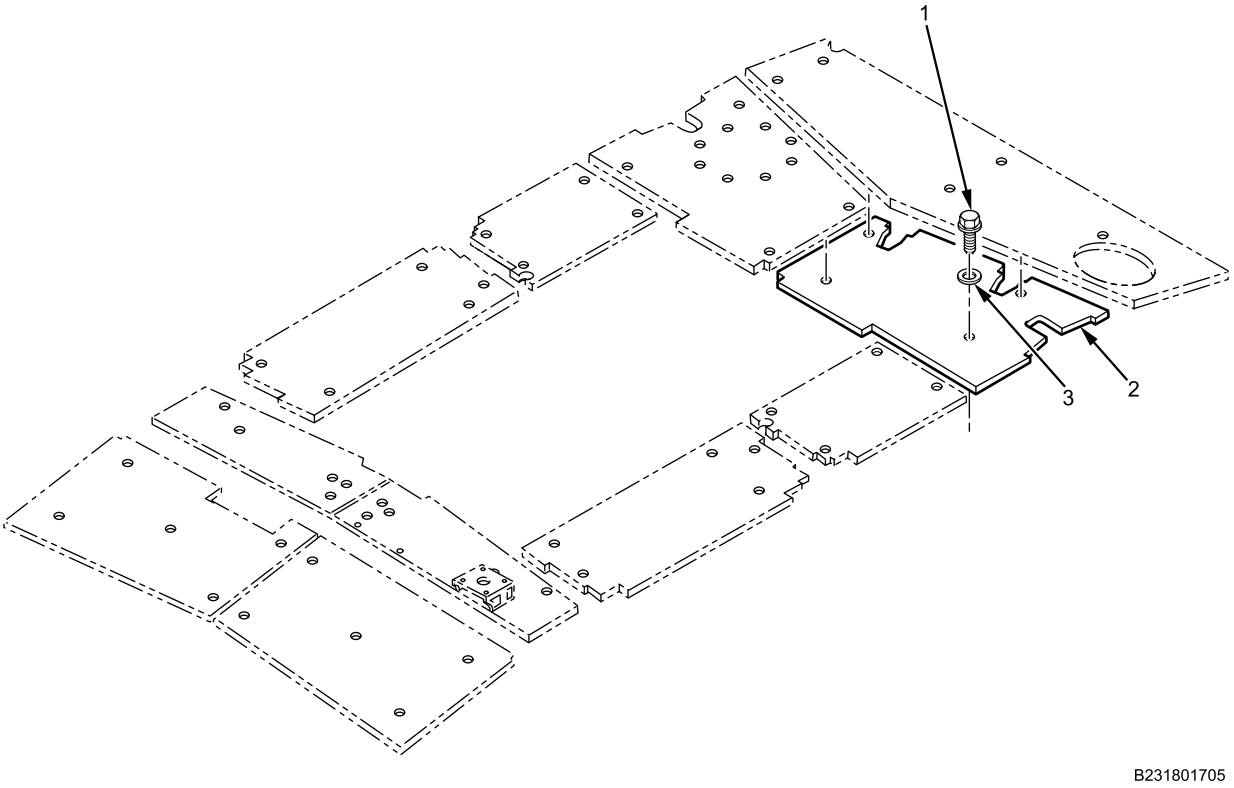

Figure 2. Roof Armor Rear Panel.

2. With assistant, install roof armor rear panel (Figure 2, Item 2).
3. Install four bolts (Figure 2, Item 1) and washers (Figure 2, Item 3). Torque bolts (Figure 2, Item 1) to 34-38 lb-ft (46-51 N•m).

END OF TASK

FOLLOW-ON MAINTENANCE

1. Remove wheel chocks (TM 9-2355-106-10).

END OF TASK

END OF WORK PACKAGE

FIELD MAINTENANCE

WEAPON (SLIDING) HATCH (GUNNER HATCH) REMOVAL AND INSTALLATION

INITIAL SETUP:

Tools and Special Tools
General Mechanic's Tool Kit (GMTK) (WP 0795, Item 37)
Lifting sling (2) (WP 0795, Item 68)
Lifting device (WP 0795, Item 67)
Grease gun (WP 0795, Item 41)

Materials/Parts
Lockwasher - (8) (WP 0796, Item 26)
Grease (WP 0794, Item 21)
Compound (WP 0794, Item 13)
Goggles, industrial (WP 0794, Item 20)
Faceshield, industrial (WP 0794, Item 16)
Gloves (WP 0794, Item 18)
Gloves (WP 0794, Item 19)

Personnel Required
Maintainer - (2)

References
TM 9-2355-106-10
TM 9-2355-106-23P
WP 0782

Equipment Condition
Parking brake set (TM 9-2355-106-10)
Transmission set in NEUTRAL (N) (TM 9-2355-106-10)
Engine off (TM 9-2355-106-10)
MAIN POWER switch off (TM 9-2355-106-10)
Wheels chocked (TM 9-2355-106-10)
Turret mounting plate removed (WP 0705)
Gun turret platform removed (WP 0704)
Outside gunner protection riser removed (WP 0702)
Weapon (sliding) hatch (gunner hatch) inner lock assembly removed (WP 0591)

WARNING

Gunner hatch is extremely heavy. Use caution when opening and closing. Wear safety goggles when removing, installing, or working on interior of gunner hatch. Keep arms and hands clear of gunner hatch when closing. Failure to comply may result in damage to equipment and serious injury or death to personnel.

Armor parts are heavy. Use care when removing or installing. Do not attempt to lift without an assistant and lifting device. Wear gloves. Failure to comply may result in serious injury or death to personnel.

Use the appropriate lifting sling and chain hoist for the type of load. Clean lifting slings and chain hoists prior to use and inspect for damage such as wear, corrosion, elongation, tears, or punctures. Replace lifting slings and chain hoists that are damaged. Failure to comply may result in damage to equipment and injury or death to personnel.

Prior to moving heavy components with lifting device, clear path of travel and clear personnel from area. Use proper lifting device for weight of item. Use extreme caution if lifting objects overhead or backing up. Stop and lower load as soon as possible. Failure to comply may result in damage to equipment and serious injury or death to personnel.

NOTE

Gunner hatch removal and installation task instructions should be discussed prior to starting the hatch replacement task, to ensure instructions are understood by all participants.

WEAPON (SLIDING) HATCH (GUNNER HATCH) REMOVAL AND INSTALLATION - (CONTINUED)

REMOVAL

1. Partially open gunner hatch (Figure 1, Item 10).

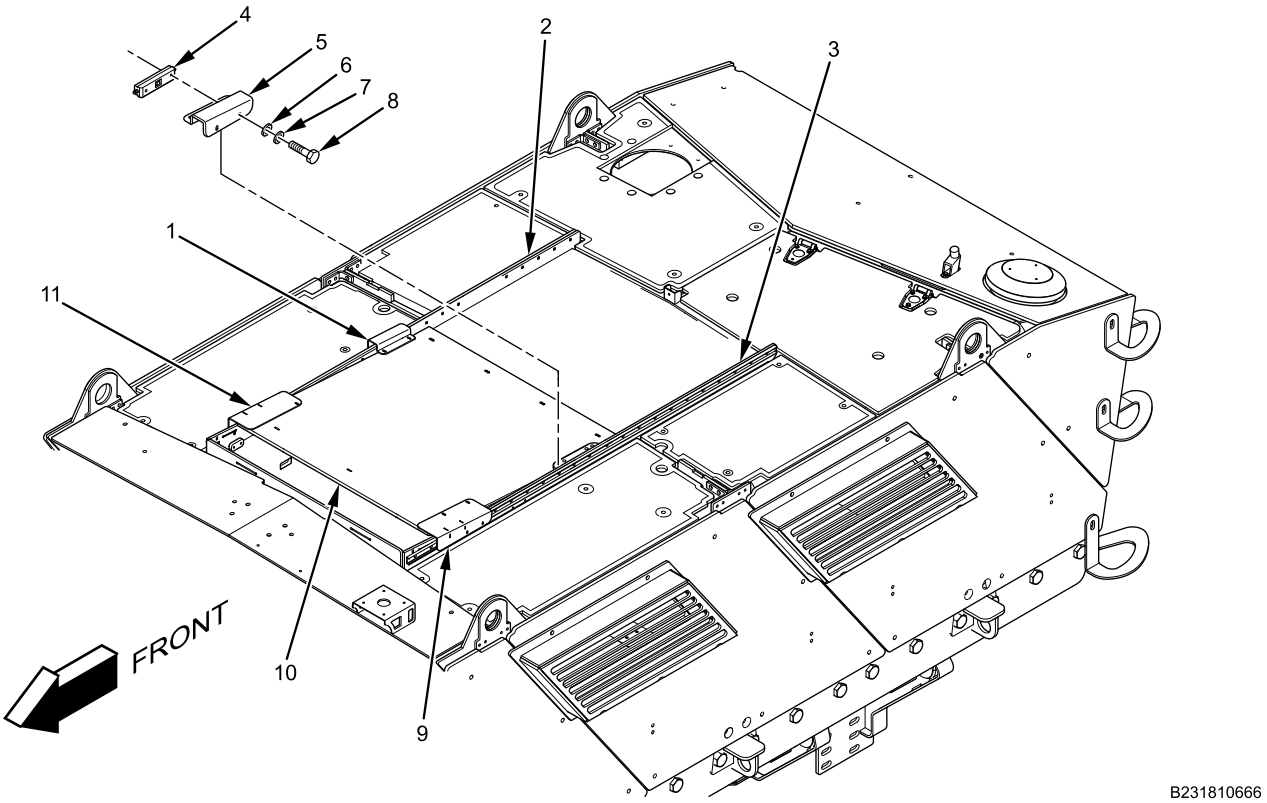

Figure 1. Gunner Hatch Sliders.

NOTE

Front and rear brackets must remain on gunner hatch to aid in removal.

2. Remove four bolts (Figure 1, Item 8), flat washers (Figure 1, Item 7), lockwashers (Figure 1, Item 6), and rear gunner hatch sliders (Figure 1, Item 4) from rear brackets (Figure 1, Item 1 and 5). Discard lockwashers.
3. Move rear gunner hatch sliders (Figure 1, Item 4) rearward and out through ends of gunner hatch rails (Figure 1, Item 2 and 3).
4. Remove four bolts (Figure 1, Item 8), flat washers (Figure 1, Item 7), lockwashers (Figure 1, Item 6), and front gunner hatch sliders (Figure 1, Item 4) from front holder brackets (Figure 1, Item 9 and 11). Discard lockwashers.
5. Move front gunner hatch sliders (Figure 1, Item 4) rearward and out through ends of gunner hatch rails (Figure 1, Item 2 and 3).

WEAPON (SLIDING) HATCH (GUNNER HATCH) REMOVAL AND INSTALLATION - (CONTINUED)

NOTE

Note orientation of gunner hatch to aid in installation.

6. Position one lifting sling (Figure 2, Item 6) under left rear bracket (Figure 2, Item 7) and left front holder bracket (Figure 2, Item 1).

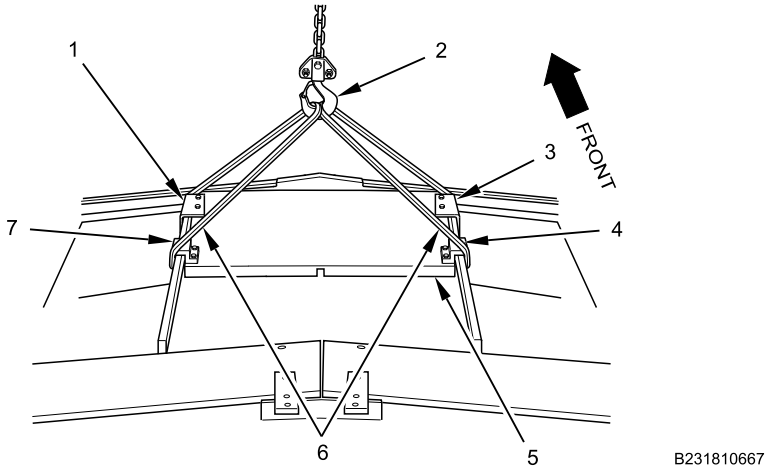

Figure 2. Gunner Hatch Removal.

7. Position one lifting sling (Figure 2, Item 6) under right rear bracket (Figure 2, Item 4) and right front holder bracket (Figure 2, Item 3).
8. Secure lifting slings (Figure 2, Item 6) to suitable lifting device (Figure 2, Item 2).
9. With suitable lifting device and assistant, remove gunner hatch (Figure 2, Item 5) from vehicle.

END OF TASK

WEAPON (SLIDING) HATCH (GUNNER HATCH) REMOVAL AND INSTALLATION - (CONTINUED)

DISASSEMBLY

1. Remove four bolts (Figure 3, Item 6), flat washers (Figure 3, Item 5), and rear brackets (Figure 3, Item 7 and 11) from gunner hatch (Figure 3, Item 4).

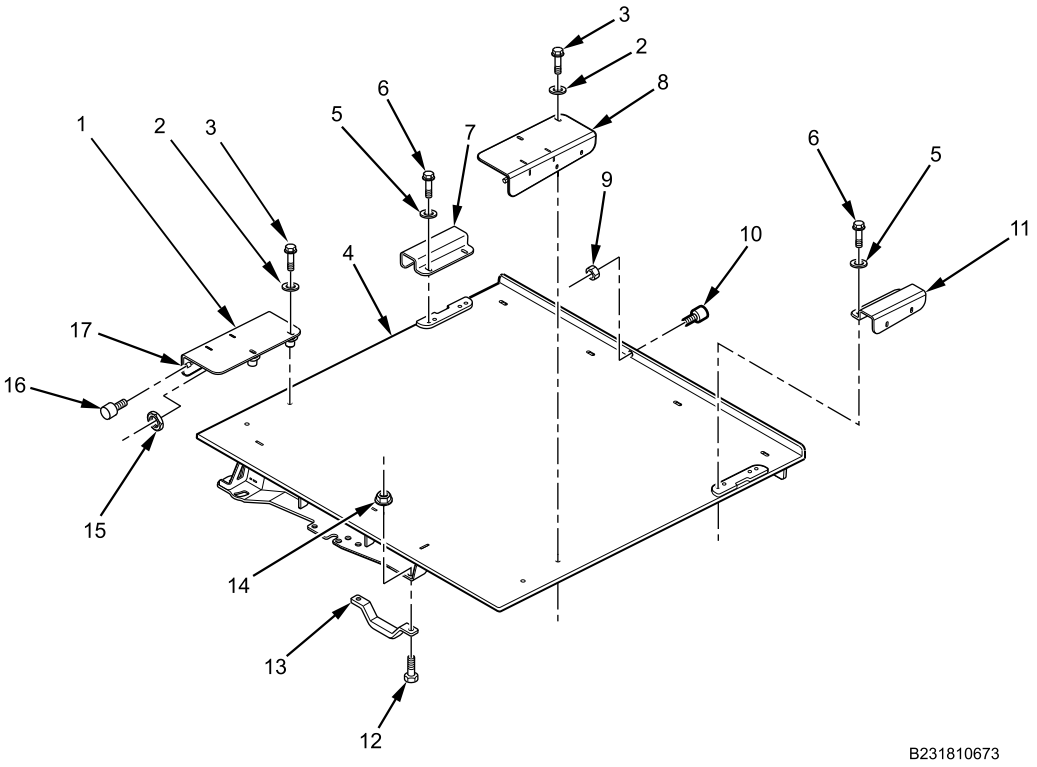

Figure 3. Gunner Hatch Brackets, Shock Absorbers, Rubber Buffer, and Handle.

NOTE

Note orientation of front holder brackets to aid in installation.

2. Remove four bolts (Figure 3, Item 3), flat washers (Figure 3, Item 2), and front holder brackets (Figure 3, Item 1 and 8) from gunner hatch (Figure 3, Item 4).
3. Remove two shock absorber nuts (Figure 3, Item 15) and shock absorbers (Figure 3, Item 16) from shock absorber mounting brackets (Figure 3, Item 17) on underside of front holder brackets (Figure 3, Item 1 and 8).
4. Remove nut (Figure 3, Item 9) and rubber buffer (Figure 3, Item 10) from gunner hatch (Figure 3, Item 4).
5. Remove two nuts (Figure 3, Item 14), two bolts (Figure 3, Item 12), and gunner hatch handle (Figure 3, Item 13) from gunner hatch (Figure 3, Item 4).

WEAPON (SLIDING) HATCH (GUNNER HATCH) REMOVAL AND INSTALLATION - (CONTINUED)

NOTE

Note orientation of gunner hatch rails to aid in installation.

6. Remove 40 screws (Figure 4, Item 2) and gunner hatch rails (Figure 4, Item 1 and 3).

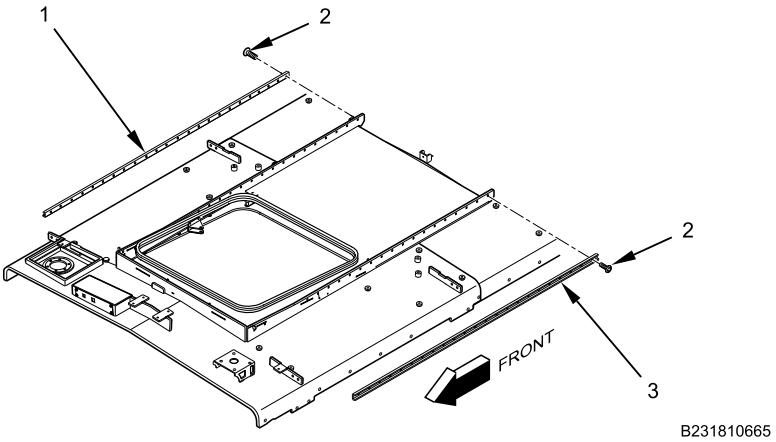

Figure 4. Gunner Hatch Rails.

END OF TASK

WEAPON (SLIDING) HATCH (GUNNER HATCH) REMOVAL AND INSTALLATION - (CONTINUED)

ASSEMBLY

WARNING

Corrosion preventive compound is toxic. Use only in well-ventilated area. Do not get in eyes; wear chemical safety goggles and full-face shield when using. Avoid contact with skin and wear rubber or plastic, solvent-resistant gloves. In case of contact, remove contaminated clothing and immediately wash area with soap and water. If compound contacts eyes, flush eyes with large amounts of water for at least 15 minutes and get immediate medical attention. If swallowed, do not induce vomiting; contact a physician immediately. Failure to comply may result in serious injury or death to personnel.

NOTE

Apply corrosion preventive compound to all gunner hatch bolt threads.

1. Install gunner hatch rails (Figure 5, Item 1 and 3) with 40 screws (Figure 5, Item 2).

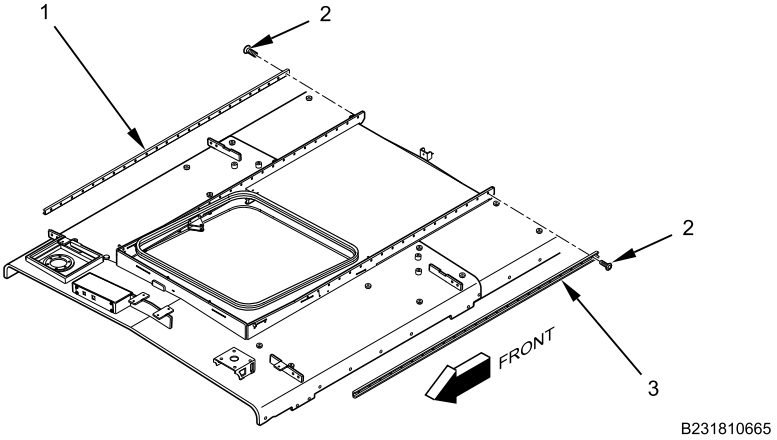

Figure 5. Gunner Hatch Rails.

2. Install two nuts (Figure 6, Item 14), two bolts (Figure 6, Item 12), and gunner hatch handle (Figure 6, Item 13) on gunner hatch (Figure 6, Item 4). Tighten handle nuts.
3. Install rubber buffer (Figure 6, Item 10) and nut (Figure 6, Item 9) on gunner hatch (Figure 6, Item 4). Tighten rubber buffer nut.

WEAPON (SLIDING) HATCH (GUNNER HATCH) REMOVAL AND INSTALLATION - (CONTINUED)

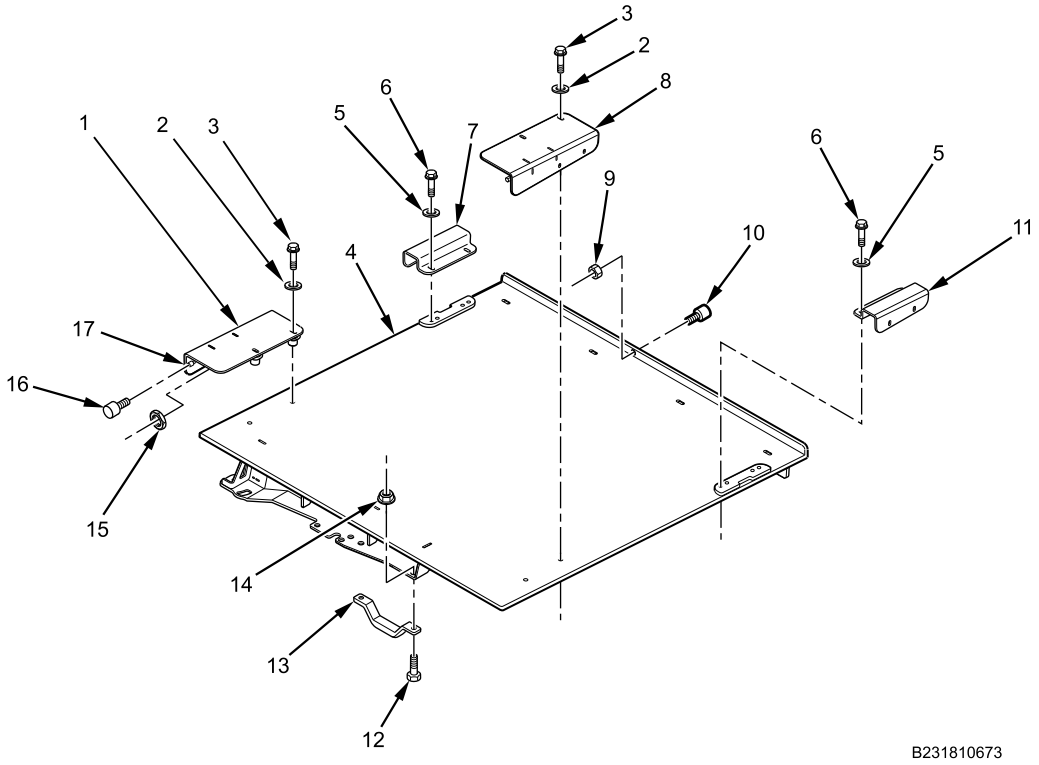

Figure 6. Handle, Shock Absorbers, Rubber Buffer, and Gunner Hatch Brackets.

4. Install two shock absorbers (Figure 6, Item 16) with two shock absorber nuts (Figure 6, Item 15) to shock absorber mounting brackets (Figure 6, Item 17) on underside of front holder brackets (Figure 6, Item 1 and 8). Tighten shock absorber nuts.

NOTE

Ensure front holder brackets are positioned as far outward as possible before tightening bolts.

Ensure rear brackets are positioned as far outward as possible before tightening bolts.

5. Install four flat washers (Figure 6, Item 5), bolts (Figure 6, Item 6), and front holder brackets (Figure 6, Item 1 and 8), as observed during removal, on front of gunner hatch (Figure 6, Item 4). Tighten front holder bracket bolts.
6. Install four flat washers (Figure 6, Item 2), bolts (Figure 6, Item 3), and rear brackets (Figure 6, Item 7 and 11), on rear of gunner hatch (Figure 6, Item 4). Tighten rear bracket bolts.

END OF TASK

WEAPON (SLIDING) HATCH (GUNNER HATCH) REMOVAL AND INSTALLATION - (CONTINUED)

INSTALLATION

WARNING

Corrosion preventive compound is toxic. Use only in well-ventilated area. Do not get in eyes; wear chemical safety goggles and full-face shield when using. Avoid contact with skin and wear rubber or plastic, solvent-resistant gloves. In case of contact, remove contaminated clothing and immediately wash area with soap and water. If compound contacts eyes, flush eyes with large amounts of water for at least 15 minutes and get immediate medical attention. If swallowed, do not induce vomiting; contact a physician immediately. Failure to comply may result in serious injury or death to personnel.

NOTE

Apply corrosion preventive compound to all gunner hatch bolt threads.

1. Position one lifting sling (Figure 7, Item 6) under right rear bracket (Figure 7, Item 4) and right front holder bracket (Figure 7, Item 3).

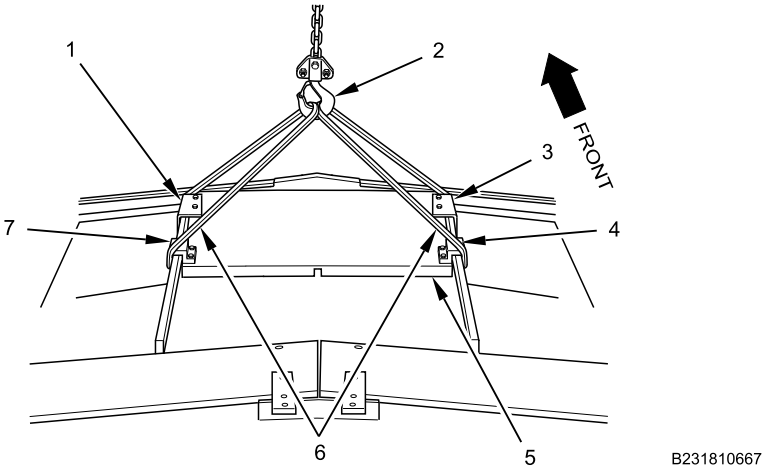

Figure 7. Gunner Hatch Removal.

2. Position one lifting sling (Figure 7, Item 6) under left rear bracket (Figure 7, Item 7) and left front holder bracket (Figure 7, Item 1).
3. With suitable lifting device (Figure 7, Item 2) and assistant, lift gunner hatch (Figure 7, Item 5) and carefully position between gunner hatch rails.

NOTE

Crowbar might be necessary to raise hatch when removing lifting slings from under gunner hatch brackets.

4. Remove two lifting slings from gunner hatch and lifting device.

WEAPON (SLIDING) HATCH (GUNNER HATCH) REMOVAL AND INSTALLATION - (CONTINUED)

NOTE

Check that grease fittings are installed in each end of hatch sliders and replace damaged grease fittings before installing hatch sliders in gunner hatch rails.

5. Install front gunner hatch sliders (Figure 8, Item 4) in each end of gunner hatch rails (Figure 8, Item 2 and 3).

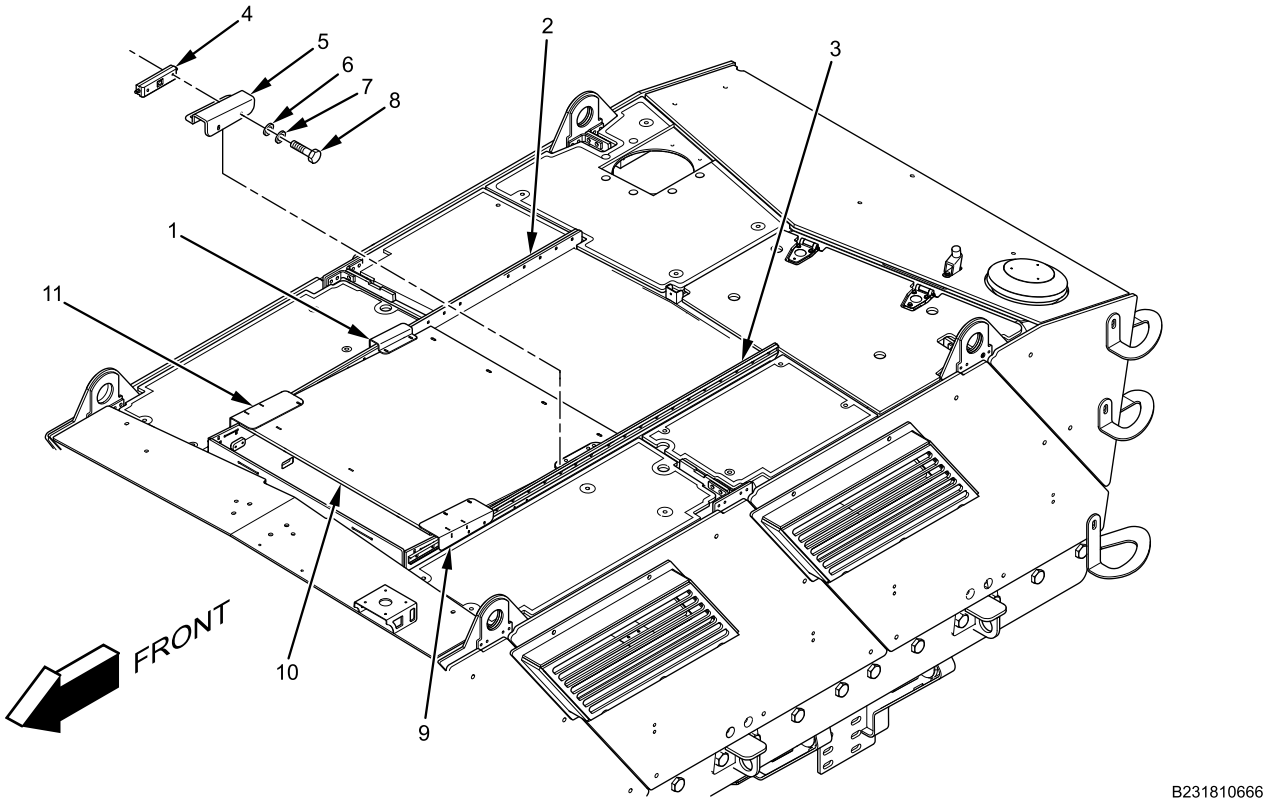

Figure 8. Gunner Hatch Sliders.

6. Move front gunner hatch sliders (Figure 8, Item 4) forward and align with mounting holes in front holder brackets (Figure 8, Item 9 and 11).
7. Install four bolts (Figure 8, Item 8), flat washers (Figure 8, Item 7), new lockwashers (Figure 8, Item 6), and front holder sliders (Figure 8, Item 4) on front holder brackets (Figure 8, Item 9 and 11). Tighten front holder bracket bolts.
8. Install rear gunner hatch sliders (Figure 8, Item 4) in each end of gunner hatch rails (Figure 8, Item 2 and 3).
9. Move rear gunner hatch sliders (Figure 8, Item 4) forward and align with mounting holes in rear brackets (Figure 8, Item 1 and 5).
10. Install four bolts (Figure 8, Item 8), flat washers (Figure 8, Item 7), new lockwashers (Figure 8, Item 6), and rear sliders (Figure 8, Item 4) on side of rear brackets (Figure 8, Item 1 and 5). Tighten rear bracket bolts.
11. Check sliding hatch (Figure 8, Item 10) operation and adjust brackets as needed.
12. Apply grease to each gunner hatch slider (Figure 8, Item 4) grease fitting with grease gun.

END OF TASK

WEAPON (SLIDING) HATCH (GUNNER HATCH) REMOVAL AND INSTALLATION - (CONTINUED)

FOLLOW-ON MAINTENANCE

1. Install weapon (sliding) hatch (gunner hatch) inner lock assembly WP 0591.
2. Install outside gunner protection riser (WP 0702).
3. Install gun turret platform (WP 0704).
4. Install turret mounting plate (WP 0705).
5. Remove wheel chocks (TM 9-2355-106-10).

END OF TASK

END OF WORK PACKAGE

FIELD MAINTENANCE

WEAPON (SLIDING) HATCH (GUNNER HATCH) INNER LOCK REMOVAL AND INSTALLATION

INITIAL SETUP:

Tools and Special Tools
General Mechanic's Tool Kit (GMTK) (WP 0795, Item 37)

Materials/Parts
Goggles, industrial (WP 0794, Item 20)
Compound (WP 0794, Item 13)
Gloves (WP 0794, Item 18)
Cotter pin - (2) (WP 0796, Item 50)

References
TM 9-2355-106-10
TM 9-2355-106-23P
WP 0782

Equipment Condition
Parking brake set (TM 9-2355-106-10)
Transmission set in NEUTRAL (N) (TM 9-2355-106-10)
Engine off (TM 9-2355-106-10)
MAIN POWER switch off (TM 9-2355-106-10)
Wheels chocked (TM 9-2355-106-10)

WARNING

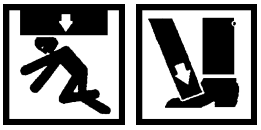

Gunner hatch is extremely heavy. Use caution when opening and closing. Wear safety goggles when removing, installing, or working on interior of gunner hatch. Keep arms and hands clear of gunner hatch when closing. Failure to comply may result in damage to equipment and serious injury or death to personnel.

Gunner sliding hatch can only be opened or closed when vehicle is stationary and on level surface. Do not attempt to open or close the hatch when vehicle is in motion. Make sure latch locks are secured into place in the open or closed positions before vehicle starts moving. Failure to comply may result in damage to equipment and serious injury or death to personnel.

WEAPON (SLIDING) HATCH (GUNNER HATCH) INNER LOCK REMOVAL AND INSTALLATION - (CONTINUED)

LOCK REMOVAL

1. From inside of vehicle, grasp hatch handle (Figure 1, Item 2) and unlatch inner lock assembly (Figure 1, Item 1) of weapon hatch (Figure 1, Item 3).

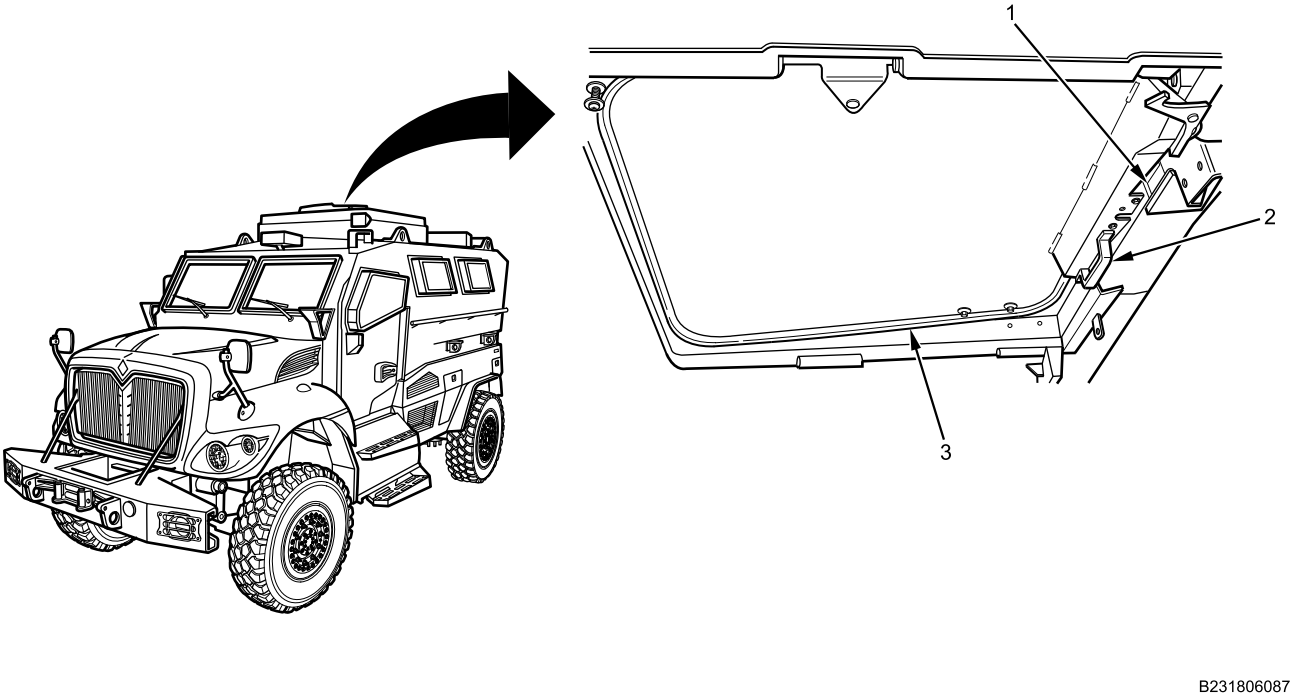

Figure 1. Gunner Hatch Unlatched and Upper Latch Handle in Open Position.

2. Slide weapon hatch (Figure 2, Item 3) open and secure latch hook (Figure 2, Item 5) to rear latch pin (Figure 2, Item 4).

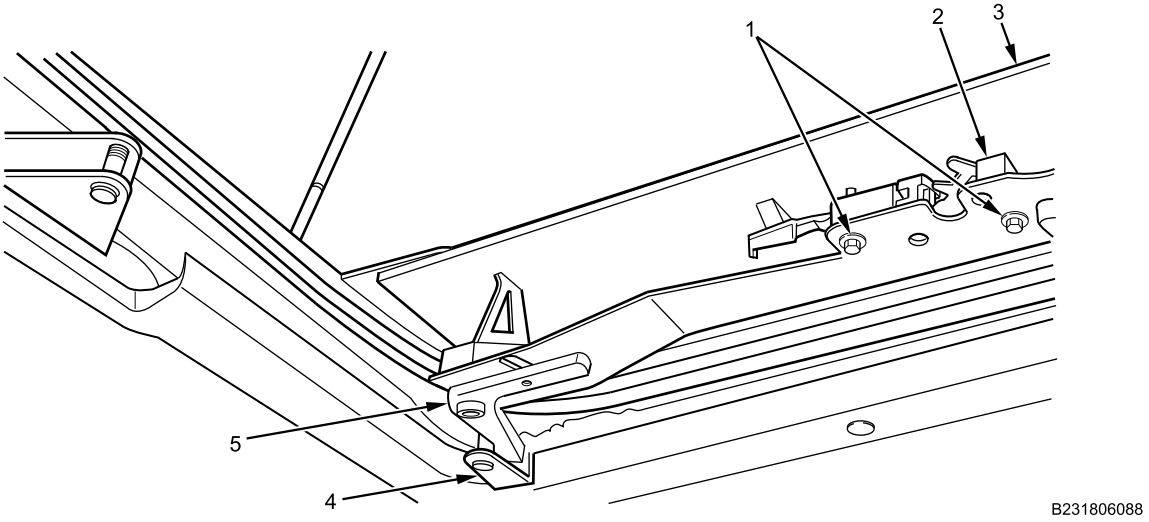

Figure 2. Mounting Hardware and Lock Assembly Removal.

3. Remove two nuts, washers, and bolts (Figure 2, Item 1) from inner lock assembly (Figure 2, Item 2).
4. Remove inner lock assembly (Figure 2, Item 2) from weapon hatch (Figure 2, Item 3).

END OF TASK

WEAPON (SLIDING) HATCH (GUNNER HATCH) INNER LOCK REMOVAL AND INSTALLATION - (CONTINUED)

LATCH HOOK REMOVAL

1. Remove latch hook spring (Figure 3, Item 4) from post (Figure 3, Item 5) on sliding hatch bracket (Figure 3, Item 3).

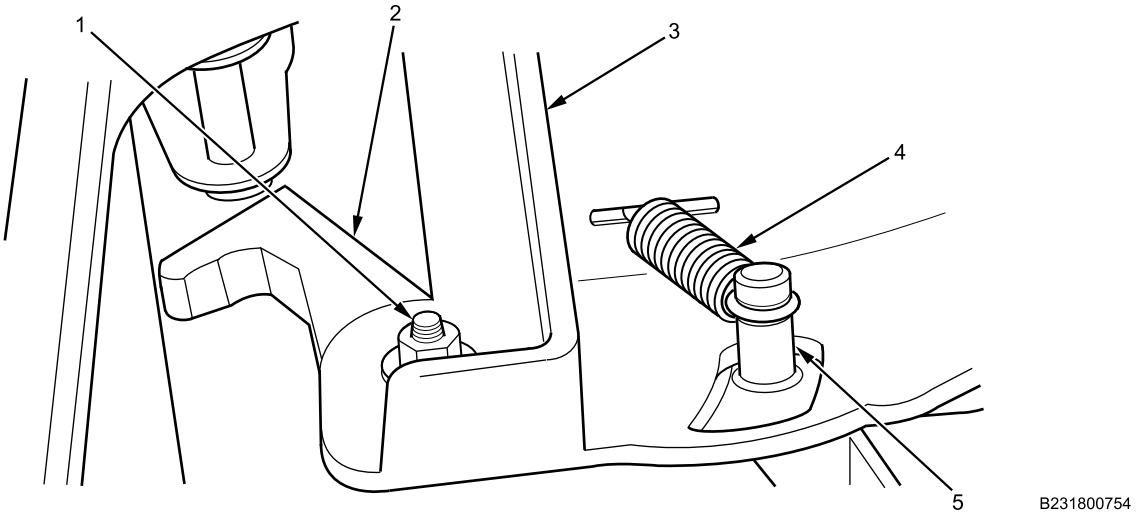

Figure 3. Latch Hook Spring and Latch Hook Removal.

2. Remove nut, washer, and bolt (Figure 3, Item 1) from sliding hatch bracket (Figure 3, Item 3) and remove latch hook (Figure 3, Item 2).

END OF TASK

WEAPON (SLIDING) HATCH (GUNNER HATCH) INNER LOCK REMOVAL AND INSTALLATION - (CONTINUED)

LATCH REMOVAL

1. Remove C-clip (Figure 4, Item 1) or cotter pin (Figure 4, Item 4) from latch pin (Figure 4, Item 2). Discard C-clip or cotter pin.

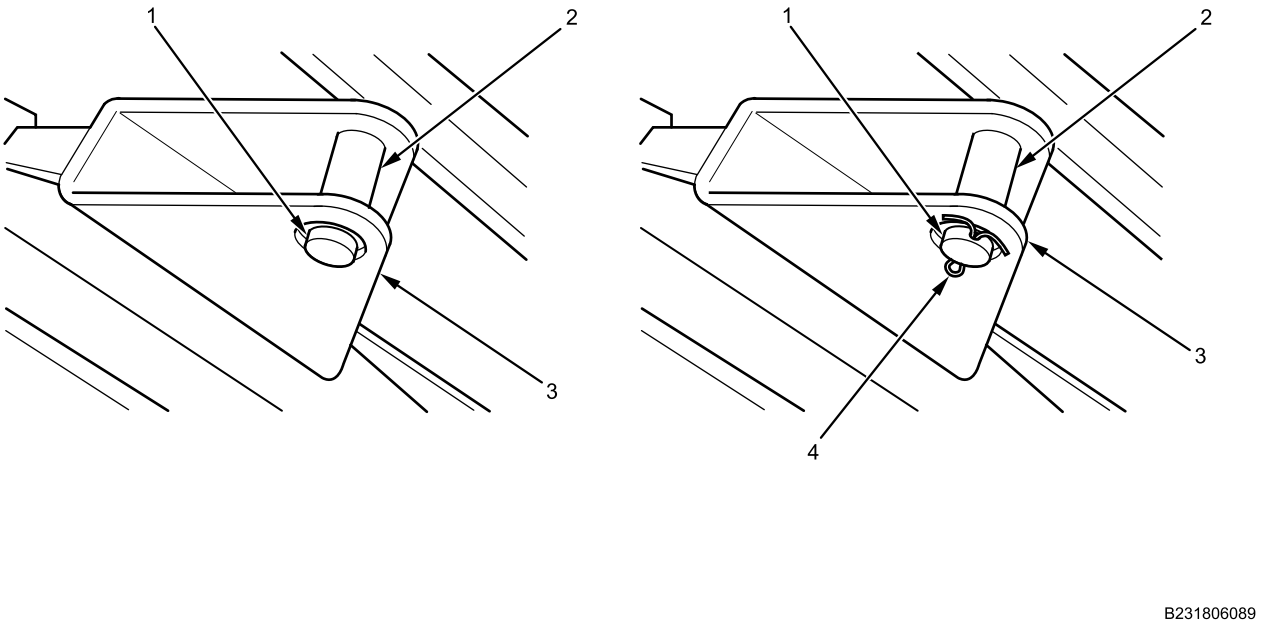

Figure 4. Latch Pin Removed from Bracket.

2. Remove latch pin (Figure 4, Item 2) from angle bracket (Figure 4, Item 3). Discard latch pin if used with C-clip.

END OF TASK

INSTALLATION

WARNING

Corrosion preventive compound is toxic. Use only in well-ventilated area. Do not get in eyes; wear chemical safety goggles and full-face shield when using. Avoid contact with skin and wear rubber or plastic, solvent-resistant gloves. In case of contact, remove contaminated clothing and immediately wash area with soap and water. If compound contacts eyes, flush eyes with large amounts of water for at least 15 minutes and get immediate medical attention. If swallowed, do not induce vomiting; contact a physician immediately. Failure to comply may result in serious injury or death to personnel.

NOTE

If latch pin was previously fastened with C-clip, use a new latch pin and cotter pin.

1. Position latch pin (Figure 5, Item 1) in holes of angle bracket (Figure 5, Item 2).

WEAPON (SLIDING) HATCH (GUNNER HATCH) INNER LOCK REMOVAL AND INSTALLATION - (CONTINUED)

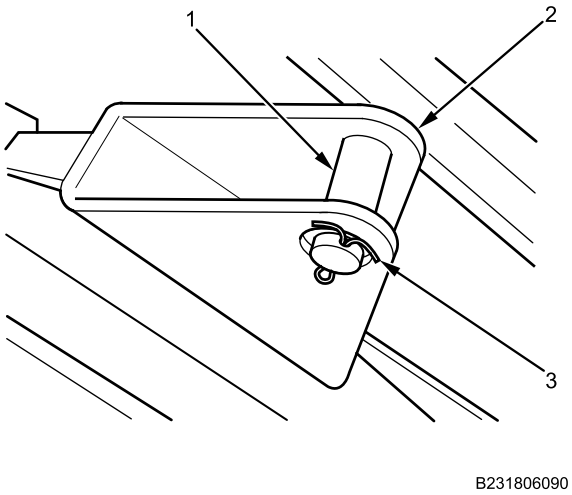

Figure 5. Latch Pin Installed.

2. Secure latch pin (Figure 5, Item 1) on angle bracket (Figure 5, Item 2) with new cotter pin (Figure 5, Item 3).
3. Apply corrosion preventive compound to nut, washer, and mounting bolt (Figure 6, Item 1).

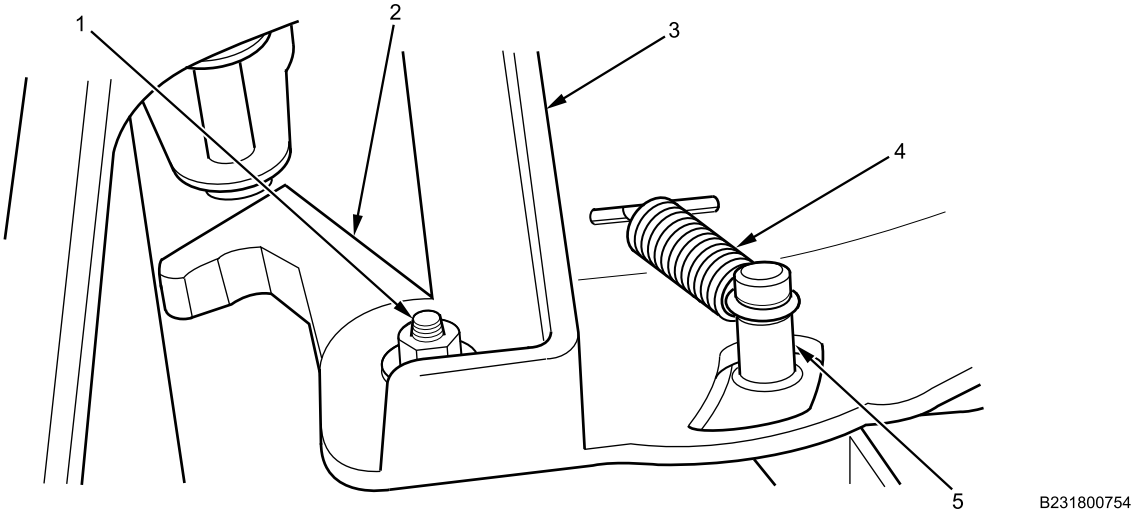

Figure 6. Latch Hook Aligned with Mounting Bolt.

4. Install latch hook (Figure 6, Item 2) on hatch bracket (Figure 6, Item 3) with bolt (Figure 6, Item 1), washer, and nut. Tighten bolt securely.
5. Install latch spring (Figure 6, Item 4) on post (Figure 6, Item 5) fastened to bracket (Figure 6, Item 3).

WEAPON (SLIDING) HATCH (GUNNER HATCH) INNER LOCK REMOVAL AND INSTALLATION - (CONTINUED)

6. Apply corrosion preventive compound to two nuts, washers, and mounting bolts (Figure 7, Item 1).

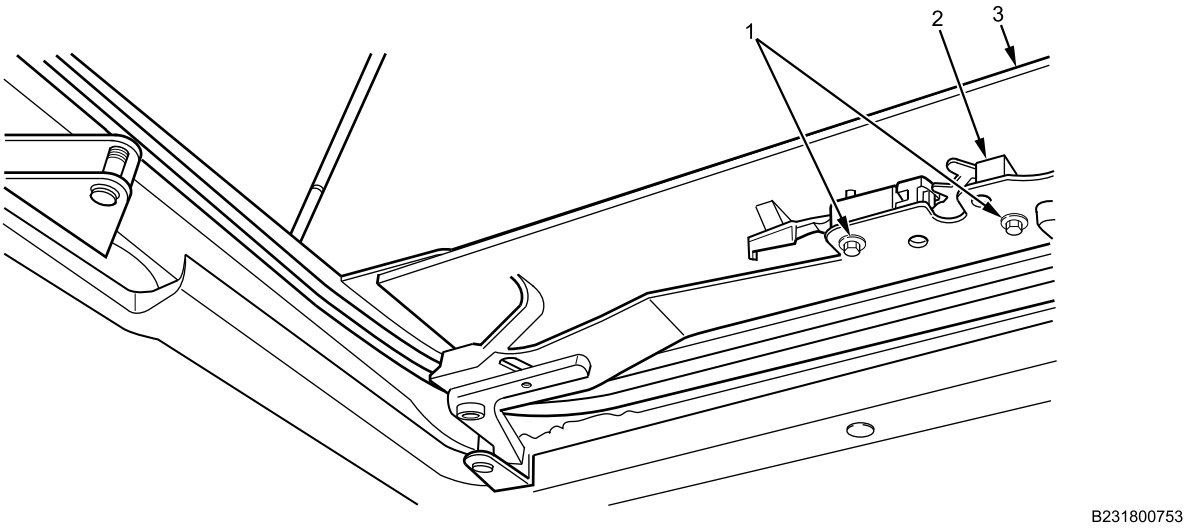

Figure 7. New Lock Assembly Aligned with Mounting Holes.

7. Install inner lock assembly (Figure 7, Item 2) to weapon hatch (Figure 7, Item 3) with two bolts, washers, and nuts (Figure 7, Item 1). Tighten bolts securely.

END OF TASK

FOLLOW-ON MAINTENANCE

1. Verify operation of latch assembly (TM 9-2355-106-10).
2. Remove wheel chocks (TM 9-2355-106-10).

END OF TASK

END OF WORK PACKAGE

FIELD MAINTENANCE

WEAPON (SLIDING) HATCH (GUNNER HATCH) SEAL REMOVAL AND INSTALLATION

INITIAL SETUP:

Tools and Special Tools
General Mechanic's Tool Kit (GMTK) (WP 0795, Item 37)
Knife, utility, retractable (WP 0795, Item 65)

Materials/Parts
Goggles, industrial (WP 0794, Item 20)
Gloves (WP 0794, Item 18)
Rag (WP 0794, Item 39)
Adhesive, weatherstrip (WP 0794, Item 4)

References
TM 9-2355-106-10
TM 9-2355-106-23P
WP 0782

Equipment Condition
Parking brake set (TM 9-2355-106-10)
Transmission set in NEUTRAL (N) (TM 9-2355-106-10)
Engine off (TM 9-2355-106-10)
MAIN POWER switch off (TM 9-2355-106-10)
Wheels chocked (TM 9-2355-106-10)

WARNING

Gunner hatch is extremely heavy. Use caution when opening and closing. Wear safety goggles when removing, installing, or working on interior of gunner hatch. Keep arms and hands clear of gunner hatch when closing. Failure to comply may result in damage to equipment and serious injury or death to personnel.

Gunner sliding hatch can only be opened or closed when vehicle is stationary and on level surface. Do not attempt to open or close the hatch when vehicle is in motion. Make sure latch locks are secured into place in the open or closed positions before vehicle starts moving. Failure to comply may result in damage to equipment and serious injury or death to personnel.

WEAPON (SLIDING) HATCH (GUNNER HATCH) SEAL REMOVAL AND INSTALLATION - (CONTINUED)

REMOVAL

1. Unlatch inside weapon hatch lock mechanism (Figure 1, Item 2).

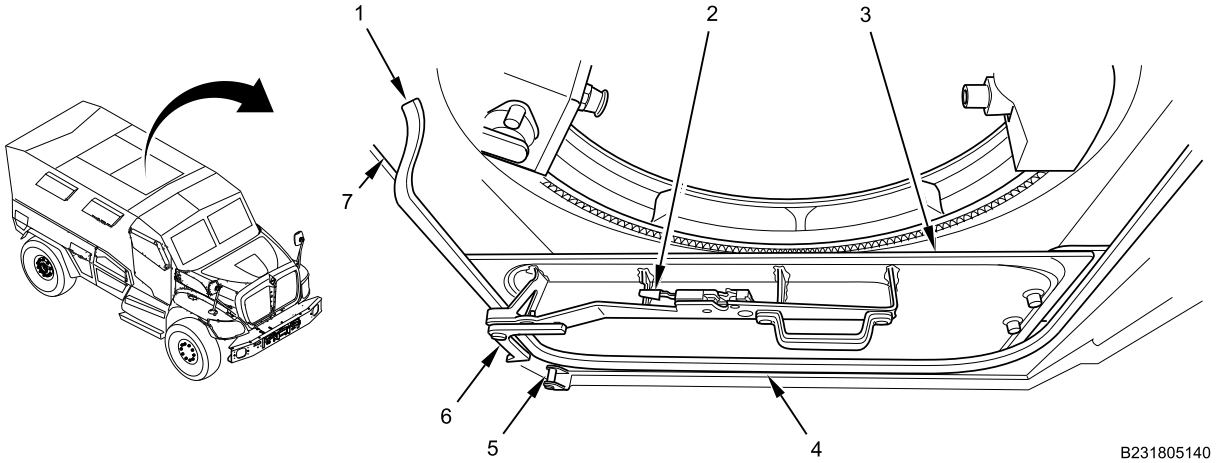

Figure 1. Weapon Hatch Seal Removal.

2. Partially open weapon hatch (Figure 1, Item 3) by sliding until open lock latch (Figure 1, Item 6) is about 2 inches away from catch (Figure 1, Item 5).
3. Cut adhesive at seam (Figure 1, Item 1) of seal (Figure 1, Item 4), using utility knife.
4. Starting at seam (Figure 1, Item 1), manually pull seal (Figure 1, Item 4) from retaining lip (Figure 1, Item 7).
5. Clean dirt and debris from around retaining lip (Figure 1, Item 7), using rag.

END OF TASK

INSTALLATION

WARNING

Adhesives, solvents, and sealing compounds can burn easily, can give off harmful vapors, and are harmful to skin and clothing. Wear goggles and protective clothing. Keep away from open flame and use in well-ventilated area. If adhesive, solvent, or sealing compound get on skin or clothing, wash immediately with soap and water. Failure to comply may result in injury or death to personnel.

1. Starting with seam (Figure 2, Item 5) at right side middle of hatch opening, install seal (Figure 2, Item 4) by manually pressing over retaining lip (Figure 2, Item 1).

WEAPON (SLIDING) HATCH (GUNNER HATCH) SEAL REMOVAL AND INSTALLATION - (CONTINUED)

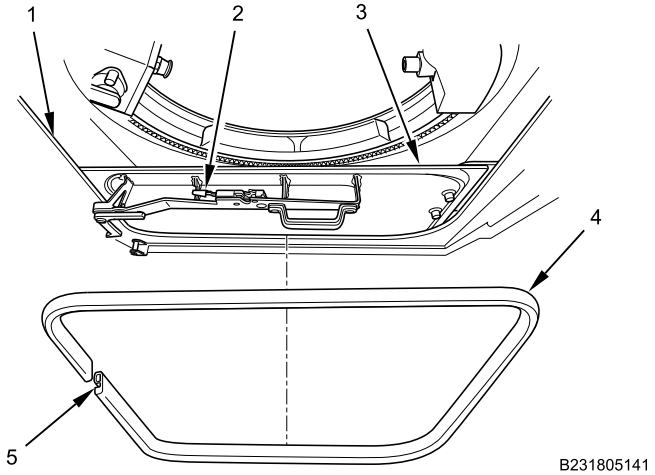

Figure 2. Weapon Hatch Seal Installation.

2. Trim and discard excess seal (Figure 2, Item 4) with utility knife to make tight fitting seam (Figure 2, Item 5).
3. Apply weatherstrip adhesive to seam (Figure 2, Item 5) of seal (Figure 2, Item 4) and allow 15 minutes for adhesive to dry.
4. Slide weapon hatch (Figure 2, Item 3) to closed position and engage latch (Figure 2, Item 2).

END OF TASK

FOLLOW-ON MAINTENANCE

1. Remove wheel chocks (TM 9-2355-106-10).

END OF TASK

END OF WORK PACKAGE

FIELD MAINTENANCE

CABIN EMERGENCY HATCH AND HINGE REMOVAL AND INSTALLATION

INITIAL SETUP:

Tools and Special Tools
General Mechanic's Tool Kit (GMTK) (WP 0795, Item 37)
Lifting sling (WP 0795, Item 68)
Lifting device (WP 0795, Item 67)

Materials/Parts
Compound (WP 0794, Item 13)
Goggles, industrial (WP 0794, Item 20)
Faceshield, industrial (WP 0794, Item 16)
Gloves (WP 0794, Item 18)

Personnel Required
Maintainer - (2)

References
TM 9-2355-106-10
TM 9-2355-106-23P
WP 0782

Equipment Condition
Parking brake set (TM 9-2355-106-10)
Transmission set in NEUTRAL (N) (TM 9-2355-106-10)
Engine off (TM 9-2355-106-10)
MAIN POWER switch off (TM 9-2355-106-10)
Wheels chocked (TM 9-2355-106-10)
Roof armor rear panel removed (WP 0589)
Cabin emergency hatch handle removed (WP 0594)

WARNING

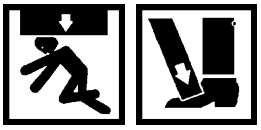

Emergency hatch door is extremely heavy. Use caution and keep arms, hands, and head clear of hatch when opening or closing. Ensure hatch door is properly secured in both the open or closed position. Do not operate vehicle with emergency roof hatch open. Failure to comply may result in serious injury or death to personnel.

Use lifting device capable of lifting 1000 lbs to lift emergency hatch from vehicle. Clear all nonessential personnel from area when lifting hatch from vehicle. Do not stand directly under hatch door while lowering to floor. Failure to comply may result in damage to equipment and serious injury or death to personnel.

Armor parts are heavy. Use care when removing or installing. Do not attempt to lift without an assistant and lifting device. Failure to comply may result in serious injury or death to personnel.

NOTE

Cabin emergency hatch removal and installation task instructions should be discussed prior to starting the hatch replacement task to ensure personnel understand instructions.

CABIN EMERGENCY HATCH AND HINGE REMOVAL AND INSTALLATION - (CONTINUED)

REMOVAL

NOTE

Note location, quantity, and thickness of spacers at each hinge to aid installation.

1. With assistant, use lifting device and lifting sling to secure emergency hatch (Figure 1, Item 4).

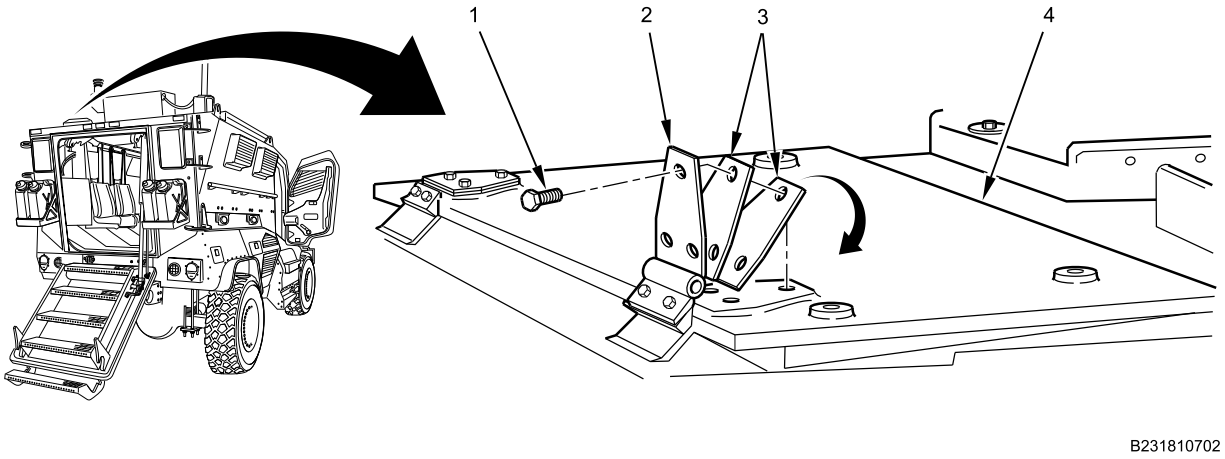

Figure 1. Emergency Hatch Removal from Vehicle.

2. Remove six bolts (Figure 1, Item 1) and spacers (Figure 1, Item 3) securing hinges (Figure 1, Item 2) to emergency hatch (Figure 1, Item 4).
3. With assistant, lift and remove emergency hatch (Figure 1, Item 4).

CABIN EMERGENCY HATCH AND HINGE REMOVAL AND INSTALLATION - (CONTINUED)

NOTE

Note location, quantity, and thickness of spacers at each hinge to aid installation.

4. Remove four bolts (Figure 2, Item 1), two hinges (Figure 2, Item 2), spacers (Figure 2, Item 3), and two nut plates (Figure 2, Item 4).

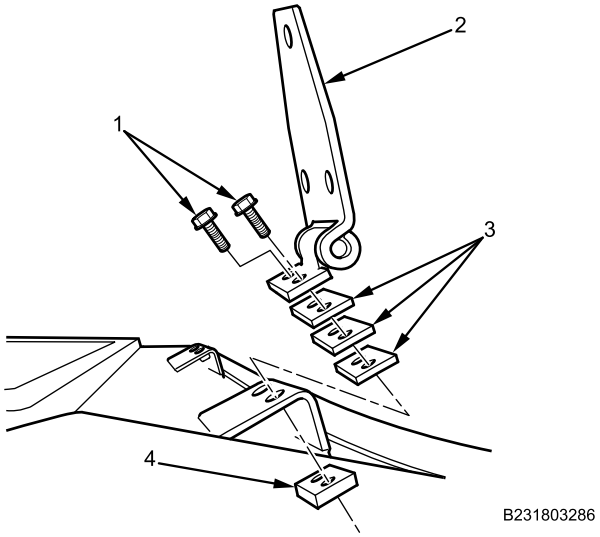

Figure 2. Emergency Hatch Hinges.

END OF TASK

CABIN EMERGENCY HATCH AND HINGE REMOVAL AND INSTALLATION - (CONTINUED)

INSTALLATION

WARNING

Corrosion preventive compound is toxic. Use only in well-ventilated area. Do not get in eyes; wear chemical safety goggles and full-face shield when using. Avoid contact with skin and wear rubber or plastic, solvent-resistant gloves. In case of contact, remove contaminated clothing and immediately wash area with soap and water. If compound contacts eyes, flush eyes with large amounts of water for at least 15 minutes and get immediate medical attention. If swallowed, do not induce vomiting; contact a physician immediately. Failure to comply may result in serious injury or death to personnel.

NOTE

Use spacers as noted during removal.

1. Apply corrosion preventive compound on four bolts (Figure 3, Item 1).

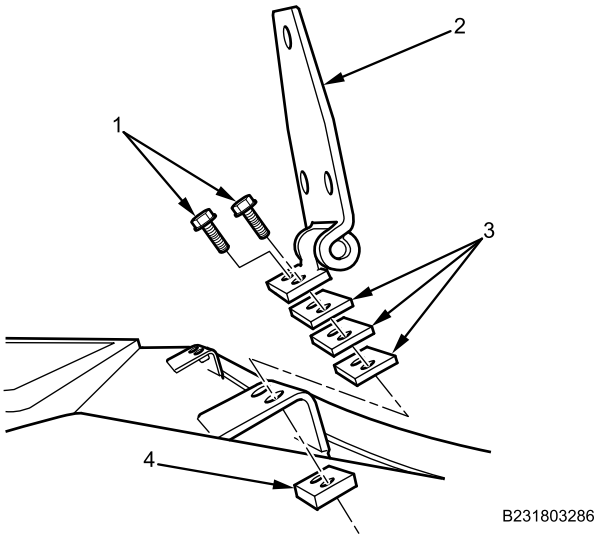

Figure 3. Emergency Hatch Hinges.

2. Install spacers (Figure 3, Item 3), two hinges (Figure 3, Item 2), two nut plates (Figure 3, Item 4), and four bolts (Figure 3, Item 1). Do not tighten.
3. With maintainer assistance, secure emergency hatch (Figure 4, Item 4) in lifting sling.

CABIN EMERGENCY HATCH AND HINGE REMOVAL AND INSTALLATION - (CONTINUED)

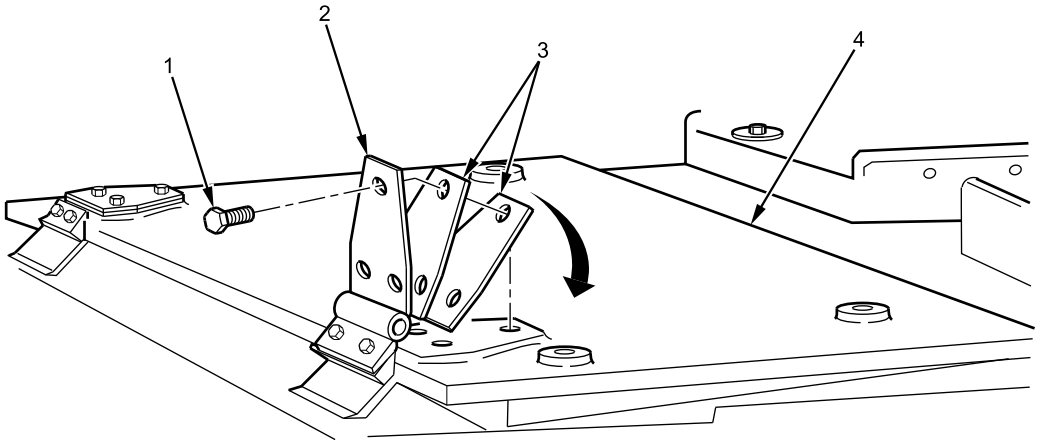

Figure 4. Emergency Hatch Installation on Vehicle.

4. With maintainer assistance, use lifting device to position emergency hatch (Figure 4, Item 4) in mounting location on roof.
5. Apply corrosion preventive compound to six bolts (Figure 4, Item 1).

NOTE

Use spacers as noted during removal.

6. Position spacers (Figure 4, Item 3) and hinges (Figure 4, Item 2) on emergency hatch (Figure 4, Item 4).
7. Install six bolts (Figure 4, Item 1). Do not tighten.
8. Remove sling from emergency hatch (Figure 4, Item 4).
9. Align emergency hatch (Figure 4, Item 4) for proper fit.
10. Tighten all hinge bolts (Figure 3, Item 1) and (Figure 4, Item 1).

CABIN EMERGENCY HATCH AND HINGE REMOVAL AND INSTALLATION - (CONTINUED)

NOTE

Emergency hatch should operate smoothly and not bind, stick, or otherwise be difficult to open.

11. Close emergency hatch (Figure 5, Item 1). If emergency hatch does not operate as specified, realign emergency hatch hinges until proper alignment and operation are achieved.

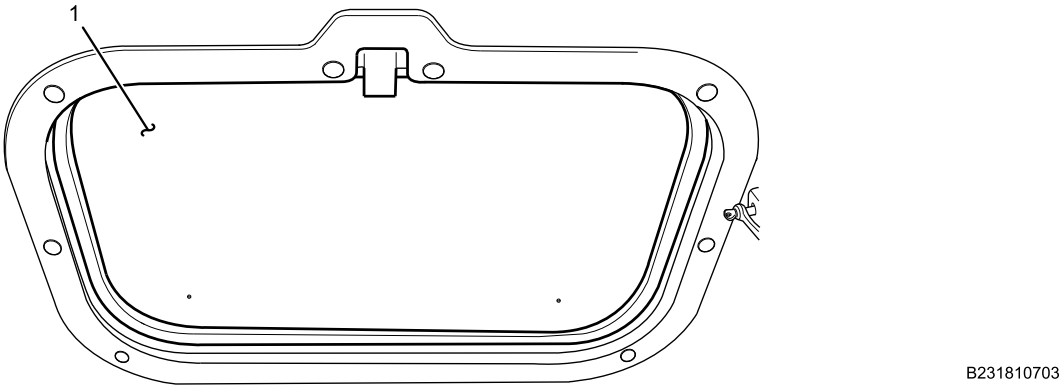

Figure 5. Emergency Hatch Closed.

END OF TASK

FOLLOW-ON MAINTENANCE

1. Install cabin emergency hatch handle (WP 0594).
2. Verify emergency hatch operation (TM 9-2355-106-10).
3. Install roof armor rear panel (WP 0589).
4. Remove wheel chocks (TM 9-2355-106-10).

END OF TASK

END OF WORK PACKAGE

FIELD MAINTENANCE

CABIN EMERGENCY HATCH HANDLE/LOCK ASSEMBLY REMOVAL AND INSTALLATION

INITIAL SETUP:

Tools and Special Tools
General Mechanic's Tool Kit (GMTK) (WP 0795, Item 37)

References
TM 9-2355-106-10
TM 9-2355-106-23P
WP 0786
WP 0782

Equipment Condition
Parking brake set (TM 9-2355-106-10)
Transmission set in NEUTRAL (N) (TM 9-2355-106-10)
Engine off (TM 9-2355-106-10)
MAIN POWER switch off (TM 9-2355-106-10)
Wheels chocked (TM 9-2355-106-10)

WARNING

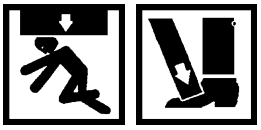

Emergency hatch door is extremely heavy. Use caution and keep arms, hands, and head clear of hatch when opening or closing. Ensure hatch door is properly secured in both the open or closed position. Do not operate vehicle with emergency roof hatch open. Failure to comply may result in serious injury or death to personnel.

CABIN EMERGENCY HATCH HANDLE/LOCK ASSEMBLY REMOVAL AND INSTALLATION - (CONTINUED)

REMOVAL

1. Remove two bolts (Figure 1, Item 1) and nuts from hatch cover weld bracket (Figure 1, Item 2) and remove flexible grab handle (Figure 1, Item 4) from bracket.

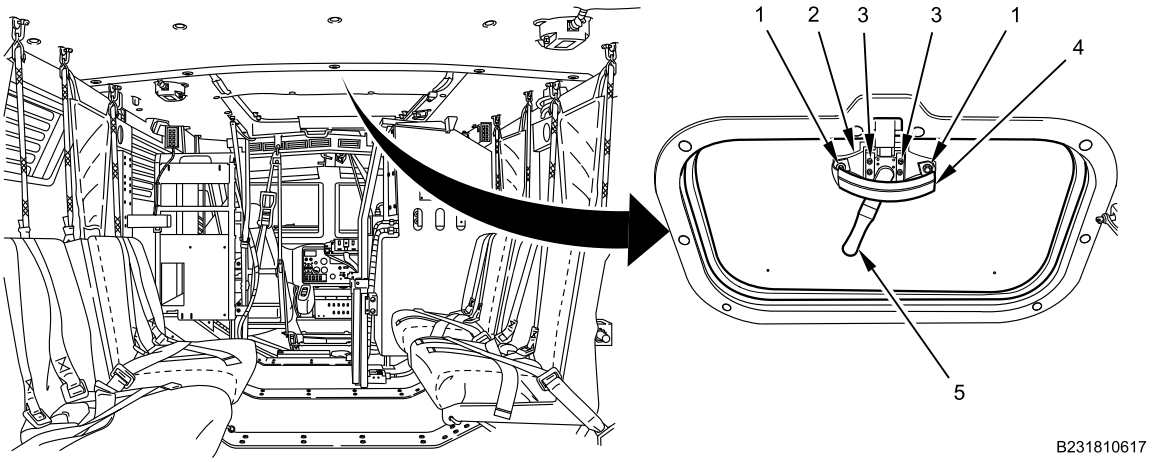

Figure 1. Grab Handle and Lock Assembly Removal.

2. Remove six screws (Figure 1, Item 3) securing emergency hatch handle/lock assembly (Figure 1, Item 5) to hatch cover bracket (Figure 1, Item 2).
3. Remove hatch handle/lock assembly (Figure 1, Item 5) from hatch cover bracket.

END OF TASK

INSTALLATION

1. Install emergency hatch handle/lock assembly (Figure 2, Item 5) on hatch cover weld bracket (Figure 2, Item 2) with six screws (Figure 2, Item 3). Tighten screws securely.

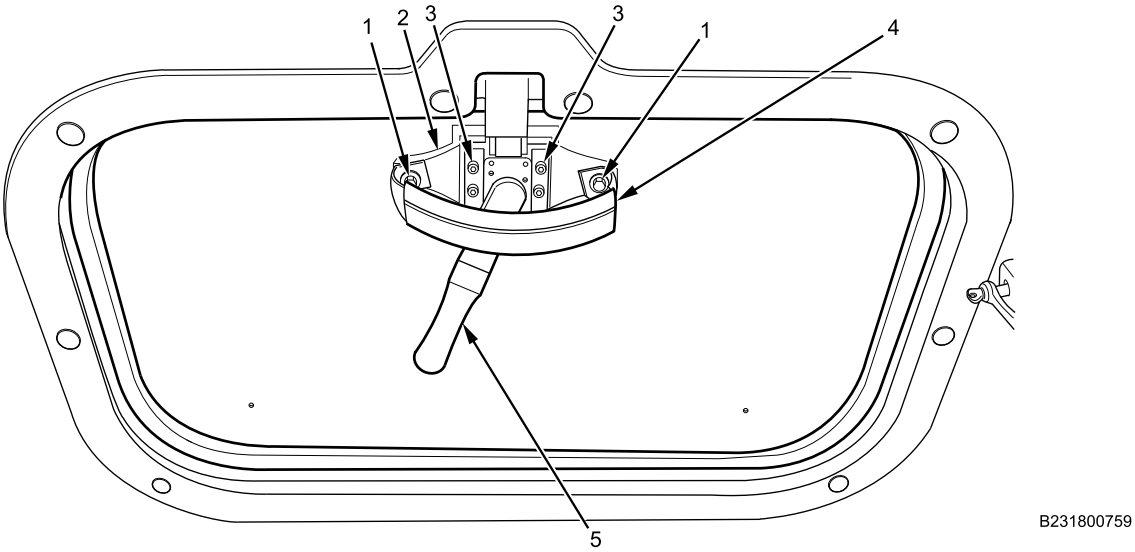

Figure 2. Emergency Hatch Handle/Lock Assembly and Grab Handle Installation.

CABIN EMERGENCY HATCH HANDLE/LOCK ASSEMBLY REMOVAL AND INSTALLATION - (CONTINUED)

2. Install flexible grab handle (Figure 2, Item 4) on hatch cover bracket (Figure 2, Item 2) with two bolts (Figure 2, Item 1) and nuts. Tighten bolts securely.

END OF TASK

FOLLOW-ON MAINTENANCE

1. Verify operation of emergency hatch handle assembly and lock (TM 9-2355-106-10).
2. Remove wheel chocks (TM 9-2355-106-10).

END OF TASK

END OF WORK PACKAGE

FIELD MAINTENANCE

CABIN EMERGENCY HATCH SEAL REMOVAL AND INSTALLATION

INITIAL SETUP:

Tools and Special Tools
General Mechanic's Tool Kit (GMTK) (WP 0795, Item 37)
Knife, utility, retractable (WP 0795, Item 65)
Belly Armor Removal/Installer Kit (WP 0795, Item 16)

Materials/Parts
Goggles, industrial (WP 0794, Item 20)
Gloves (WP 0794, Item 18)
Rag (WP 0794, Item 39)
Adhesive (WP 0794, Item 4)

References
TM 9-2355-106-10
TM 9-2355-106-23P
WP 0782

Equipment Condition
Parking brake set (TM 9-2355-106-10)
Transmission set in NEUTRAL (N) (TM 9-2355-106-10)
Engine off (TM 9-2355-106-10)
MAIN POWER switch off (TM 9-2355-106-10)
Wheels chocked (TM 9-2355-106-10)
Emergency hatch open (TM 9-2355-106-10)

WARNING

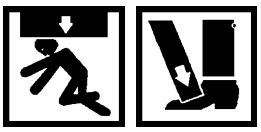

Emergency hatch door is extremely heavy. Use caution and keep arms, hands, and head clear of hatch when opening or closing. Ensure hatch door is properly secured in both the open or closed position. Do not operate vehicle with emergency roof hatch open. Failure to comply may result in serious injury or death to personnel.

REMOVAL

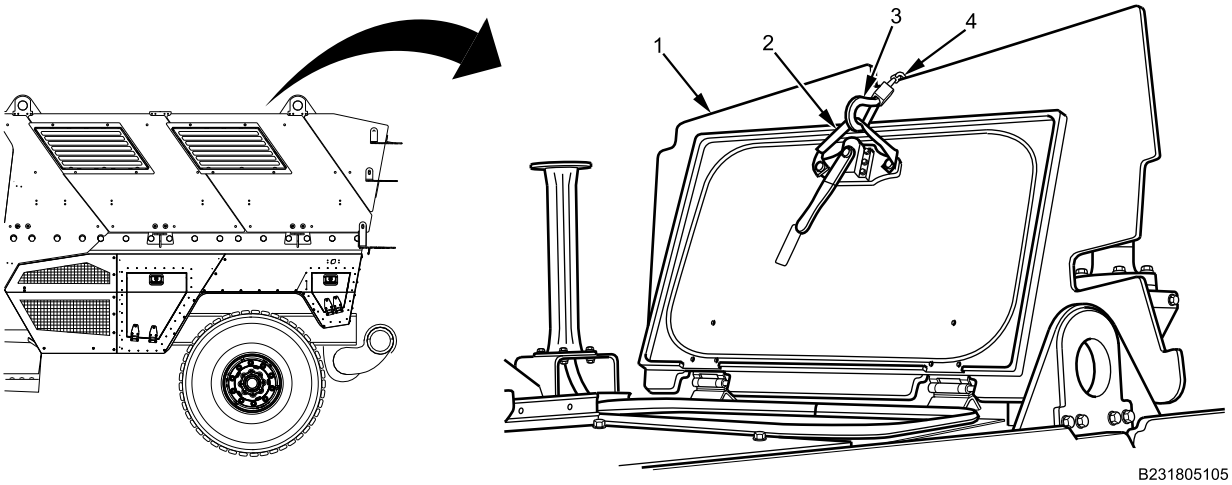

Figure 1. Attaching Chain Hoist to Hatch Handle.

1. Secure hatch (Figure 1, Item 1) in open position with chain hoist (Figure 1, Item 4) by attaching one end (Figure 1, Item 3) to emergency hatch handle (Figure 1, Item 2).

CABIN EMERGENCY HATCH SEAL REMOVAL AND INSTALLATION - (CONTINUED)

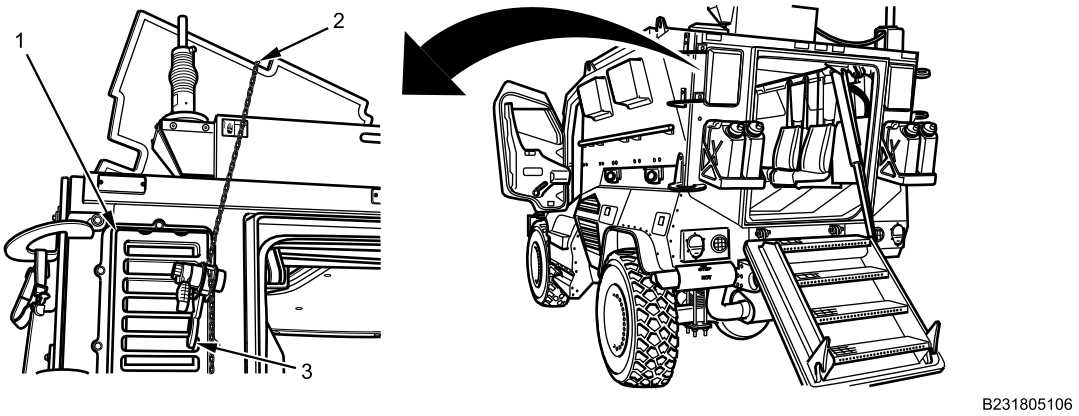

Figure 2. Attaching Chain Hoist to Riot Guard.

2. Attach opposite end (Figure 2, Item 3) of chain hoist (Figure 2, Item 2) to left rear window riot guard (Figure 2, Item 1).

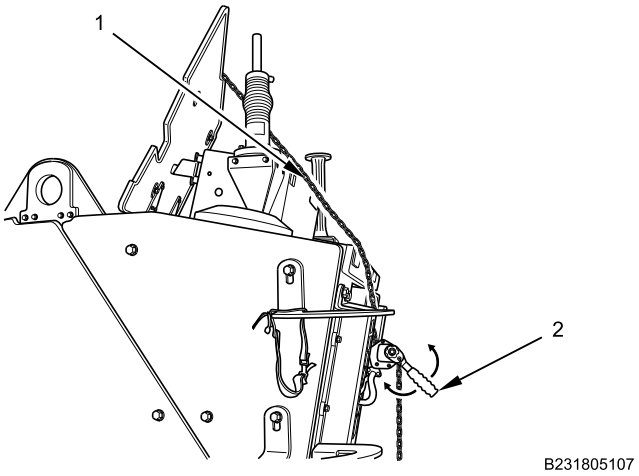

Figure 3. Tightening Chain Hoist.

CAUTION

Do not overtighten the chain hoist. Only light tension is needed. Failure to comply may result in damage to the emergency hatch and handle.

3. Tighten chain hoist (Figure 3, Item 1) by moving ratchet handle (Figure 3, Item 2) back and forth just until strap (Figure 3, Item 1) becomes snug.

CABIN EMERGENCY HATCH SEAL REMOVAL AND INSTALLATION - (CONTINUED)

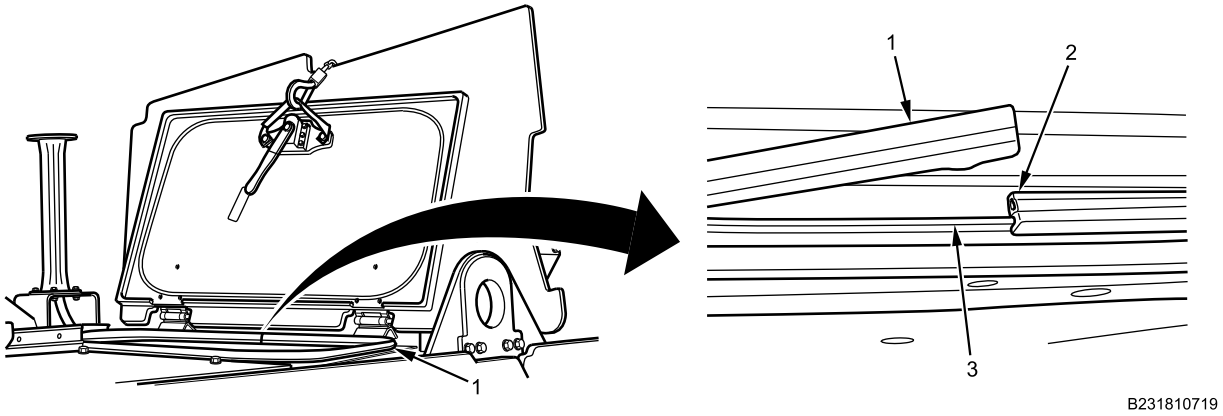

Figure 4. Emergency Hatch Seal Removal.

4. Cut adhesive at seam (Figure 4, Item 2) of emergency hatch opening seal (Figure 4, Item 1), using utility knife.
5. Starting at seam (Figure 4, Item 2), remove seal (Figure 4, Item 1) from retaining lip (Figure 4, Item 3).
6. Clean dirt and debris from around retaining lip (Figure 4, Item 3), using rag.

END OF TASK

INSTALLATION

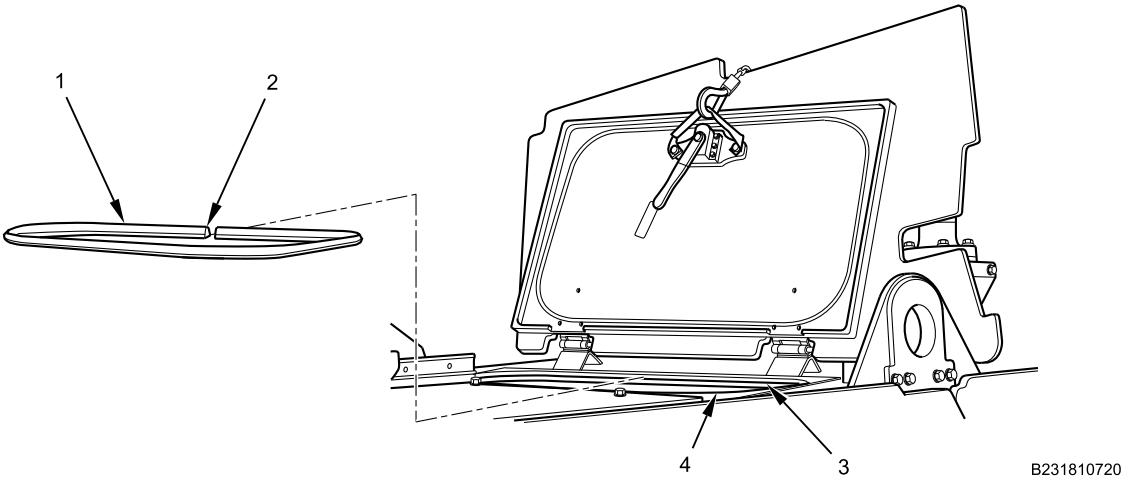

Figure 5. Emergency Hatch Seal Installation.

1. Starting at the middle of hinge side of emergency hatch opening (Figure 5, Item 4), install seal (Figure 5, Item 1) around opening by pressing onto retaining lip (Figure 5, Item 3).
2. Trim and discard excess seal (Figure 5, Item 1) with utility knife to make a tight fitting seam (Figure 5, Item 2).

CABIN EMERGENCY HATCH SEAL REMOVAL AND INSTALLATION - (CONTINUED)

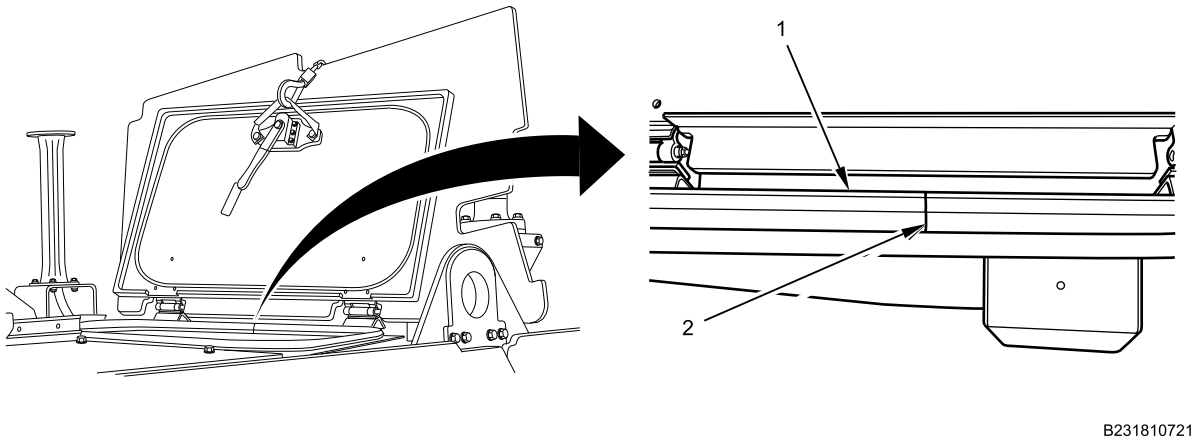

Figure 6. Emergency Hatch Seal Seam Adhesive Application.

WARNING

Adhesives, solvents, and sealing compounds can burn easily, can give off harmful vapors, and are harmful to skin and clothing. Wear goggles and protective clothing. Keep away from open flame and use in well-ventilated area. If adhesive, solvent, or sealing compound get on skin or clothing, wash immediately with soap and water. Failure to comply may result in injury or death to personnel.

3. Apply weatherstrip adhesive to seam (Figure 6, Item 2) of seal (Figure 6, Item 1) and allow 15 minutes for adhesive to dry.

CABIN EMERGENCY HATCH SEAL REMOVAL AND INSTALLATION - (CONTINUED)

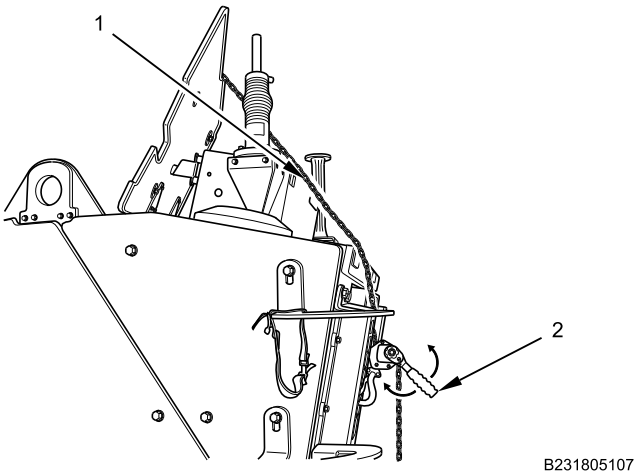

Figure 7. Loosening Chain Hoist.

4. Release chain hoist (Figure 7, Item 1) lock lever and loosen by moving ratchet handle (Figure 7, Item 2) back and forth.

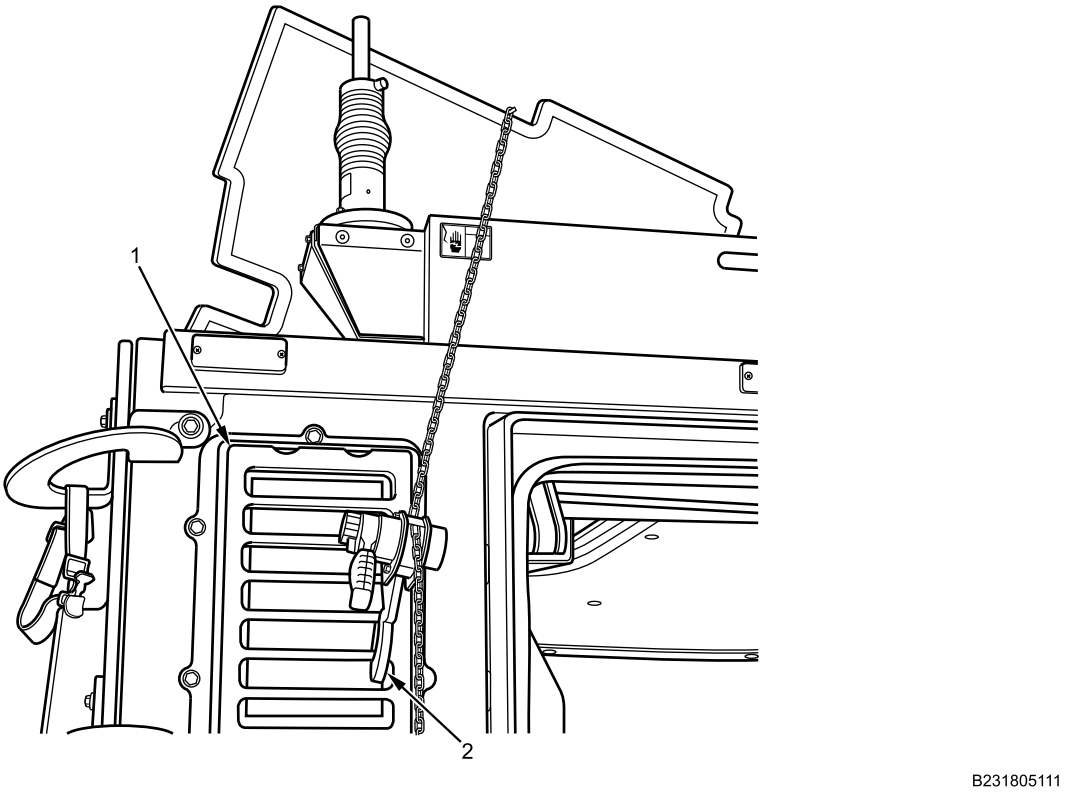

Figure 8. Removing Chain Hoist from Riot Guard.

5. Remove chain hoist end (Figure 8, Item 2) from left rear window riot guard (Figure 8, Item 1).

CABIN EMERGENCY HATCH SEAL REMOVAL AND INSTALLATION - (CONTINUED)

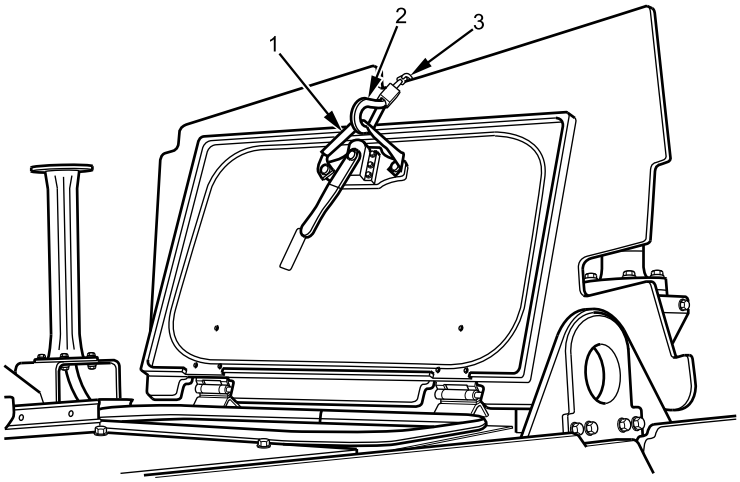

B231805112

Figure 9. Removing Chain Hoist from Hatch Handle.

6. Remove opposite end (Figure 9, Item 2) of chain hoist (Figure 9, Item 3) from emergency hatch handle (Figure 9, Item 1).

END OF TASK

FOLLOW-ON MAINTENANCE

1. Close and secure emergency hatch (TM 9-2355-106-10).
2. Remove wheel chocks (TM 9-2355-106-10).

END OF TASK

END OF WORK PACKAGE

FIELD MAINTENANCE

HULL GUN PORT REMOVAL AND INSTALLATION

INITIAL SETUP:

Tools and Special Tools
General Mechanic's Tool Kit (GMTK) (WP 0795, Item 37)
Punch, 3/8 inch, 3/16 inch pt (WP 0795, Item 81)

References
TM 9-2355-106-10
TM 9-2355-106-23P
WP 0782

Equipment Condition
Parking brake set (TM 9-2355-106-10)
Transmission set in NEUTRAL (N) (TM 9-2355-106-10)
Engine off (TM 9-2355-106-10)
MAIN POWER switch off (TM 9-2355-106-10)
Wheels chocked (TM 9-2355-106-10)
Cabin door open and secured (WP 0608)

REMOVAL

WARNING

Cabin door must be secured in the open position by using heavy duty winch straps to prevent accidental closure during vehicle maintenance. Pull door hinge pin prior to securing door open. Failure to comply may result in serious injury or death to personnel.

Use the appropriate lifting strap sling or chain hoist for the type of load. Always clean and inspect lifting strap slings and chain hoists prior to use. Inspect for damage such as wear, corrosion, elongation, tears, or punctures. Replace lifting strap slings or chain hoists that are damaged. Failure to comply may result in component damage and death or injury to personnel.

Cabin doors are heavy. Ensure that no one is standing directly behind the door before opening and closing it. Ensure that hands and feet are clear of the area before closing the door. Use caution when opening or closing the doors, especially when the vehicle is parked on an incline. Failure to comply may result in injury to personnel.

HULL GUN PORT REMOVAL AND INSTALLATION - (CONTINUED)

1. Open internal gun port cover (Figure 1, Item 4).

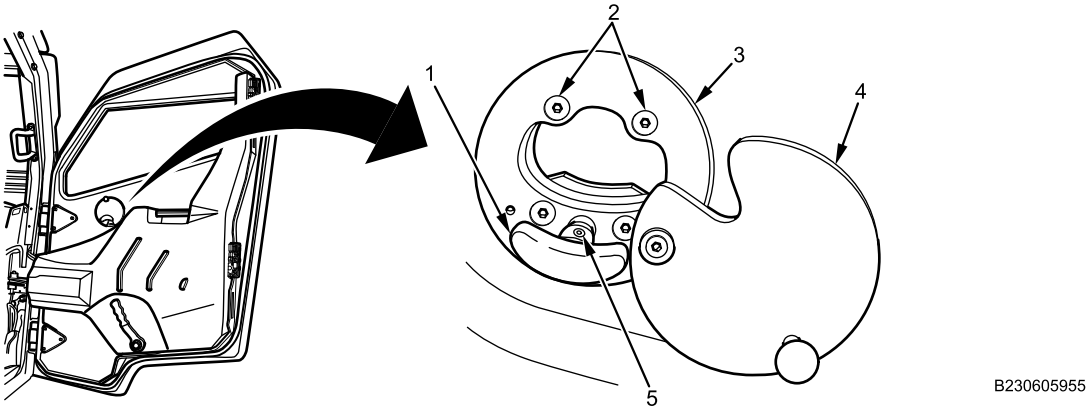

Figure 1. Internal Gun Port in Open Position.

2. Using punch, remove drift pin (Figure 1, Item 5) and internal gun port knob (Figure 1, Item 1).
3. Remove four screws (Figure 1, Item 2) from internal gun port assembly (Figure 1, Item 3) and remove internal gun port from vehicle.
4. Open external gun port cover (Figure 2, Item 1).

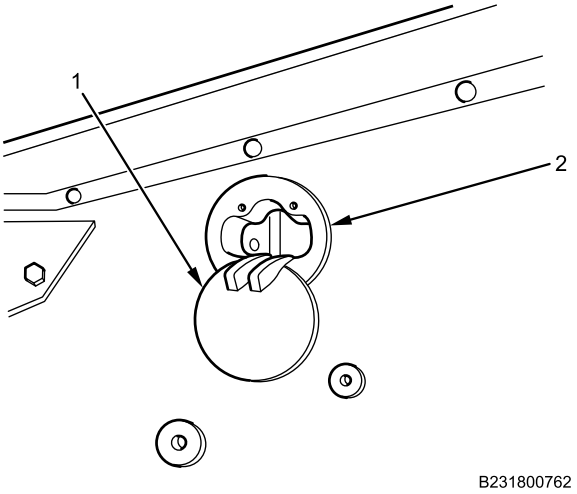

Figure 2. External Gun Port in Open Position.

5. Remove external gun port assembly (Figure 2, Item 2) from vehicle locator hole.

END OF TASK

HULL GUN PORT REMOVAL AND INSTALLATION - (CONTINUED)

INSTALLATION

1. Position external gun port assembly (Figure 3, Item 2) in locator hole on outside of vehicle. Ensure external gun port cover (Figure 3, Item 1) is open.

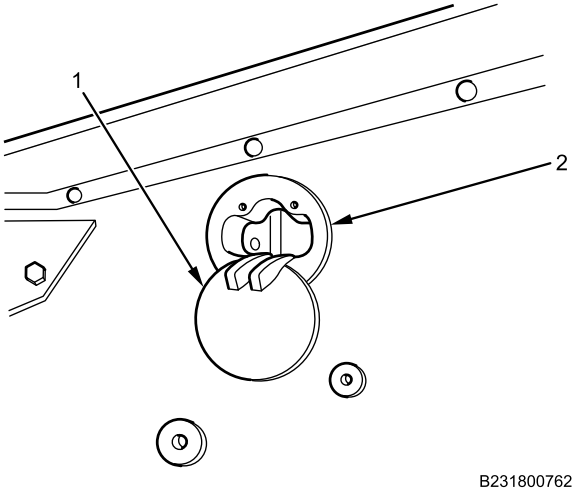

Figure 3. External Gun Port Installation.

2. Position internal gun port in locator hole on inside of vehicle.
3. From inside vehicle, install four screws (Figure 4, Item 2) securing internal gun port to external gun port assembly (Figure 3, Item 2). Tighten screws securely.

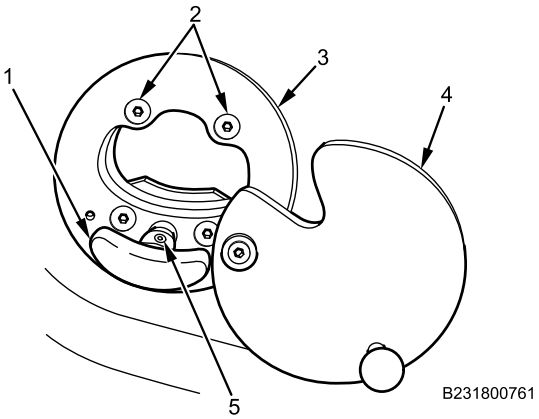

Figure 4. Internal Gun Port Installation

4. Install internal gun port knob (Figure 4, Item 1) on internal gun port assembly (Figure 4, Item 3) and secure with drift pin (Figure 1, Item 5).
5. Close external gun port cover (Figure 3, Item 1).
6. Close internal gun port cover (Figure 4, Item 4).

END OF TASK

HULL GUN PORT REMOVAL AND INSTALLATION - (CONTINUED)

FOLLOW-ON MAINTENANCE

1. Verify proper gun port operation (open and close) (TM 9-2355-106-10).
2. Remove cabin door securing chain hoists and lifting strap (WP 0608).
3. Close cabin door (TM 9-2355-106-10).
4. Remove wheel chocks (TM 9-2355-106-10).

END OF TASK

END OF WORK PACKAGE

FIELD MAINTENANCE

LEFT ENGINE ARMOR PLATE REMOVAL AND INSTALLATION

INITIAL SETUP:

Tools and Special Tools
General Mechanic's Tool Kit (GMTK) (WP 0795, Item 37)
Wrench, torque, 90-600 lb-ft, 3/4-inch drive (WP 0795, Item 144)
Socket, std., impact, 3/4-inch drive, 6 pt, 1-1/8 inch (WP 0795, Item 104)

Materials/Parts
Locknuts - (2) (WP 0796, Item 102)
Locknuts - (2) (WP 0796, Item 149)

References
TM 9-2355-106-10
TM 9-2355-106-23P
WP 0786
WP 0782

Equipment Condition
Parking brake set (TM 9-2355-106-10)
Transmission set in NEUTRAL (N) (TM 9-2355-106-10)
Engine off (TM 9-2355-106-10)
MAIN POWER switch off (TM 9-2355-106-10)
Wheels chocked (TM 9-2355-106-10)
Engine hood open and secured (TM 9-2355-106-10)

WARNING

Engine components become extremely hot during normal operation. Allow engine to cool completely prior to performing maintenance. Use extreme care when working in close quarters in engine compartment. Stay clear of rotating parts. Wear safety goggles, work gloves, and long sleeves or shop coat. Failure to comply may result in serious injury or death to personnel.

Engine hood is extremely heavy and requires two-person lift. Ensure that there is adequate space in front of the vehicle to open hood completely without pinning or pinching personnel between hood and any other structure. Use extreme care when working under hood and make sure it is properly supported. Failure to comply may result in serious injury or death to personnel.

Armor parts are heavy. Use care when removing or installing. Wear gloves. Failure to comply may result in serious injury or death to personnel.

LEFT ENGINE ARMOR PLATE REMOVAL AND INSTALLATION - (CONTINUED)

REMOVAL

NOTE

Reposition tire FSS mounting bracket to allow clearance from lower armor plate.

1. Remove two bolts and hex locknuts (Figure 1, Item 1) from tire FSS bracket (Figure 1, Item 2) and position bracket aside. Discard hex locknuts.

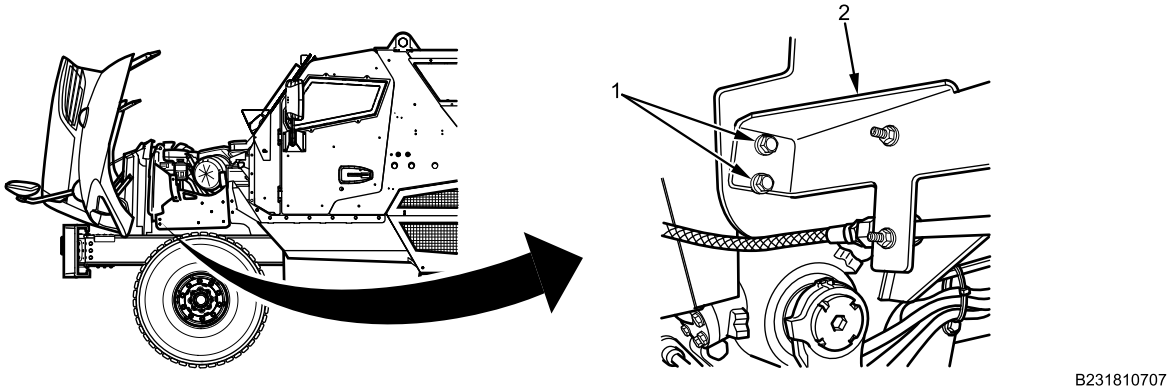

Figure 1. Tire Fire Suppression System (FSS) Bracket.

2. Remove locking pin (Figure 2, Item 3) from power distribution armor plate and position aside.

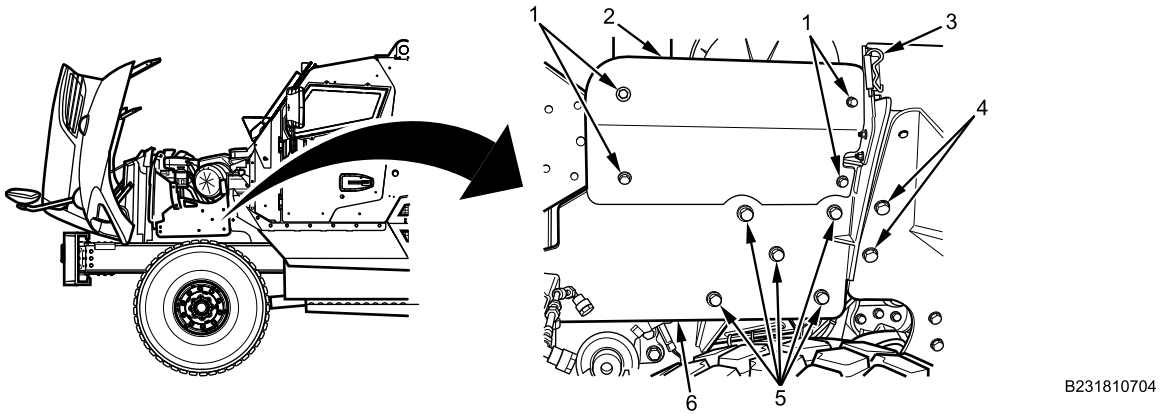

Figure 2. Left Side Engine Armor.

3. Remove four bolts (Figure 2, Item 1) from upper engine armor plate (Figure 2, Item 2). Remove upper engine armor plate.
4. Remove two bolts (Figure 2, Item 4) from wheel deflector armor plate.

LEFT ENGINE ARMOR PLATE REMOVAL AND INSTALLATION - (CONTINUED)

WARNING

Armor plate is heavy. Secure plate before removal of final bolt to prevent plate from falling. Failure to comply may result in damage to equipment and serious injury or death to personnel.

5. Remove five bolts (Figure 2, Item 5) from lower engine armor plate (Figure 2, Item 6). Remove lower engine armor.
6. Remove two bolts and hex locknuts (Figure 3, Item 1) from power distribution armor plate bracket (Figure 3, Item 2). Discard locknuts.

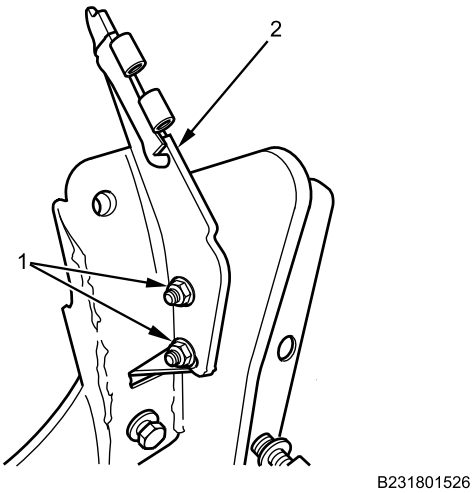

Figure 3. Power Distribution Bracket.

END OF TASK

LEFT ENGINE ARMOR PLATE REMOVAL AND INSTALLATION - (CONTINUED)

INSTALLATION

1. Install power distribution armor plate bracket (Figure 4, Item 2) on lower armor plate with two bolts and new hex locknuts (Figure 4, Item 1). Tighten bolts securely.

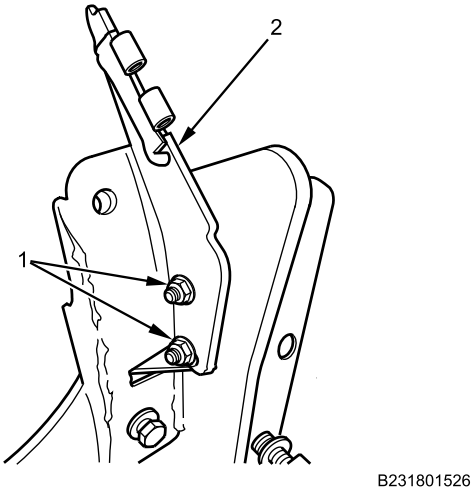

Figure 4. Power Distribution Bracket.

2. Install lower engine armor plate (Figure 5, Item 6) on bracket and loosely install five bolts (Figure 5, Item 5) on lower engine armor and three bolts (Figure 5, Item 4) on wheel deflector. Torque all bolts to 355 lb-ft (481 N•m).

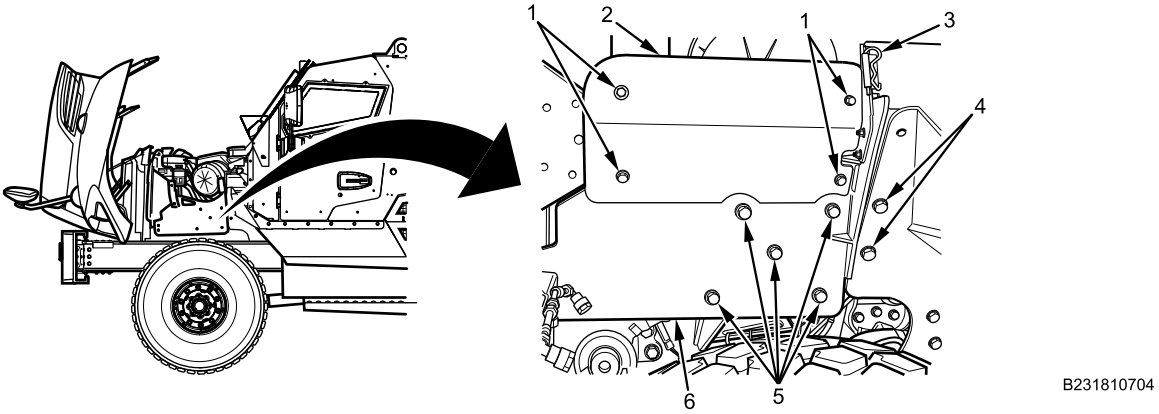

Figure 5. Left Side Engine Armor Plate.

3. Install upper engine armor plate (Figure 5, Item 2) on bracket and loosely install four bolts (Figure 5, Item 1). Torque all bolts to 206 lb-ft (279 N•m).
4. Install locking pin (Figure 5, Item 3) on power distribution armor plate.

LEFT ENGINE ARMOR PLATE REMOVAL AND INSTALLATION - (CONTINUED)

5. Install tire FSS bracket (Figure 6, Item 2) on armor plate with two bolts and new hex locknuts (Figure 6, Item 1). Tighten bolts securely.

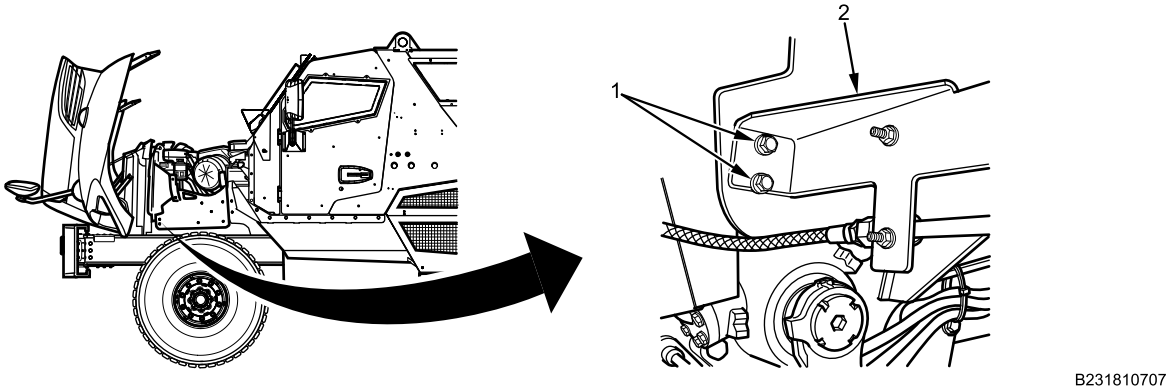

Figure 6. Tire FSS Bracket.

END OF TASK

FOLLOW-ON MAINTENANCE

1. Close and secure engine hood (TM 9-2355-106-10).
2. Remove wheel chocks (TM 9-2355-106-10).

END OF TASK

END OF WORK PACKAGE

FIELD MAINTENANCE

LEFT ENGINE ARMOR PLATE BRACKET REMOVAL AND INSTALLATION

INITIAL SETUP:

Tools and Special Tools
General Mechanic's Tool Kit (GMTK) (WP 0795, Item 37)

Materials/Parts
Locknut - (4) (WP 0796, Item 154)
Compound (WP 0794, Item 13)
Gloves (WP 0794, Item 18)
Goggles, industrial (WP 0794, Item 20)
Face shield, industrial (WP 0794, Item 16)

Personnel Required
Maintainer - (2)

References
TM 9-2355-106-10
TM 9-2355-106-23P
WP 0782

Equipment Condition
Parking brake set (TM 9-2355-106-10)
Transmission set in NEUTRAL (N) (TM 9-2355-106-10)
Engine off (TM 9-2355-106-10)
MAIN POWER switch off (TM 9-2355-106-10)
Wheels chocked (TM 9-2355-106-10)
Engine hood open and secured (TM 9-2355-106-10)
Left side engine armor plate removed (WP 0597)

WARNING

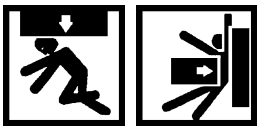

Engine hood is extremely heavy and requires two-person lift. Ensure that there is adequate space in front of the vehicle to open hood completely without pinning or pinching personnel between hood and any other structure. Use extreme care when working under hood and make sure it is properly supported. Failure to comply may result in serious injury or death to personnel.

LEFT ENGINE ARMOR PLATE BRACKET REMOVAL AND INSTALLATION - (CONTINUED)

REMOVAL

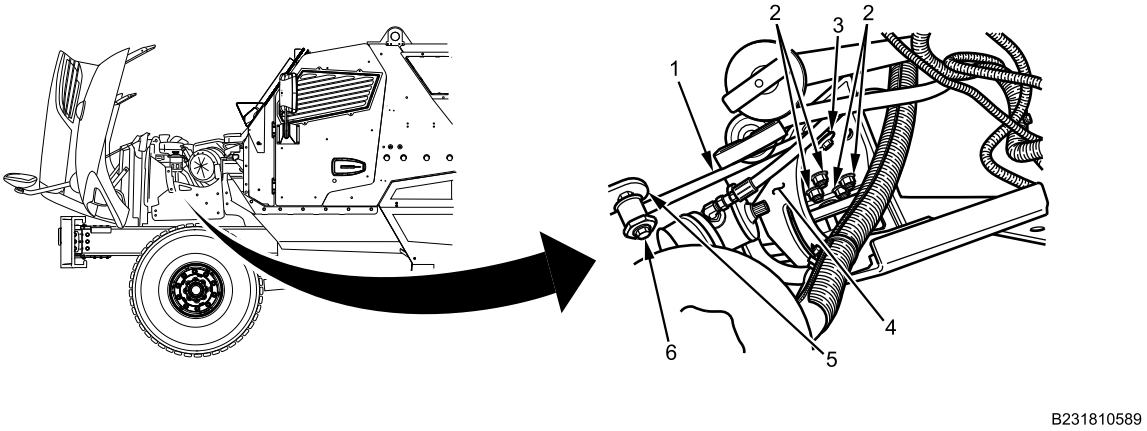

Figure 1. Left Side Engine Armor Plate Bracket.

1. Remove bolt, nut, and washer (Figure 1, Item 3) from radiator support (Figure 1, Item 1) at engine armor plate bracket (Figure 1, Item 4).
2. Remove bolt (Figure 1, Item 6), nut, and washer from radiator support (Figure 1, Item 1) at radiator assembly bracket (Figure 1, Item 5) and remove radiator support.
3. With assistant, support engine armor plate bracket (Figure 1, Item 4) on frame rail.
4. Remove four locknuts (Figure 1, Item 2) from engine armor bracket mounting bolts and remove bracket (Figure 1, Item 4) from frame rail. Discard locknuts.

END OF TASK

INSTALLATION

WARNING

Corrosion preventive compound is toxic. Use only in well-ventilated area. Do not get in eyes; wear chemical safety goggles and full-face shield when using. Avoid contact with skin and wear rubber or plastic, solvent-resistant gloves. In case of contact, remove contaminated clothing and immediately wash area with soap and water. If compound contacts eyes, flush eyes with large amounts of water for at least 15 minutes and get immediate medical attention. If swallowed, do not induce vomiting; contact a physician immediately. Failure to comply may result in serious injury or death to personnel.

1. Apply corrosion preventive compound on all radiator support and engine armor plate bracket mounting bolt threads.

LEFT ENGINE ARMOR PLATE BRACKET REMOVAL AND INSTALLATION - (CONTINUED)

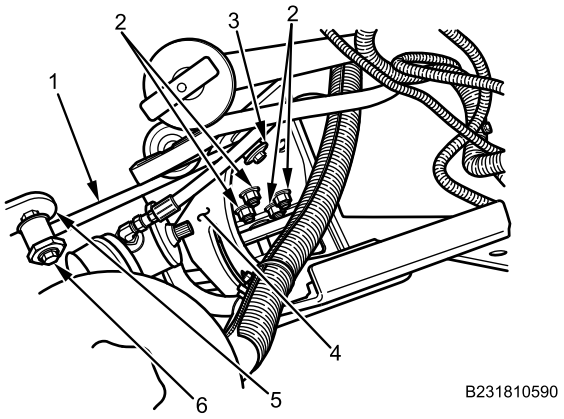

Figure 2. Left Side Engine Armor Plate Bracket.

2. With assistant, position engine armor plate bracket (Figure 2, Item 4) on frame rail.
3. Install engine armor plate bracket (Figure 2, Item 4) with four bolts and four new locknuts (Figure 2, Item 2). Tighten securely.
4. Install radiator support (Figure 2, Item 1) on radiator assembly bracket (Figure 2, Item 5) with bolt (Figure 2, Item 6), nut, and washer. Do not tighten.
5. Install radiator support (Figure 2, Item 1) on engine armor plate bracket (Figure 2, Item 4) with bolt, nut, and washer (Figure 2, Item 3). Tighten all nuts and bolts securely.

END OF TASK

FOLLOW-ON MAINTENANCE

1. Install left side engine armor plate (WP 0597).
2. Close engine hood (TM 9-2355-106-10).
3. Remove wheel chocks (TM 9-2355-106-10).

END OF TASK

END OF WORK PACKAGE

FIELD MAINTENANCE

RIGHT ENGINE ARMOR PLATE REMOVAL AND INSTALLATION

INITIAL SETUP:

Tools and Special Tools
General Mechanic's Tool Kit (GMTK) (WP 0795, Item 37)
Wrench, torque, 3/4-inch drive, 90-600 lb-ft (WP 0795, Item 144)
C-clamp, deep throat, 0-6 inch capacity (WP 0795, Item 24)
Hammer, hand, soft face, dead blow, 52 oz (WP 0795, Item 45)
Adapter, socket, wrench drive, 3/4-inch female - 1/2-inch male (WP 0795, Item 4)

Materials/Parts
Goggles, industrial (WP 0794, Item 20)
Face shield, industrial (WP 0794, Item 16)
Gloves, leather (WP 0794, Item 19)
Gloves (WP 0794, Item 18)
Locknut - (2) (WP 0796, Item 54)

Personnel Required
Maintainer (2)

References
TM 9-2355-106-10
TM 9-2355-106-23P
WP 0786
WP 0782

Equipment Condition
Parking brake set (TM 9-2355-106-10)
Transmission set in NEUTRAL (N) (TM 9-2355-106-10)
Engine off (TM 9-2355-106-10)
MAIN POWER switch off (TM 9-2355-106-10)
Wheels chocked (TM 9-2355-106-10)
Engine hood open and secured (TM 9-2355-106-10)
Windshield washer reservoir and bracket removed (WP 0686)

WARNING

Engine hood is extremely heavy and requires two-person lift. Ensure that there is adequate space in front of the vehicle to open hood completely without pinning or pinching personnel between hood and any other structure. Use extreme care when working under hood and make sure it is properly supported. Failure to comply may result in serious injury or death to personnel.

Engine components become extremely hot during normal operation. Allow engine to cool completely prior to performing maintenance. Use extreme care when working in close quarters in engine compartment. Stay clear of rotating parts. Wear safety goggles, work gloves, and long sleeves or shop coat. Failure to comply may result in serious injury or death to personnel.

Armor parts are heavy. Use care when removing or installing. Do not attempt to lift without an assistant. Failure to comply may result in serious injury or death to personnel.

Armor plate weighs approximately 50 lbs. Secure plate before removal of final bolt to prevent plate from falling. Failure to comply may result in damage to equipment and serious injury or death to personnel.

RIGHT ENGINE ARMOR PLATE REMOVAL AND INSTALLATION - (CONTINUED)

REMOVAL

1. Remove two bolts (Figure 1, Item 4) and locknuts (Figure 1, Item 3) from tire Fire Suppression System (FSS) bracket and position bracket aside. Discard locknuts.

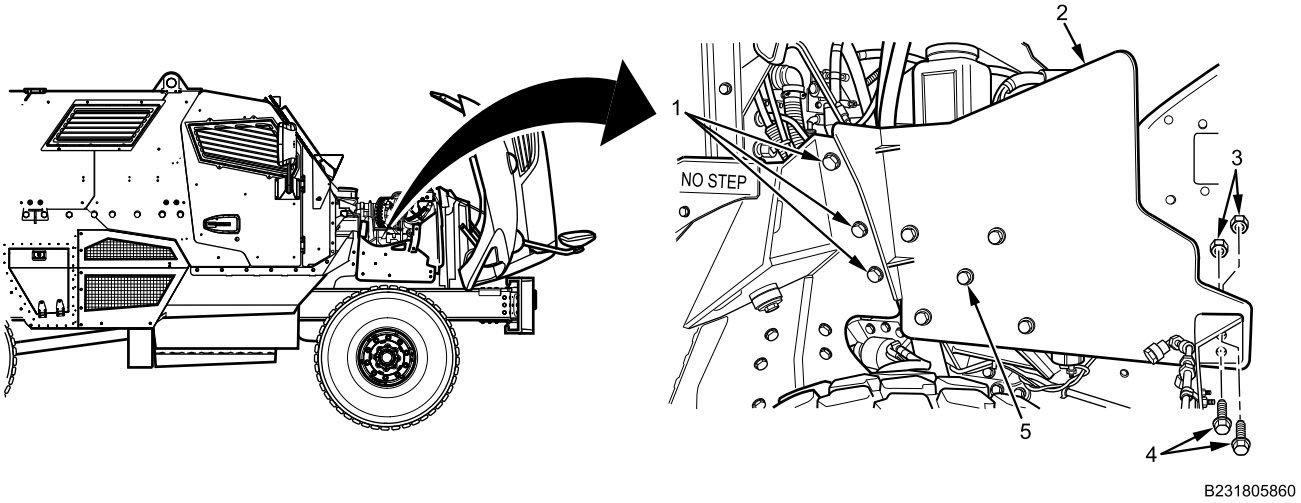

Figure 1. Right Side Engine Armor Plate.

2. Remove three bolts (Figure 1, Item 1) from wheel deflector armor plate.

NOTE

Some vehicles have flat washer spacers located between engine armor and engine armor bracket. Spacers are glued in place but occasionally fall off. Note location of spacers to aid installation.

3. With assistant, remove five bolts (Figure 1, Item 5) from armor plate (Figure 1, Item 2) and remove plate.

END OF TASK

INSTALLATION

WARNING

Corrosion preventive compound is toxic. Use only in well-ventilated area. Do not get in eyes; wear chemical safety goggles and full-face shield when using. Avoid contact with skin and wear rubber or plastic, solvent-resistant gloves. In case of contact, remove contaminated clothing and immediately wash area with soap and water. If compound contacts eyes, flush eyes with large amounts of water for at least 15 minutes and get immediate medical attention. If swallowed, do not induce vomiting; contact a physician immediately. Failure to comply may result in serious injury or death to personnel.

NOTE

If necessary, position flat washer spacers in locations noted during removal.

RIGHT ENGINE ARMOR PLATE REMOVAL AND INSTALLATION - (CONTINUED)

1. Apply corrosion preventive compound to bolts prior to installation.

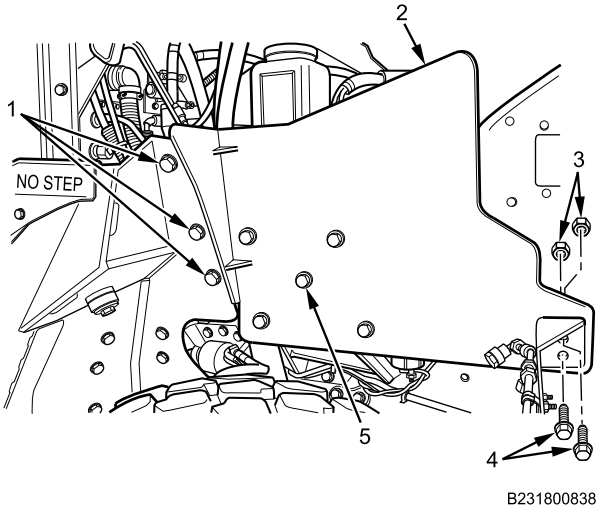

Figure 2. Right Side Engine Armor Plate (Mounting Bracket Hidden).

2. With assistant, install armor plate (Figure 2, Item 2) on mounting bracket with five bolts (Figure 2, Item 5). Do not tighten bolts.
3. Loosely install three bolts (Figure 2, Item 1) on wheel deflector armor plate.
4. Torque bolts (Figure 2, Item 1 and 5) to 275-300 lb-ft (373-407 N•m).
5. Install tire FSS bracket on armor plate (Figure 2, Item 2) with two bolts (Figure 2, Item 4) and new locknuts (Figure 2, Item 3). Tighten securely.

END OF TASK

FOLLOW-ON MAINTENANCE

1. Install windshield washer reservoir and bracket (WP 0686).
2. Close and secure engine hood. (TM 9-2355-106-10).
3. Remove wheel chocks (TM 9-2355-106-10).

END OF TASK

END OF WORK PACKAGE

FIELD MAINTENANCE

RIGHT ENGINE ARMOR PLATE BRACKET REMOVAL AND INSTALLATION

INITIAL SETUP:

Tools and Special Tools
General Mechanic's Tool Kit (GMTK) (WP 0795, Item 37)

Materials/Parts
Goggles, industrial (WP 0794, Item 20)
Face shield, industrial (WP 0794, Item 16)
Locknut - (4) (WP 0796, Item 154)
Locknut (WP 0796, Item 132)
Compound (WP 0794, Item 13)
Gloves (WP 0794, Item 18)

Personnel Required
Maintainer - (2)

References
TM 9-2355-106-10
TM 9-2355-106-23P
WP 0786
WP 0782

Equipment Condition
Parking brake set (TM 9-2355-106-10)
Transmission set in NEUTRAL (N) (TM 9-2355-106-10)
Engine off (TM 9-2355-106-10)
MAIN POWER switch off (TM 9-2355-106-10)
Wheels chocked (TM 9-2355-106-10)
Engine hood open and secured (TM 9-2355-106-10)
Right side engine armor plate removed (WP 0599)

WARNING

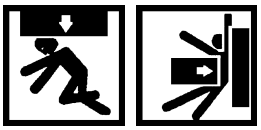

Engine hood is extremely heavy and requires two-person lift. Ensure that there is adequate space in front of the vehicle to open hood completely without pinning or pinching personnel between hood and any other structure. Use extreme care when working under hood and make sure it is properly supported. Failure to comply may result in serious injury or death to personnel.

REMOVAL

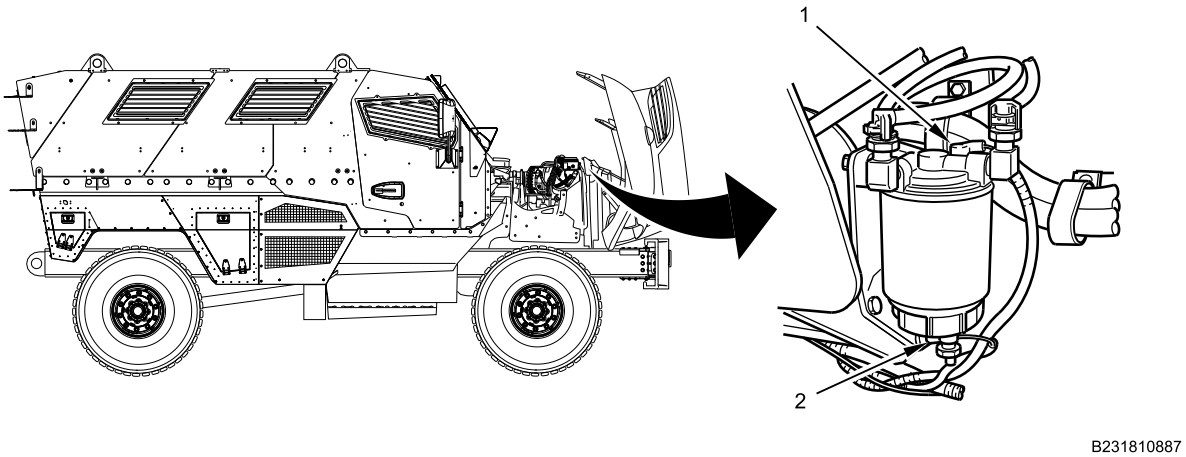

Figure 1. Fuel Water Separator Assembly Connections.

1. Disconnect water-in-fuel sensor connector (Figure 1, Item 2).
2. Disconnect Positive Temperature Coefficient (PTC) heater connector (Figure 1, Item 1).

RIGHT ENGINE ARMOR PLATE BRACKET REMOVAL AND INSTALLATION - (CONTINUED)

3. Remove fuel/water separator assembly mounting bolts (Figure 2, Item 3) and lockwashers (Figure 2, Item 2 and 3) from fuel/water separator assembly (Figure 2, Item 1). Discard lockwashers.

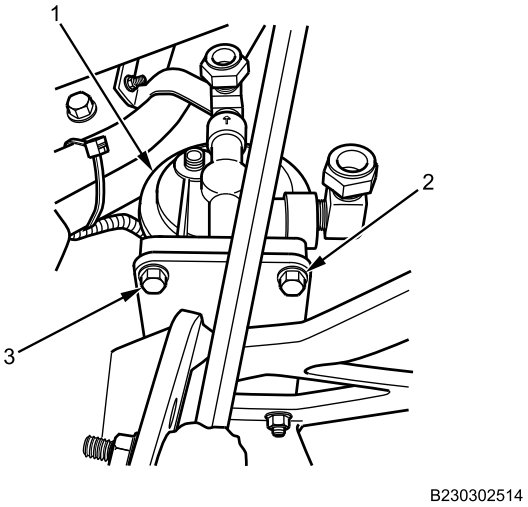

Figure 2. Fuel/Water Separator Assembly.

4. Note position of fuel/water separator (Figure 2, Item 1) and hoses and move aside.

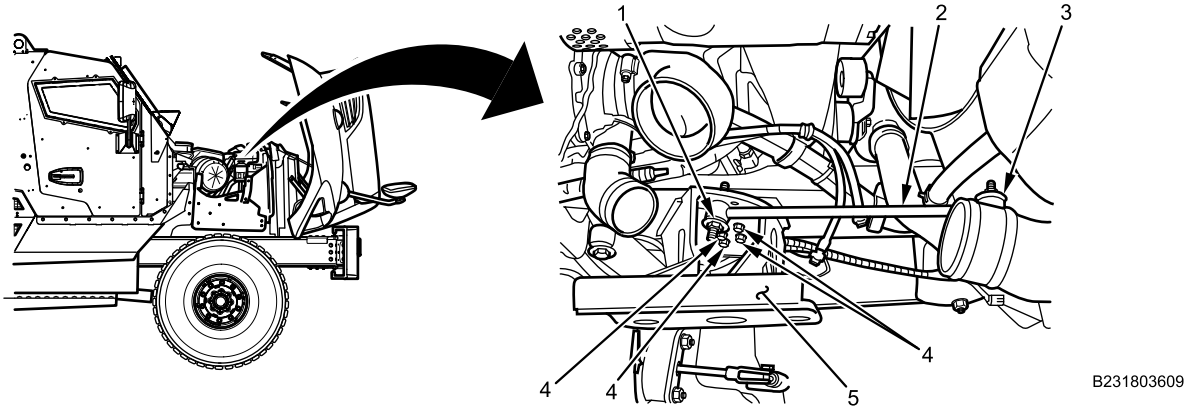

Figure 3. Right Side Engine Armor Plate Bracket.

5. Remove bolt, locknut, and washer (Figure 3, Item 1) from radiator support (Figure 3, Item 2) at engine armor plate bracket (Figure 3, Item 5). Discard locknut.
6. Remove bolt, locknut, and washer (Figure 3, Item 3) from radiator support at radiator assembly bracket and remove support (Figure 3, Item 2).
7. With assistant, support engine armor plate bracket (Figure 3, Item 5) on frame rail.
8. Remove four locknuts (Figure 3, Item 4) from engine armor bracket mounting bolts, and remove bracket (Figure 3, Item 5) from frame rail. Discard locknuts.

END OF TASK

RIGHT ENGINE ARMOR PLATE BRACKET REMOVAL AND INSTALLATION - (CONTINUED)

INSTALLATION

WARNING

Corrosion preventive compound is toxic. Use only in well-ventilated area. Do not get in eyes; wear chemical safety goggles and full-face shield when using. Avoid contact with skin and wear rubber or plastic, solvent-resistant gloves. In case of contact, remove contaminated clothing and immediately wash area with soap and water. If compound contacts eyes, flush eyes with large amounts of water for at least 15 minutes and get immediate medical attention. If swallowed, do not induce vomiting; contact a physician immediately. Failure to comply may result in serious injury or death to personnel.

1. Apply corrosion preventive compound on all radiator support and engine armor plate bracket mounting bolt threads.

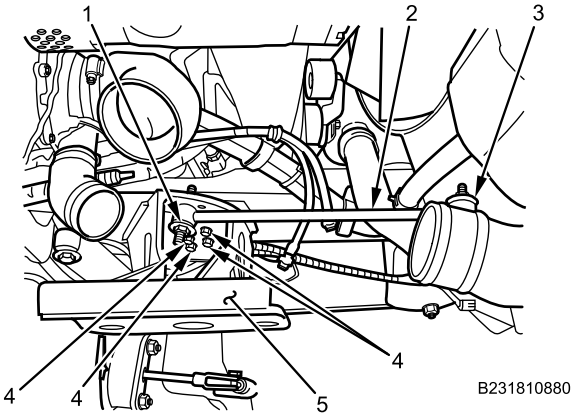

Figure 4. Right Side Engine Armor Plate Bracket.

2. With assistant, position engine armor plate bracket (Figure 4, Item 5) on frame rail.
3. Install engine armor plate bracket (Figure 4, Item 5) with four new locknuts (Figure 4, Item 4) on four bolts. Tighten securely.
4. Install radiator support (Figure 4, Item 2) on radiator assembly bracket with bolt, locknut, and washer (Figure 4, Item 3). Do not tighten.
5. Install radiator support (Figure 4, Item 2) on engine armor plate bracket (Figure 4, Item 5) with bolt, locknut, and washer (Figure 4, Item 1). Tighten all nuts and bolts securely.

RIGHT ENGINE ARMOR PLATE BRACKET REMOVAL AND INSTALLATION - (CONTINUED)

6. Apply corrosion preventive compound to fuel/water separator assembly mounting bolts (Figure 5, Item 3).

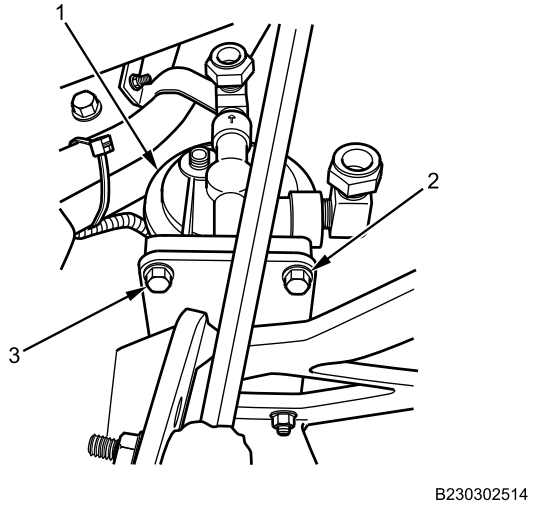

Figure 5. Fuel/Water Separator Assembly.

7. Install fuel/water separator assembly (Figure 5, Item 1) on mounting bracket with bolts (Figure 5, Item 3) and new lockwashers (Figure 5, Item 2). Tighten bolts securely.

WARNING

Dielectric grease is harmful to skin and eyes. If grease contacts eyes, rinse thoroughly and contact physician if irritation persists. If skin is contacted, wash thoroughly with soap and water. Failure to comply may result in serious injury to personnel.

8. Apply dielectric grease to connectors (Figure 6, Item 1 and 2).

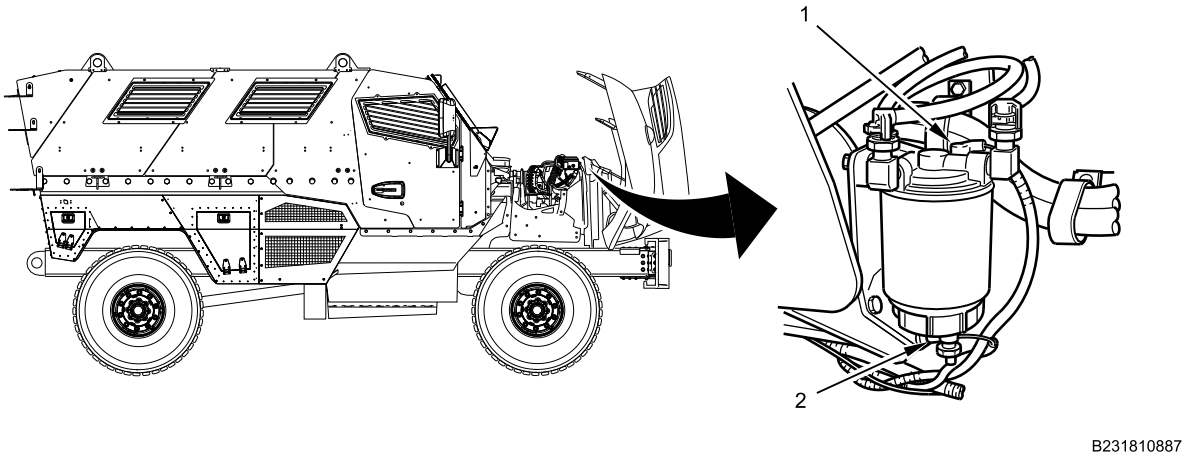

Figure 6. Fuel Water Separator Assembly Connections.

9. Connect PTC heater connector (Figure 6, Item 1) at top of filter head.

RIGHT ENGINE ARMOR PLATE BRACKET REMOVAL AND INSTALLATION - (CONTINUED)

10. Connect water-in-fuel sensor connector (Figure 6, Item 2) at bottom of sediment bowl.
11. Reposition fuel inlet and outlet hoses as noted in removal.

END OF TASK

FOLLOW-ON MAINTENANCE

1. Install right side engine armor plate (WP 0599).
2. Close engine hood (TM 9-2355-106-10).
3. Remove wheel chocks (TM 9-2355-106-10).

END OF TASK

END OF WORK PACKAGE

FIELD MAINTENANCE

INNER WHEEL DEFLECTOR ARMOR PLATE REMOVAL AND INSTALLATION

INITIAL SETUP:

Tools and Special Tools
General Mechanic's Tool Kit (GMTK) (WP 0795, Item 37)
Jack, transmission (WP 0795, Item 61)

Materials/Parts
Goggles, industrial (WP 0794, Item 20)
Faceshield, industrial (WP 0794, Item 16)
Gloves (WP 0794, Item 18)
Compound (WP 0794, Item 13)

Personnel Required
Maintainer - (2)

References
TM 9-2355-106-10
TM 9-2355-106-23P
WP 0786
WP 0782

Equipment Condition
Parking brake set (TM 9-2355-106-10)
Transmission set in NEUTRAL (N) (TM 9-2355-106-10)
Engine off (TM 9-2355-106-10)
MAIN POWER switch off (TM 9-2355-106-10)
Wheels chocked (TM 9-2355-106-10)

WARNING

Armor parts are heavy. Use care when removing or installing. Do not attempt to lift without an assistant and lifting device. Failure to comply may result in serious injury or death to personnel.

Armor plate weighs approximately 100-120 lbs. Secure plate before removal of final bolt to prevent plate from falling. Failure to comply may result in damage to equipment and serious injury or death to personnel.

NOTE

This procedure is similar for right side of vehicle. Left side procedure shown.

REMOVAL

NOTE

Belly armor has been removed in illustration to improve view of transmission jack supporting lower inner wheel deflector. Belly armor does not have to be removed in this procedure.

INNER WHEEL DEFLECTOR ARMOR PLATE REMOVAL AND INSTALLATION - (CONTINUED)

1. Support lower inner wheel deflector armor plate (Figure 1, Item 1) with transmission jack (Figure 1, Item 2).

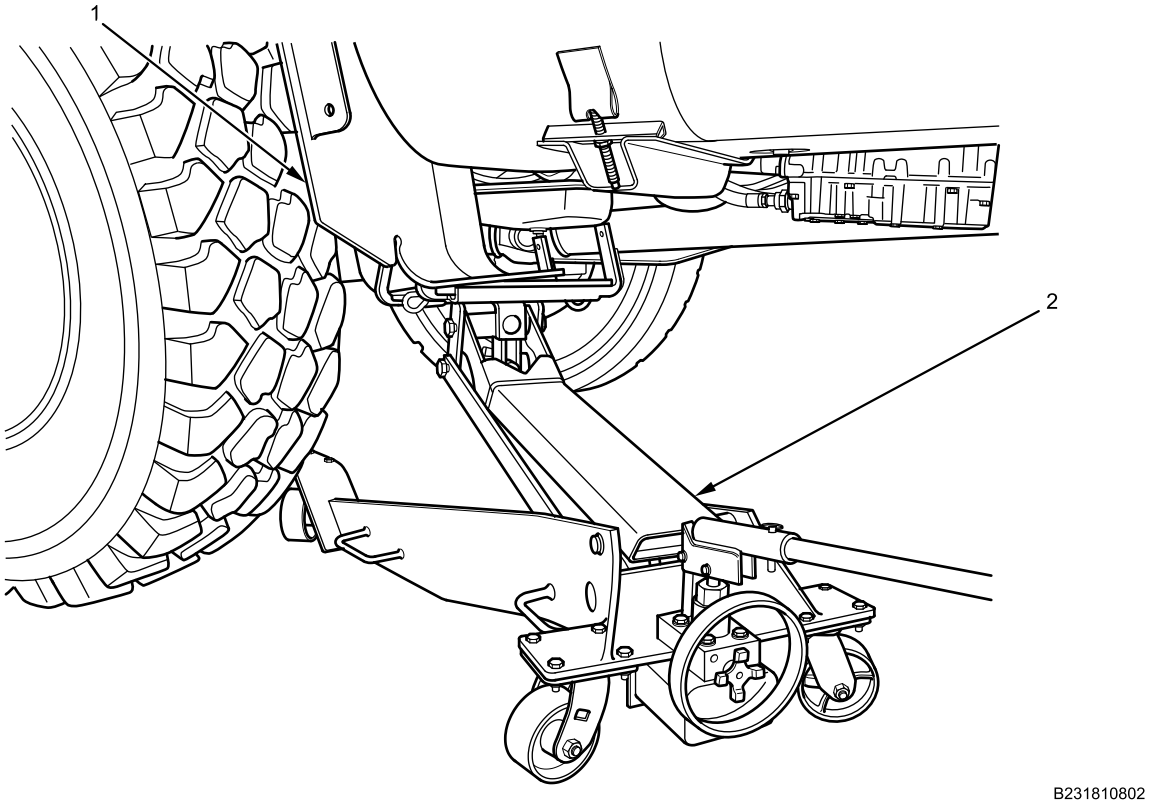

Figure 1. Lower Inner Wheel Deflector Armor Plate.

NOTE

Note location of rubber mounts on bolts to aid in installation. Right side of vehicle will have 17 mounting bolts.

2. With assistance, remove 16 bolts and washers (Figure 2, Item 1) from inner wheel deflector armor plate (Figure 2, Item 2). Remove armor plate.

INNER WHEEL DEFLECTOR ARMOR PLATE REMOVAL AND INSTALLATION - (CONTINUED)

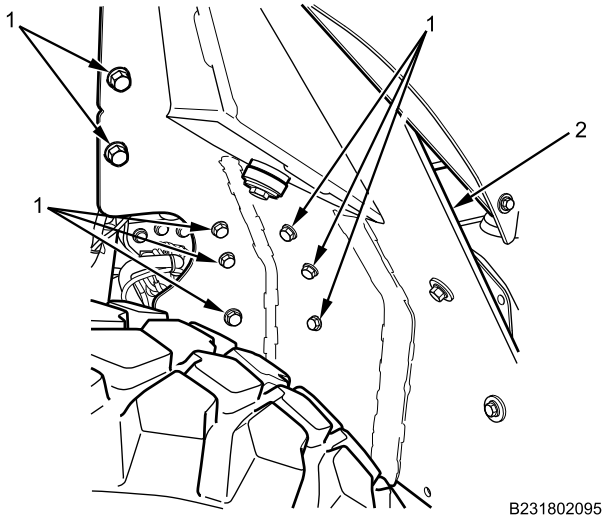

Figure 2. Inner Wheel Deflector Armor Plate.

END OF TASK

INNER WHEEL DEFLECTOR ARMOR PLATE REMOVAL AND INSTALLATION - (CONTINUED)

INSTALLATION

1. Install inner wheel deflector armor plate (Figure 3, Item 1) by supporting lower armor plate into position with transmission jack (Figure 3, Item 2).

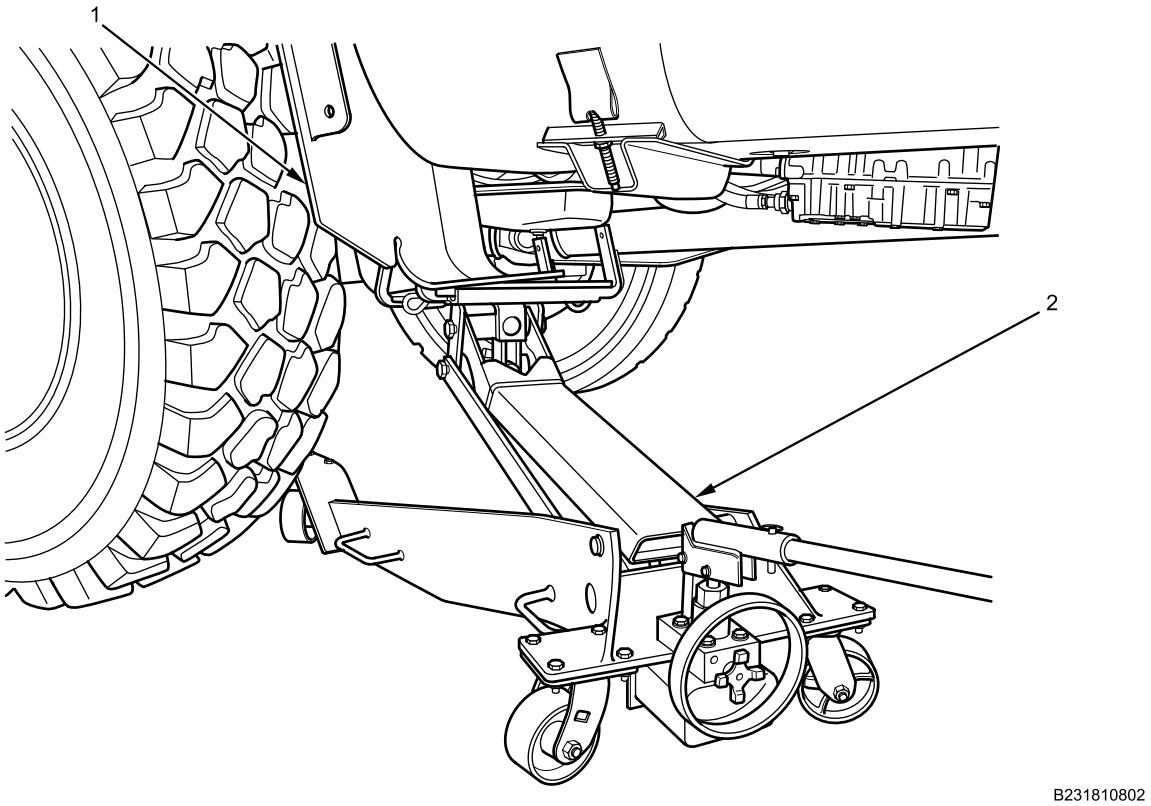

Figure 3. Lower Inner Wheel Deflector Armor Plate.

WARNING

Corrosion preventive compound is toxic. Use only in well-ventilated area. Use approved respirator with dual organic vapor/mist and particulate cartridge. Do not get in eyes; wear chemical safety goggles and full-face shield when using. Avoid contact with skin and wear rubber or plastic, solvent-resistant gloves. In case of contact, remove contaminated clothing and immediately wash area with soap and water. If compound contacts eyes, flush eyes with large amounts of water for at least 15 minutes and get immediate medical attention. If swallowed, do not induce vomiting; contact a physician immediately. Failure to comply may result in serious injury or death to personnel.

2. Apply corrosion preventive compound on all mounting bolts (Figure 4, Item 1).

INNER WHEEL DEFLECTOR ARMOR PLATE REMOVAL AND INSTALLATION - (CONTINUED)

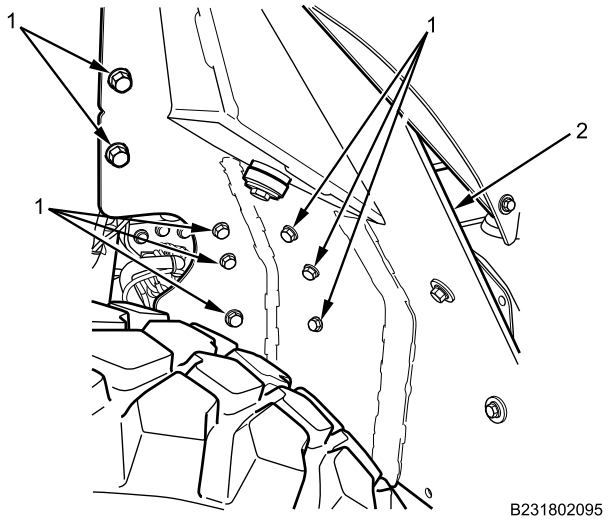

Figure 4. Inner Wheel Deflector Armor Plate.

NOTE

To aid in installation start all bolts loosely. Right side of vehicle will have 17 mounting bolts.

3. Secure inner wheel deflector armor plate (Figure 4, Item 2) with 16 bolts and washers (Figure 4, Item 1). Tighten bolts securely.

END OF TASK

FOLLOW-ON MAINTENANCE

1. Remove wheel chocks (TM 9-2355-106-10).

END OF TASK

END OF WORK PACKAGE

FIELD MAINTENANCE

LEFT INNER WHEEL DEFLECTOR BRACKET REMOVAL AND INSTALLATION

INITIAL SETUP:

Tools and Special Tools
General Mechanic's Tool Kit (GMTK) (WP 0795, Item 37)
Gloves, rubber (WP 0795, Item 38)

Materials/Parts
Goggles, industrial (WP 0794, Item 20)
Faceshield, industrial (WP 0794, Item 16)
Compound (WP 0794, Item 13)
Gloves (WP 0794, Item 18)
Gloves (WP 0794, Item 19)

Personnel Required
Maintainer - (2)

References
TM 9-2355-106-10
TM 2355-106-23P
WP 0786
WP 0782

Equipment Condition
Parking brake set (TM 9-2355-106-10)
Transmission set in NEUTRAL (N) (TM 9-2355-106-10)
Engine off (TM 9-2355-106-10)
MAIN POWER switch off (TM 9-2355-106-10)
Wheels chocked (TM 9-2355-106-10)
Engine hood open and secured (TM-9-2355-106-10)
Batteries disconnected (WP 0404)
Wheel deflector removed (WP 0601)
Fuel tank and brackets removed (WP 0265)

REMOVAL

1. Remove two bolts (Figure 1, Item 1), nuts (Figure 1, Item 2), and front frame bracket (Figure 1, Item 3) from wheel deflector bracket (Figure 1, Item 4).

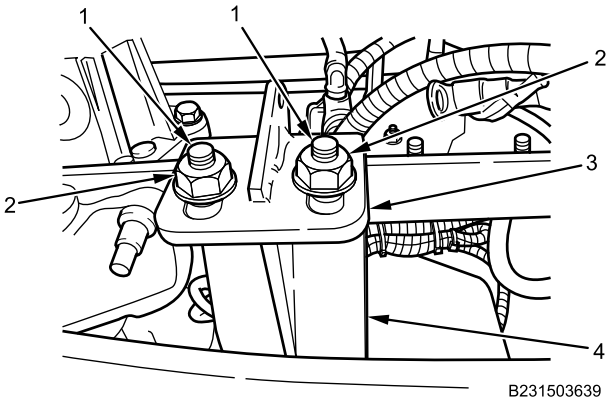

Figure 1. Front Frame Bracket.

LEFT INNER WHEEL DEFLECTOR BRACKET REMOVAL AND INSTALLATION - (CONTINUED)

2. Remove two bolts (Figure 2, Item 1), nuts (Figure 2, Item 2), and rear frame bracket (Figure 2, Item 3) from wheel deflector bracket (Figure 2, Item 4).

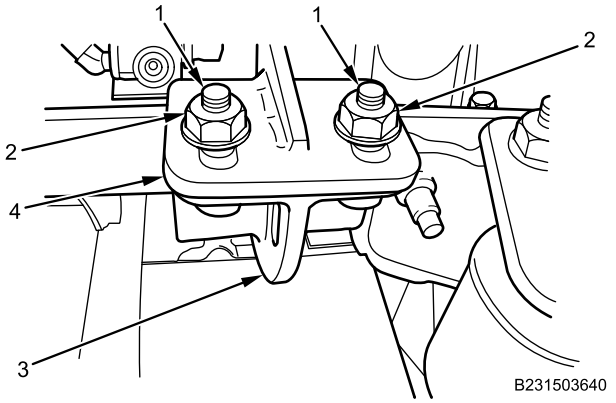

Figure 2. Rear Frame Bracket.

3. Remove two bolts (Figure 3, Item 1) and shield (Figure 3, Item 2) from left wheel deflector bracket (Figure 3, Item 3) and vehicle frame (Figure 3, Item 4).

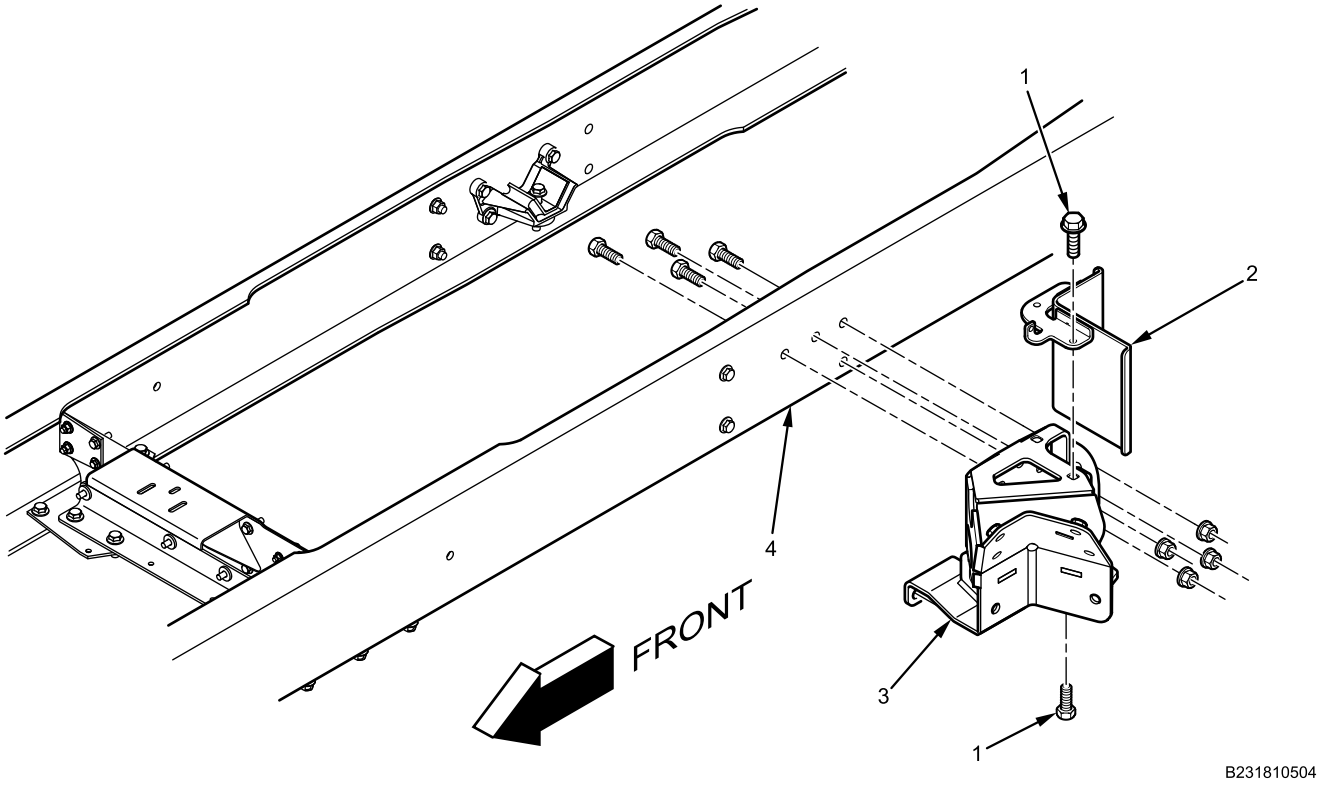

Figure 3. Left Inner Wheel Deflector Bracket Shield.

LEFT INNER WHEEL DEFLECTOR BRACKET REMOVAL AND INSTALLATION - (CONTINUED)

4. Release quick connect (Figure 4, Item 2) and remove air line (Figure 4, Item 1) from air line coupler (Figure 4, Item 3). Position air line aside.

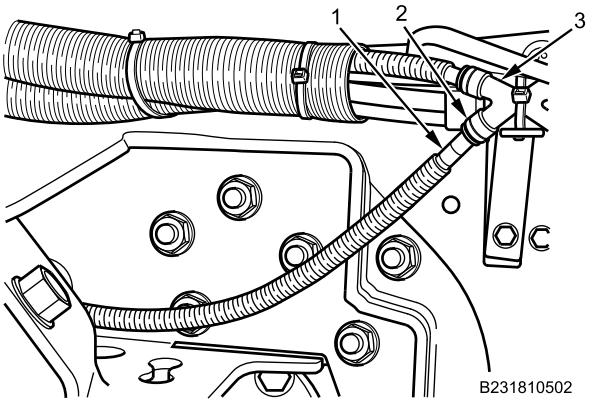

Figure 4. Air Line

WARNING

Armor parts are heavy. Use care when removing or installing. Do not attempt to lift without an assistant. Wear gloves. Failure to comply may result in serious injury or death to personnel.

NOTE

Note location of bolts on wheel deflector bracket to aid in installation.

5. With assistant, remove six remaining bolts, nuts (Figure 5, Item 1), and left wheel deflector bracket (Figure 5, Item 2) from frame (Figure 5, Item 3).

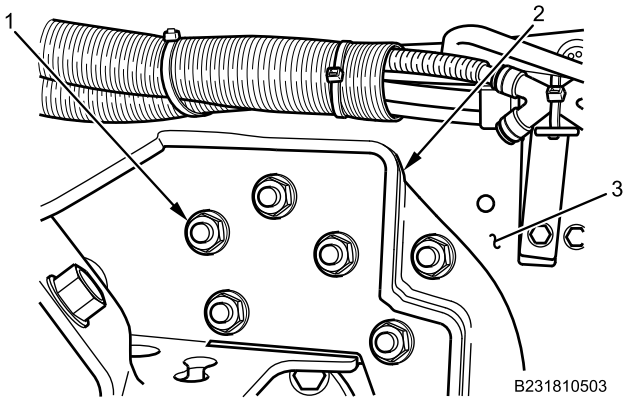

Figure 5. Left Inner Wheel Deflector.

END OF TASK

LEFT INNER WHEEL DEFLECTOR BRACKET REMOVAL AND INSTALLATION - (CONTINUED)

INSTALLATION

WARNING

Armor parts are heavy. Use care when removing or installing. Do not attempt to lift without an assistant. Wear gloves. Failure to comply may result in serious injury or death to personnel.

Corrosion preventive compound is toxic. Use only in well-ventilated area. Do not get in eyes; wear chemical safety goggles and full-face shield when using. Avoid contact with skin and wear rubber or plastic, solvent-resistant gloves. In case of contact, remove contaminated clothing and immediately wash area with soap and water. If compound contacts eyes, flush eyes with large amounts of water for at least 15 minutes and get immediate medical attention. If swallowed, do not induce vomiting; contact a physician immediately. Failure to comply may result in serious injury or death to personnel.

1. Apply corrosion compound to threads on all bolts.

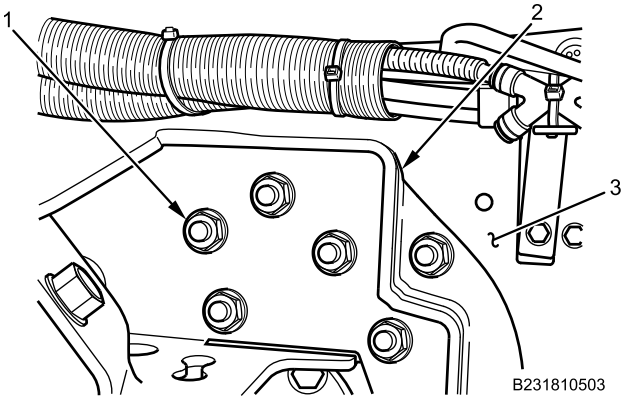

Figure 6. Left Inner Wheel Deflector Bracket.

2. With assistant, install left wheel deflector bracket (Figure 6, Item 2) on vehicle frame (Figure 6, Item 3) with six bolts and nuts (Figure 6, Item 1), as noted in removal. Tighten bolts securely.

LEFT INNER WHEEL DEFLECTOR BRACKET REMOVAL AND INSTALLATION - (CONTINUED)

3. Install air line (Figure 7, Item 1) into quick connect (Figure 7, Item 2) on air line coupler (Figure 7, Item 3). Ensure air line is secure in quick connect.

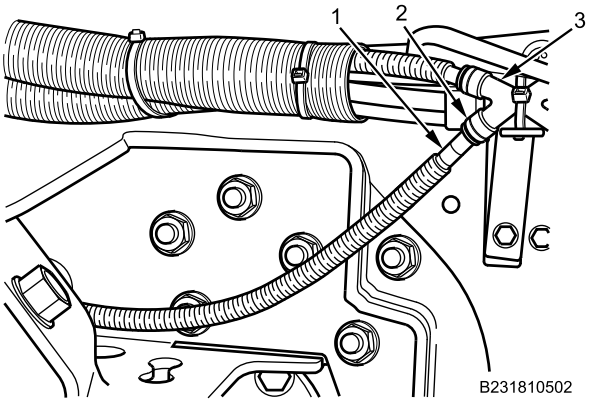

Figure 7. Air Line.

4. Install shield (Figure 8, Item 2) on left wheel deflector bracket (Figure 8, Item 3) and vehicle frame (Figure 8, Item 4) with two bolts (Figure 8, Item 1). Tighten bolts securely.

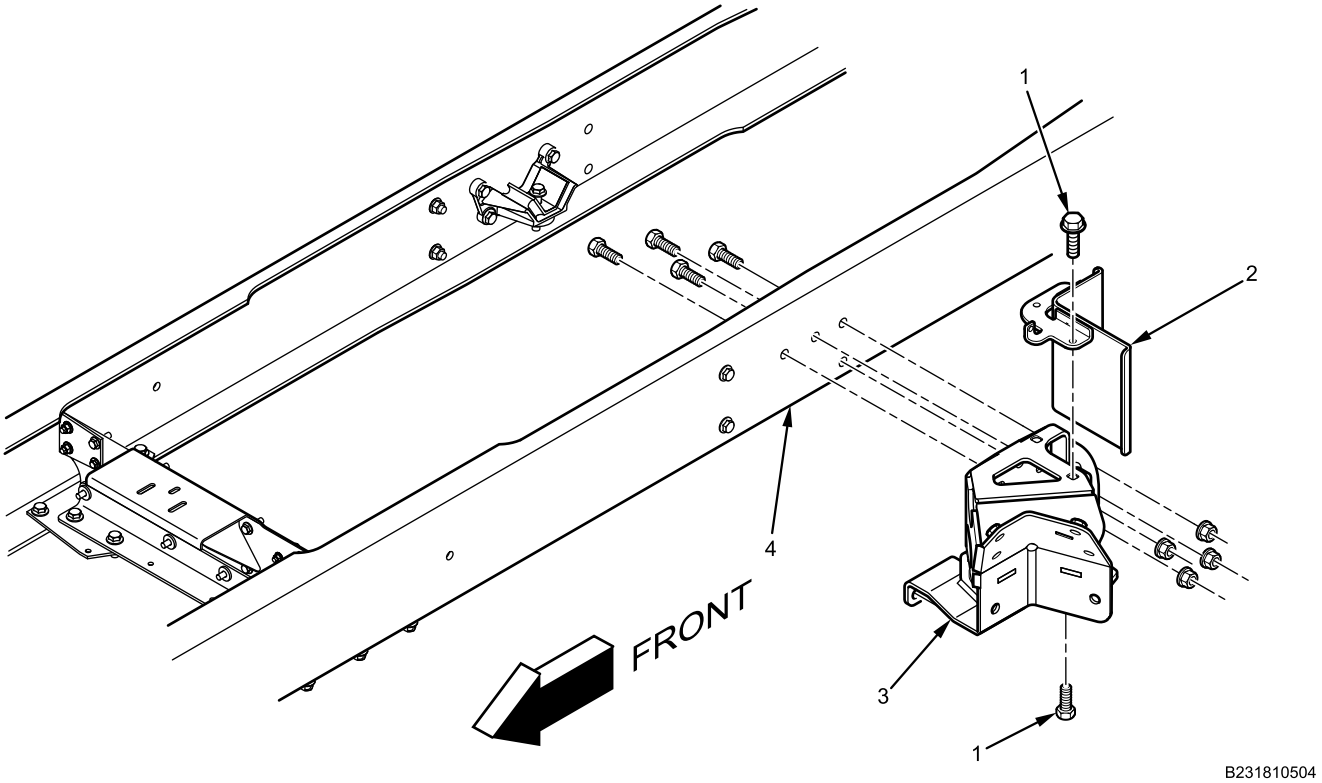

Figure 8. Left Inner Wheel Deflector Bracket Shield.

LEFT INNER WHEEL DEFLECTOR BRACKET REMOVAL AND INSTALLATION - (CONTINUED)

5. Install rear frame bracket (Figure 9, Item 3) on wheel deflector bracket (Figure 9, Item 4) with two bolts (Figure 9, Item 1) and nuts (Figure 9, Item 2). Tighten bolts securely.

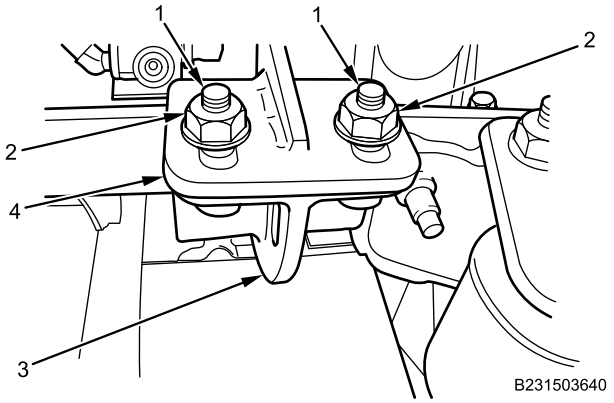

Figure 9. Rear Frame Bracket.

6. Install front frame bracket (Figure 10, Item 3) on wheel deflector bracket (Figure 10, Item 4) with two bolts (Figure 10, Item 1) and nuts (Figure 10, Item 2). Tighten bolts securely.

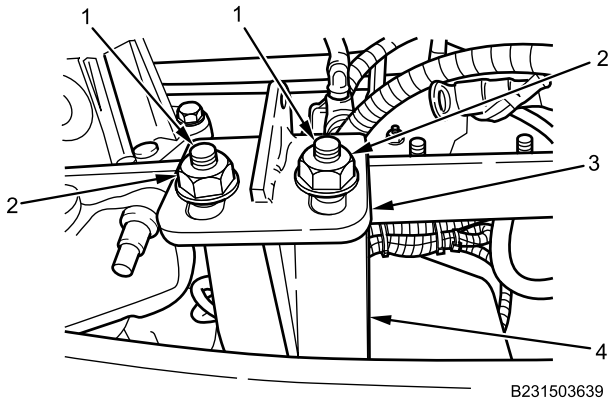

Figure 10. Front Frame Bracket.

END OF TASK

FOLLOW-ON MAINTENANCE

1. Install fuel tank and brackets (WP 0265).
2. Install wheel deflector (WP 0601).
3. Connect batteries (WP 0404).
4. Turn MAIN POWER switch on (TM 9-2355-106-10).
5. Start engine and verify proper operation (TM 9-2355-106-10).
6. Turn engine off (TM 9-2355-106-10).
7. Turn MAIN POWER switch off (TM 9-2355-106-10).
8. Close engine hood and secure (TM 9-2355-106-10).
9. Remove wheel chocks (TM 9-2355-106-10).

END OF TASK

END OF WORK PACKAGE

FIELD MAINTENANCE

RIGHT INNER WHEEL DEFLECTOR BRACKET REMOVAL AND INSTALLATION

INITIAL SETUP:

Tools and Special Tools
General Mechanic's Tool Kit (GMTK) (WP 0795, Item 37)

Materials/Parts
Goggles, industrial (WP 0794, Item 20)
Faceshield, industrial (WP 0794, Item 16)
Compound (WP 0794, Item 13)
Cable lock strap (WP 0796, Item 134)
Cable lock strap (WP 0796, Item 144)
Gloves (WP 0794, Item 18)
Gloves (WP 0794, Item 19)

Personnel Required
Maintainer - (2)

References
TM 9-2355-106-10
TM 2355-106-23P
WP 0786
WP 0782

Equipment Condition
Parking brake set (TM 9-2355-106-10)
Transmission set in NEUTRAL (N) (TM 9-2355-106-10)
Engine off (TM 9-2355-106-10)
MAIN POWER switch off (TM 9-2355-106-10)
Wheels chocked (TM 9-2355-106-10)
Engine hood open and secured (TM 9-2355-106-10)
Batteries disconnected (WP 0404)
Wheel deflector removed (WP 0601)
Air tanks removed (WP 0499)
Battery box removed (WP 0604)

REMOVAL

WARNING

Engine hood is extremely heavy and requires two-person lift. Ensure that there is adequate space in front of the vehicle to open hood completely without pinning or pinching personnel between hood and any other structure. Use extreme care when working under hood and make sure it is properly supported. Failure to comply may result in serious injury or death to personnel.

Armor parts are heavy. Use care when removing or installing. Do not attempt to lift without an assistant and lifting device. Wear gloves. Failure to comply may result in serious injury or death to personnel.

RIGHT INNER WHEEL DEFLECTOR BRACKET REMOVAL AND INSTALLATION - (CONTINUED)

1. Remove bolt (Figure 1, Item 3) and five ground wires (Figure 1, Item 2) from wheel deflector bracket. (Figure 1, Item 4). Set wires aside.

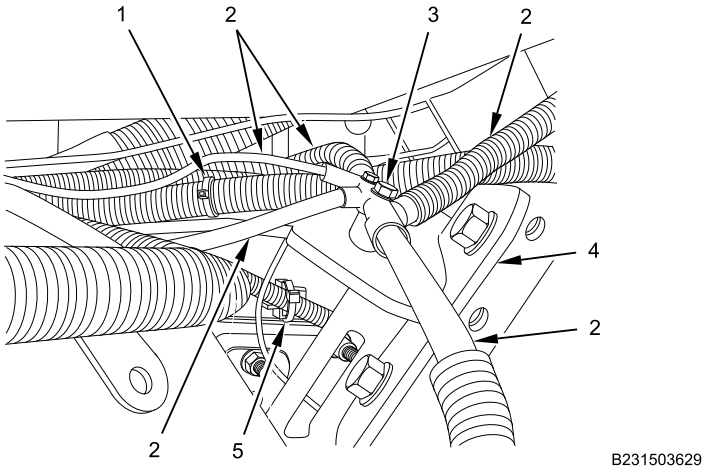

Figure 1. Wheel Deflector Ground Wires and Harness.

2. Remove cable lock strap (Figure 1, Item 1) and mount from wheel deflector bracket (Figure 1, Item 4). Discard cable lock strap
3. Remove cable lock strap (Figure 1, Item 5) and mount from wheel deflector mounting bolt. Discard cable lock strap
4. Remove bolt (Figure 2, Item 2), nut (Figure 2, Item 3), and wiring harness bracket (Figure 2, Item 1) from front frame bracket (Figure 2, Item 4). Position bracket with harness aside.

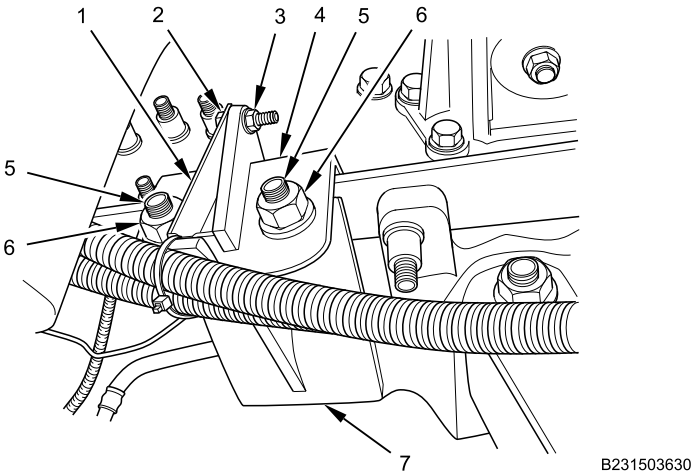

Figure 2. Front Frame Bracket.

5. Remove two bolts (Figure 2, Item 5), nuts (Figure 2, Item 6), and front frame bracket (Figure 2, Item 4) from wheel deflector bracket (Figure 2, Item 7).

RIGHT INNER WHEEL DEFLECTOR BRACKET REMOVAL AND INSTALLATION - (CONTINUED)

6. Remove bolt (Figure 3, Item 3) and nut (Figure 3, Item 4) from wiring harness bracket (Figure 3, Item 2) on rear frame bracket (Figure 3, Item 1). Position bracket and harness aside.

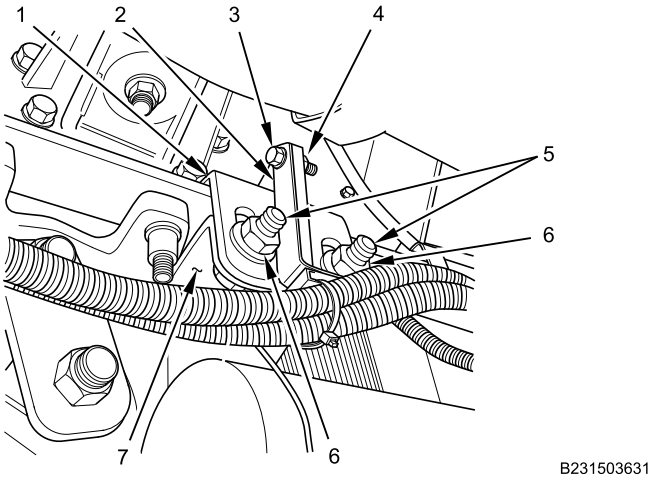

Figure 3. Rear Frame Bracket.

7. Remove two bolts (Figure 3, Item 5), nuts (Figure 3, Item 6), and rear frame bracket (Figure 3, Item 1) from wheel deflector bracket (Figure 3, Item 7).

NOTE

Note location of bolts on wheel deflector bracket to aid in installation. Four bolts and nuts are hidden from view.

8. With assistant, remove six bolts (Figure 4, Item 3), nuts (Figure 4, Item 1), and wheel deflector bracket (Figure 4, Item 2) from frame (Figure 4, Item 4).

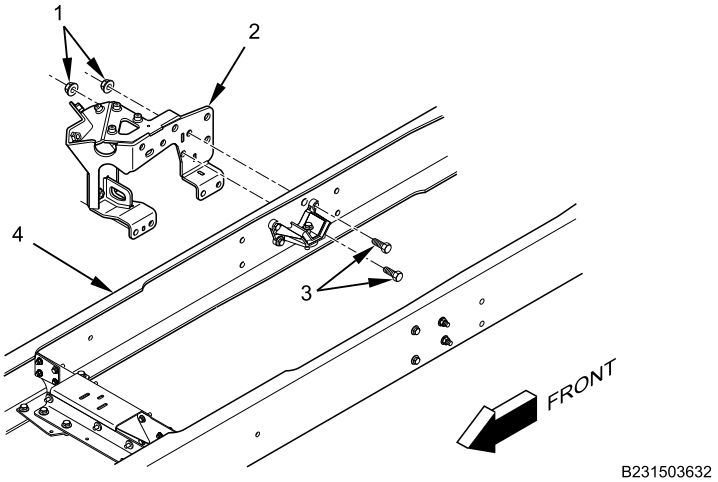

Figure 4. Wheel Deflector.

END OF TASK

RIGHT INNER WHEEL DEFLECTOR BRACKET REMOVAL AND INSTALLATION - (CONTINUED)

INSTALLATION

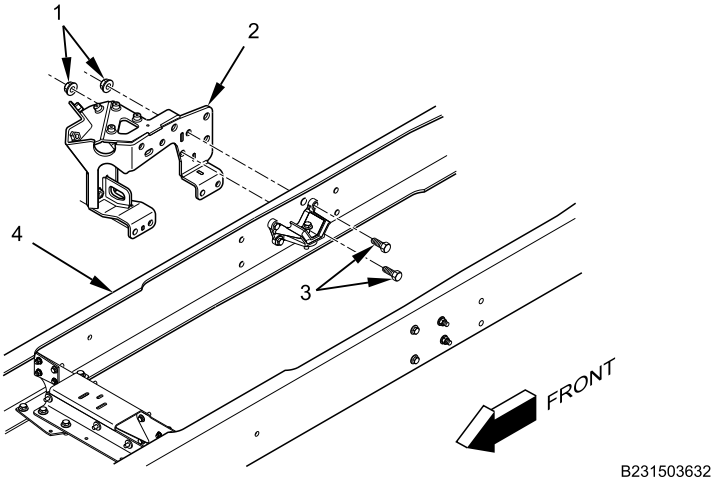

Figure 5. Wheel Deflector.

WARNING

Corrosion preventive compound is toxic. Use only in well-ventilated area. Do not get in eyes; wear chemical safety goggles and full-face shield when using. Avoid contact with skin and wear rubber or plastic, solvent-resistant gloves. In case of contact, remove contaminated clothing and immediately wash area with soap and water. If compound contacts eyes, flush eyes with large amounts of water for at least 15 minutes and get immediate medical attention. If swallowed, do not induce vomiting; contact a physician immediately. Failure to comply may result in serious injury or death to personnel.

NOTE

Four bolts and nuts are hidden from view.

1. Apply corrosion compound to threads on all bolts.
2. With assistant, install wheel deflector bracket (Figure 5, Item 2) on frame (Figure 5, Item 4) with six bolts (Figure 5, Item 3) and nuts (Figure 5, Item 1) as noted in removal. Tighten bolts securely.
3. Install rear frame bracket (Figure 6, Item 1) on wheel deflector bracket (Figure 6, Item 7) with two bolts (Figure 6, Item 5) and nuts (Figure 6, Item 6). Tighten bolts securely.

RIGHT INNER WHEEL DEFLECTOR BRACKET REMOVAL AND INSTALLATION - (CONTINUED)

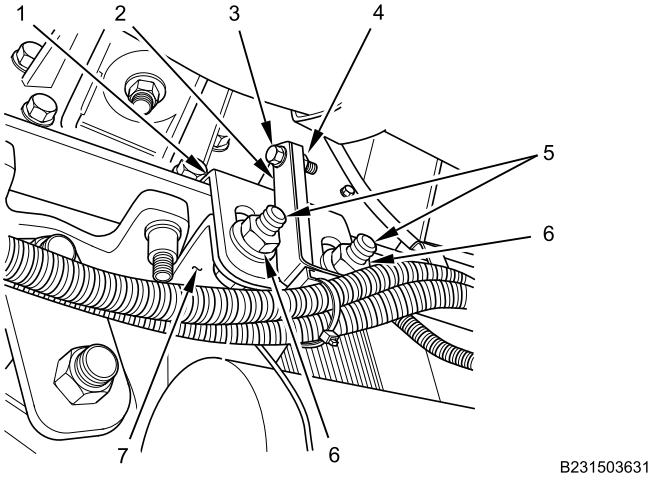

Figure 6. Rear Frame Bracket.

4. Install wiring harness bracket (Figure 6, Item 2) on rear frame bracket (Figure 6, Item 1) with bolt (Figure 6, Item 3) and nut (Figure 6, Item 4). Tighten bolt securely.
5. Install front frame bracket (Figure 7, Item 4) on wheel deflector bracket (Figure 7, Item 7) with two bolts (Figure 7, Item 5) and nuts (Figure 7, Item 6). Tighten bolts securely.

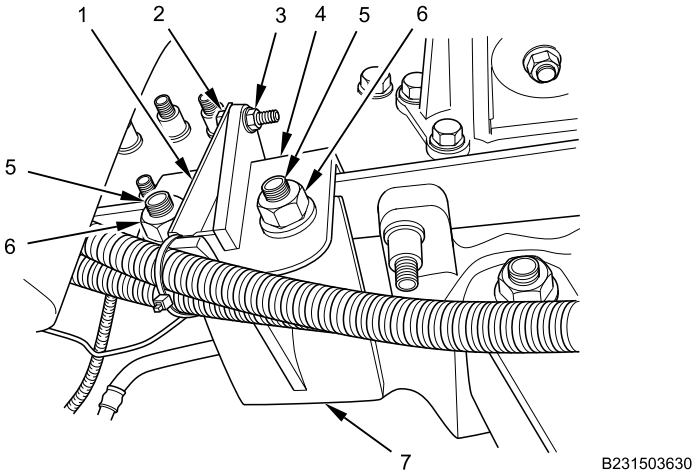

Figure 7. Front Frame Bracket.

6. Install wiring harness bracket (Figure 7, Item 1) on front frame bracket (Figure 7, Item 4) with bolt (Figure 7, Item 2) and nut (Figure 7, Item 3). Tighten bolt securely.

RIGHT INNER WHEEL DEFLECTOR BRACKET REMOVAL AND INSTALLATION - (CONTINUED)

7. Install new cable lock strap (Figure 8, Item 1) and mount on wheel deflector mounting bolt, as noted in removal.

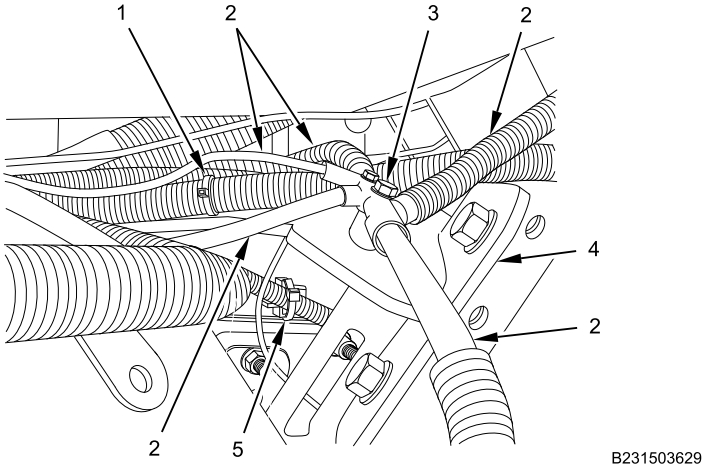

Figure 8. Wheel Deflector Ground Wires and Harness.

8. Install new cable lock strap and mount (Figure 8, Item 5) on wheel deflector bracket (Figure 8, Item 4), as noted in removal.
9. Install five ground wires (Figure 8, Item 2) on wheel deflector bracket (Figure 8, Item 4) with bolt (Figure 8, Item 3). Tighten bolt securely.

END OF TASK

FOLLOW-ON MAINTENANCE

1. Install wheel deflector (WP 0601).
2. Install battery box (WP 0604).
3. Install air tanks (WP 0499).
4. Connect batteries (WP 0404).
5. Turn MAIN POWER switch on (TM 9-2355-106-10).
6. Start engine and verify proper operation (TM 9-2355-106-10).
7. Turn engine off (TM 9-2355-106-10).
8. Turn MAIN POWER switch off (TM 9-2355-106-10).
9. Close engine hood (TM 9-2355-106-10).
10. Remove wheel chocks (TM 9-2355-106-10).

END OF TASK

END OF WORK PACKAGE

FIELD MAINTENANCE

EXTERIOR BATTERY BOX ARMOR DOOR REMOVAL AND INSTALLATION

INITIAL SETUP:

Tools and Special Tools
General Mechanic's Tool Kit (GMTK) (WP 0795, Item 37)

Materials/Parts
Locknut - (4) (WP 0796, Item 147)

Personnel Required
Maintainer - (2)

References
TM 9-2355-106-10
TM 9-2355-106-23P
WP 0786
WP 0782

Equipment Condition
Parking brake set (TM 9-2355-106-10)
Transmission set in NEUTRAL (N) (TM 9-2355-106-10)
Engine off (TM 9-2355-106-10)
MAIN POWER switch off (TM 9-2355-106-10)
Wheels chocked (TM 9-2355-106-10)

WARNING

Armor parts are heavy. Use care when removing or installing. Do not attempt to lift without an assistant. Failure to comply may result in serious injury or death to personnel.

EXTERIOR BATTERY BOX ARMOR DOOR REMOVAL AND INSTALLATION - (CONTINUED)

REMOVAL

1. Remove rear cab body bolt (Figure 1, Item 1) from cab.

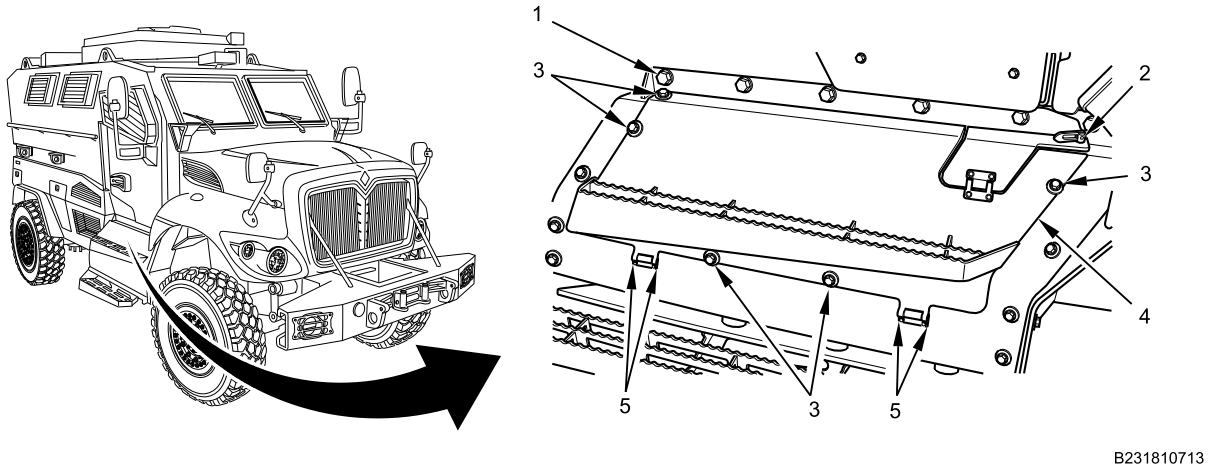

Figure 1. Battery Door.

2. Remove five bolts and flat washers (Figure 1, Item 3) from battery door.
3. Flip access door lever (Figure 1, Item 2) to up position.

WARNING

Secure armor door before removal of final bolt to prevent door from falling. Failure to comply may result in damage to equipment and serious injury or death to personnel.

4. With assistant, remove four hinge bolts (Figure 1, Item 5) from battery box armor door (Figure 1, Item 4), and remove battery box armor door.
5. Remove four bolts and locknuts (Figure 2, Item 2) from access door hinge (Figure 2, Item 3) on battery box door (Figure 2, Item 4). Discard locknuts. Remove hinge and access door (Figure 2, Item 1).

EXTERIOR BATTERY BOX ARMOR DOOR REMOVAL AND INSTALLATION - (CONTINUED)

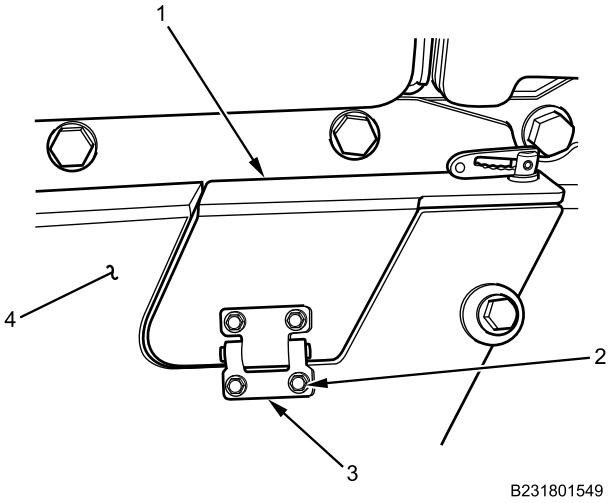

Figure 2. Battery Box Access Door.

END OF TASK

INSTALLATION

1. Install hinge (Figure 3, Item 3) on access door (Figure 3, Item 1) with two bolts and new locknuts (Figure 3, Item 2). Tighten locknuts securely.

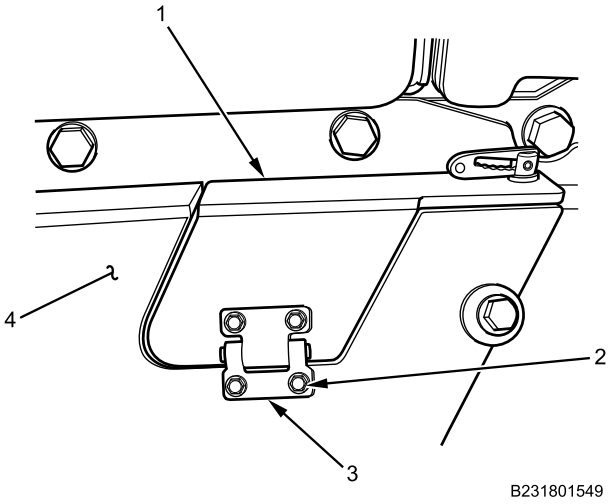

Figure 3. Battery Box Access Door.

2. With assistant, install access door (Figure 3, Item 1) and hinge (Figure 3, Item 3) on battery box armor door (Figure 3, Item 4) with two bolts and new locknuts (Figure 3, Item 2). Tighten locknuts securely.

EXTERIOR BATTERY BOX ARMOR DOOR REMOVAL AND INSTALLATION - (CONTINUED)

3. With assistant, install battery box armor door (Figure 4, Item 4) with four hinge bolts (Figure 4, Item 5). Tighten securely.

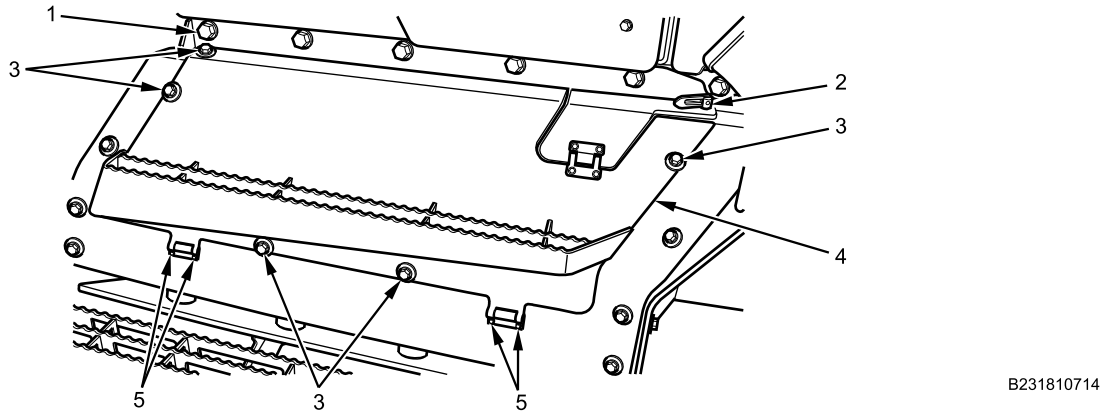

Figure 4. Exterior Battery Box Armor Door.

4. Secure battery box door (Figure 4, Item 4) with five bolts (Figure 4, Item 3) and washers. Tighten securely.
5. Move access door lever (Figure 4, Item 2) to down position.
6. Install rear cab body bolt (Figure 4, Item 1).

END OF TASK

FOLLOW-ON MAINTENANCE

1. Remove wheel chocks (TM 9-2355-106-10).

END OF TASK

END OF WORK PACKAGE

FIELD MAINTENANCE

EXTERIOR FUEL TANK ARMOR DOOR REMOVAL AND INSTALLATION

INITIAL SETUP:

Tools and Special Tools
General Mechanic's Tool Kit (GMTK) (WP 0795, Item 37)

Materials/Parts
Hex locknuts - (4) (WP 0796, Item 147)
Gloves (WP 0794, Item 19)

Personnel Required
Maintainer - (2)

References
TM 9-2355-106-10
TM 9-2355-106-23P
WP 0786
WP 0782

Equipment Condition
Parking brake set (TM 9-2355-106-10)
Transmission set in NEUTRAL (N) (TM 9-2355-106-10)
Engine off (TM 9-2355-106-10)
MAIN POWER switch off (TM 9-2355-106-10)
Wheels chocked (TM 9-2355-106-10)

WARNING

Armor parts are heavy. Use care when removing or installing. Do not attempt to lift without assistance. Wear gloves. Failure to comply may result in serious injury or death to personnel.

REMOVAL

1. Move fuel cap spring (Figure 1, Item 1) into open position.

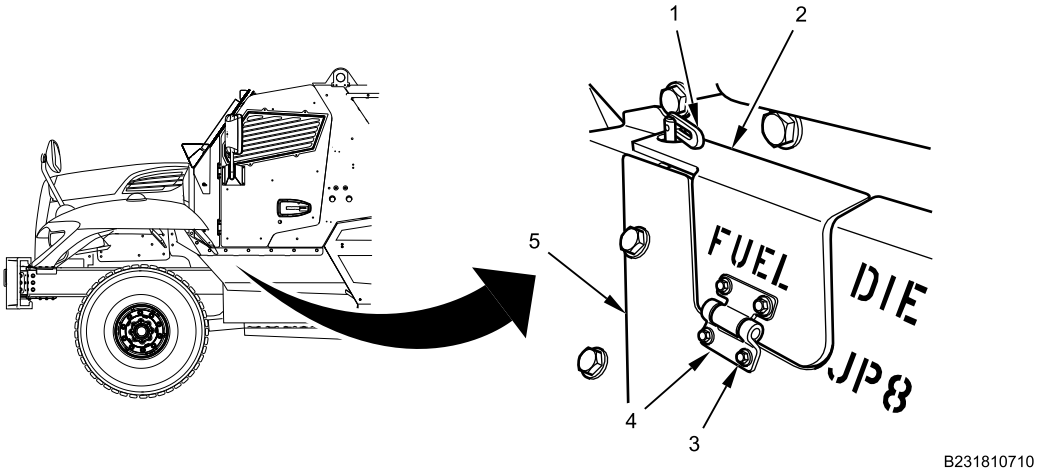

Figure 1. Fuel Tank Access Door.

2. Remove four bolts and locknuts (Figure 1, Item 3) from hinge (Figure 1, Item 4) on fuel tank armor door (Figure 1, Item 5). Discard locknuts. Remove hinge (Figure 1, Item 4) and fuel access door (Figure 1, Item 2).

EXTERIOR FUEL TANK ARMOR DOOR REMOVAL AND INSTALLATION - (CONTINUED)

3. Remove rear cab body bolt (Figure 2, Item 2) from cab.

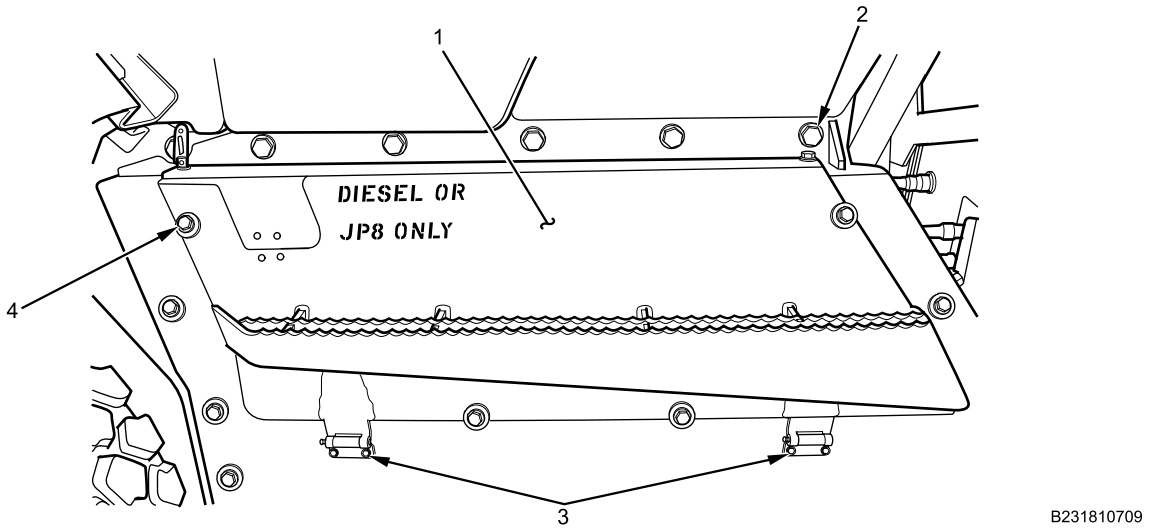

Figure 2. Exterior Fuel Tank Armor Door.

WARNING

Secure armor door before removal of final bolt to prevent door from falling. Failure to comply may result in damage to equipment and serious injury or death to personnel.

4. Remove five bolts and washers (Figure 2, Item 4) from exterior fuel tank armor door (Figure 2, Item 1).
5. With assistant, remove four hinge bolts (Figure 2, Item 3) from fuel tank armor door hinges, and remove exterior fuel tank armor door (Figure 2, Item 1).

END OF TASK

EXTERIOR FUEL TANK ARMOR DOOR REMOVAL AND INSTALLATION - (CONTINUED)

INSTALLATION

1. With assistant, install fuel tank armor door (Figure 3, Item 1) with four hinge bolts (Figure 3, Item 3).

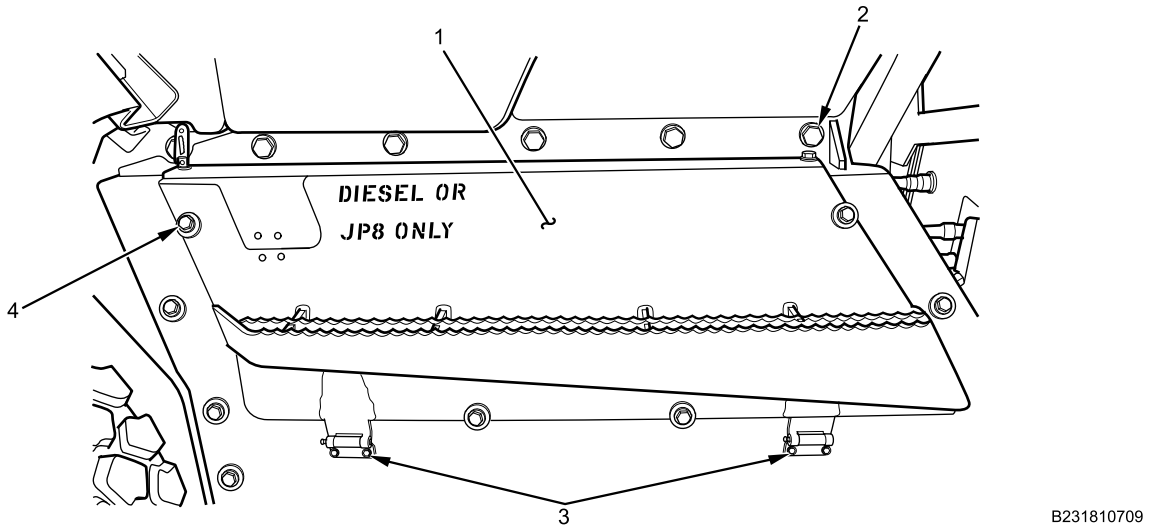

Figure 3. Exterior Fuel Tank Armor Door.

2. Secure fuel tank armor door (Figure 3, Item 1) with five bolts and washers (Figure 3, Item 4). Tighten all bolts securely.
3. Install rear cab body bolt (Figure 3, Item 2) on cab. Tighten securely.
4. Install hinge (Figure 4, Item 4) on fuel access door (Figure 4, Item 2) with two bolts and two new locknuts (Figure 4, Item 3). Tighten locknuts securely.

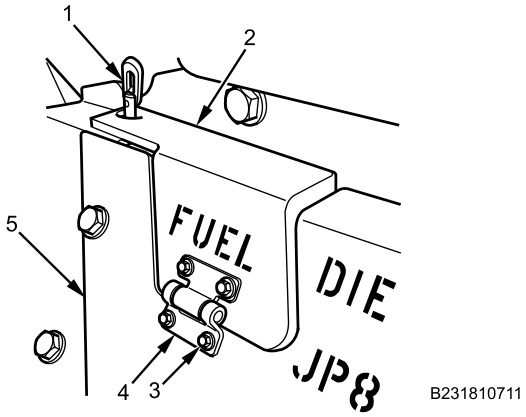

Figure 4. Fuel Tank Access Door.

5. Install fuel access door (Figure 4, Item 2) and hinge (Figure 4, Item 4) on fuel tank armor door (Figure 4, Item 5) with two bolts and two new locknuts (Figure 4, Item 3). Tighten locknuts securely.
6. Move fuel cap spring (Figure 4, Item 1) into closed position.

END OF TASK

EXTERIOR FUEL TANK ARMOR DOOR REMOVAL AND INSTALLATION - (CONTINUED)

FOLLOW-ON MAINTENANCE

1. Remove wheel chocks (TM 9-2355-106-10).

END OF TASK

END OF WORK PACKAGE

FIELD MAINTENANCE

BELLY ARMOR REMOVAL AND INSTALLATION

INITIAL SETUP:

Tools and Special Tools
General Mechanic's Tool Kit (GMTK) (WP 0795, Item 37)
Belly Armor Removal/Installer Kit (WP 0795, Item 16)
Wrench, torque, 50-250 lb-ft, 1/2-inch drive (WP 0795, Item 143)
Bar, breaker, 3/4-inch drive, chrome (WP 0795, Item 13)
Adapter, 3/4-inch female - 1/2-inch male (WP 0795, Item 4)
Wrench, combination, standard length, 12 pt, 1-1/8 inch, chrome (WP 0795, Item 137)
Socket, socket wrench, 1/2-inch drive, 6 pt, regular, 1-5/16 inch (WP 0795, Item 95)
Wrench, torque, click, ratcheting, 3/8-inch drive, 15-75 lb-ft (WP 0795, Item 145)

Materials/Parts
Goggles, industrial (WP 0794, Item 20)
Faceshield, industrial (WP 0794, Item 16)
Gloves (WP 0794, Item 18)
Compound (WP 0794, Item 13)

Personnel Required
Maintainer - (2)

References
TM 9-2355-106-10
TM 9-2355-106-23P
WP 0786
WP 0782

Equipment Condition
Parking brake set (TM 9 2355-106-10)
Transmission set in NEUTRAL (N) (TM 9 2355-106-10)
Engine off (TM 9 2355-106-10)
MAIN POWER switch off (TM 9 2355-106-10)
Wheels chocked (TM 9 2355-106-10)
Air Conditioning (A/C) condenser panel removed (WP 0672)
Step and bracket removed (WP 0656)
Exterior battery box armor door removed (WP 0604)
Exterior fuel tank armor door removed (WP 0605)

WARNING

Belly armor is heavy (900 lbs). Belly armor removal should only be done during maintenance operations. Use the belly armor removal/installer kit and follow procedures that are provided. Do not attempt to lift without the proper lifting device. Failure to comply may result in serious injury or death to personnel.

BELLY ARMOR REMOVAL AND INSTALLATION - (CONTINUED)

REMOVAL

1. Remove six bolts (Figure 1, Item 1 and 3), washers, and nuts from rear belly armor plate (Figure 1, Item 2). Left side shown; right side similar.

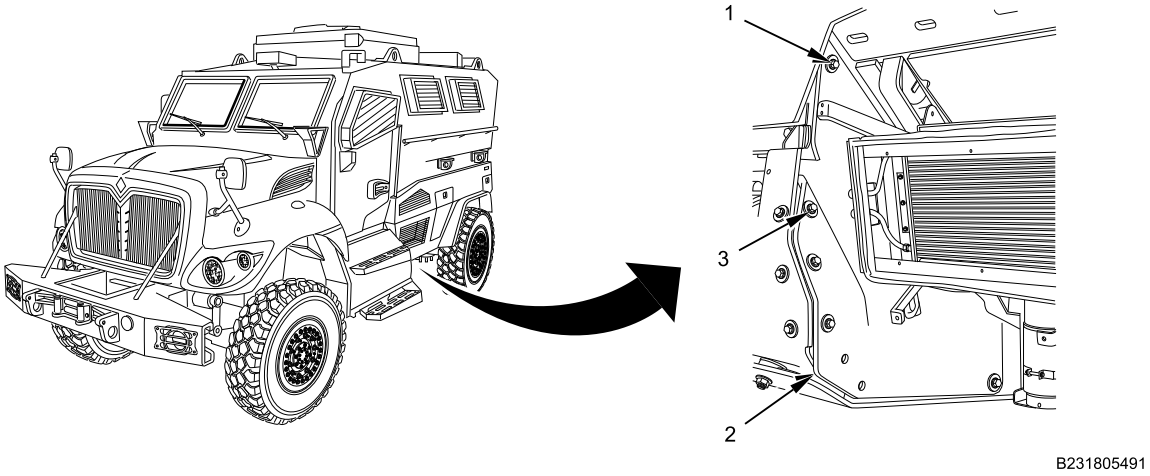

Figure 1. Left Side Rear Belly Armor Plate.

2. Remove rear belly armor plate (Figure 1, Item 2).
3. Remove eight bolts (Figure 2, Item 1 and 2) and washers from fuel tank cover plate (Figure 2, Item 3).

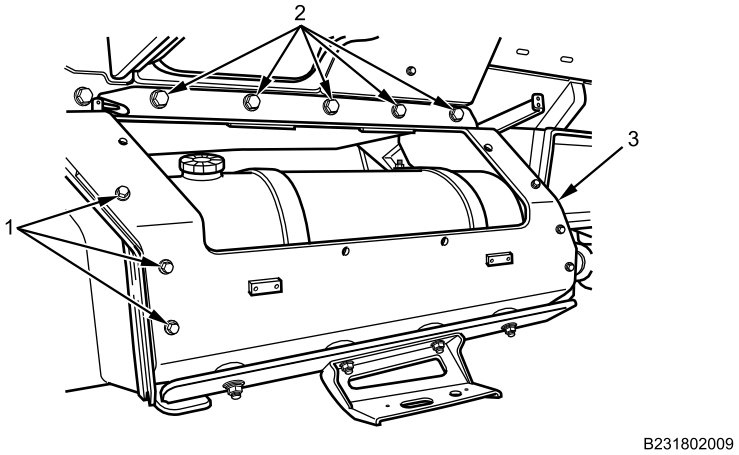

Figure 2. Fuel Tank Cover Plate.

BELLY ARMOR REMOVAL AND INSTALLATION - (CONTINUED)

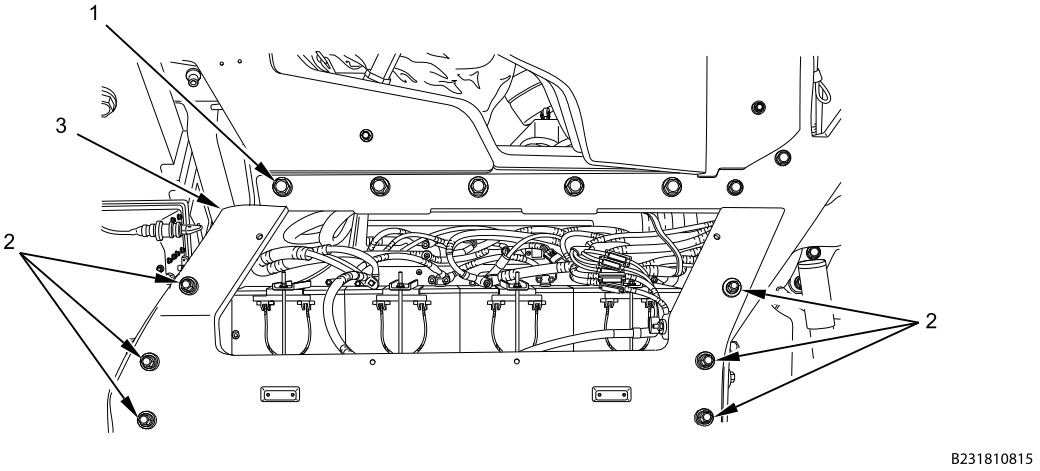

Figure 3. Battery Box Cover.

4. Remove five bolts (Figure 3, Item 1) and washers from battery box cover plate (Figure 3, Item 3).
5. Remove six bolts (Figure 3, Item 2) and washers from battery box cover plate (Figure 3, Item 3).
6. With assistant, remove two bolts (Figure 4, Item 1), nuts, and rubber bushings from lower right side battery box cover plate (Figure 4, Item 2). Remove battery box cover plate.

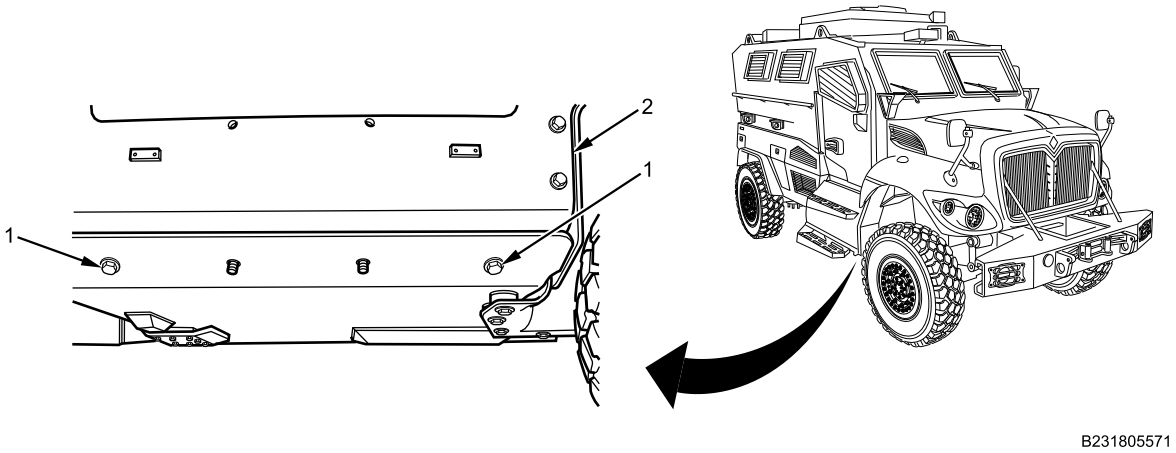

Figure 4. Right Side Battery Box.

BELLY ARMOR REMOVAL AND INSTALLATION - (CONTINUED)

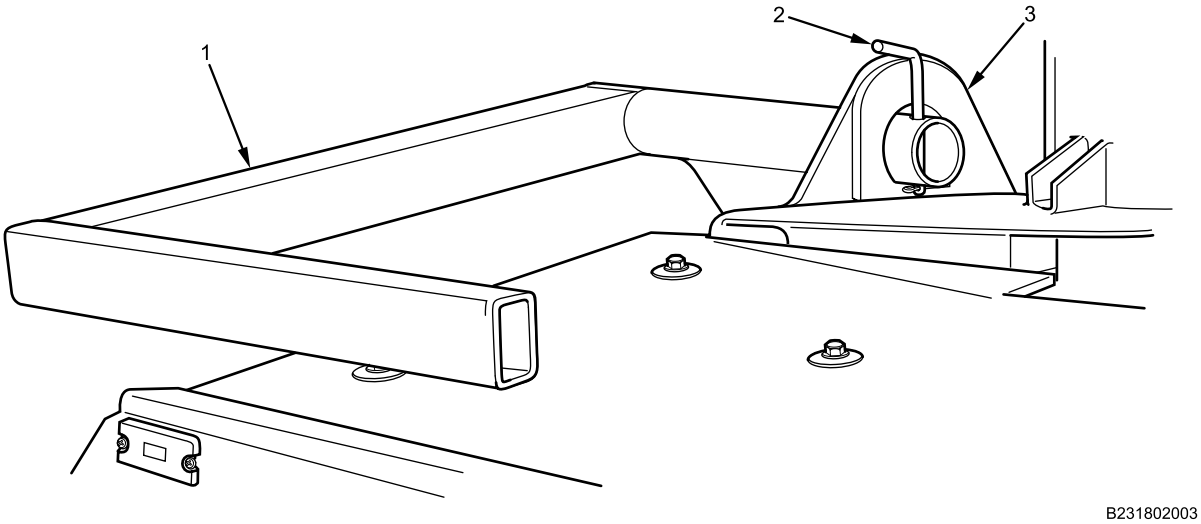

Figure 5. Belly Armor Kit Support. Right side shown; left side similar.

NOTE

Ensure cabin doors are closed prior to installing belly armor support kit brackets.

7. Install right side belly armor kit support (Figure 5, Item 1) through lifting eye bracket (Figure 5, Item 3) and install retaining pin (Figure 5, Item 2).
8. Install lifting sling (Figure 6, Item 1) on each corner of support (Figure 6, Item 2). Left side shown; right side similar.

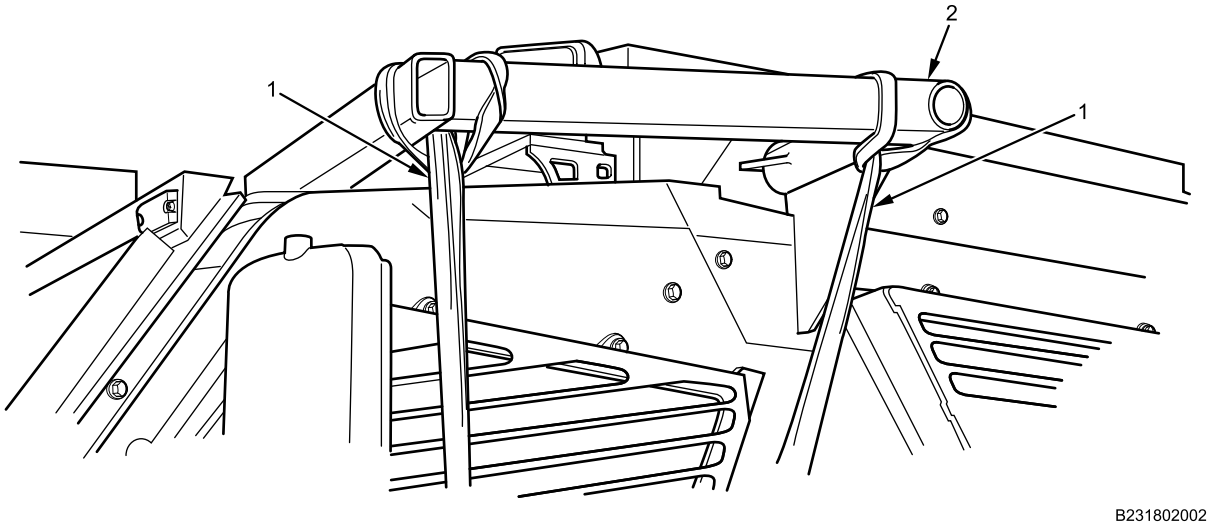

Figure 6. Belly Armor Kit Support Straps.

NOTE

Cross-chain hoist mounting points: front hoist to rear cover, rear hoist to front cover.

9. Attach chain hoists (Figure 7, Item 1) on fuel tank cover plate (Figure 7, Item 2) with two armor bolts (Figure 7, Item 3) and washers that where previously removed.

BELLY ARMOR REMOVAL AND INSTALLATION - (CONTINUED)

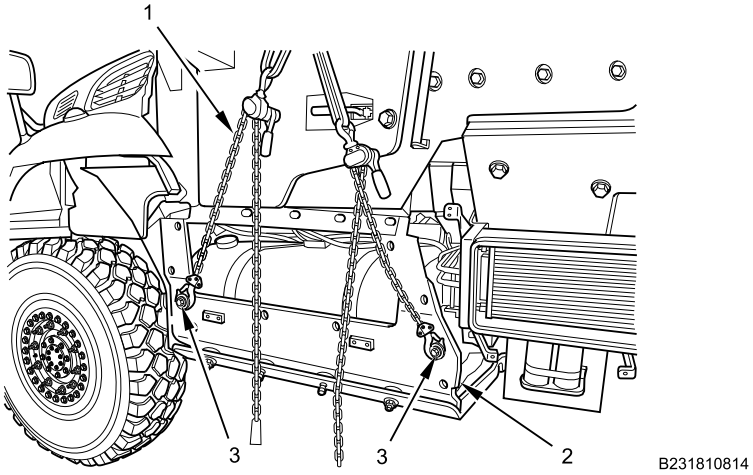

Figure 7. Left Side Chain Hoist.

10. Attach chain hoists (Figure 7, Item 1) to lifting slings.
11. Tension chain hoists (Figure 7, Item 1) as required to support belly armor plate and fuel tank cover (Figure 7, Item 2).

BELLY ARMOR REMOVAL AND INSTALLATION - (CONTINUED)

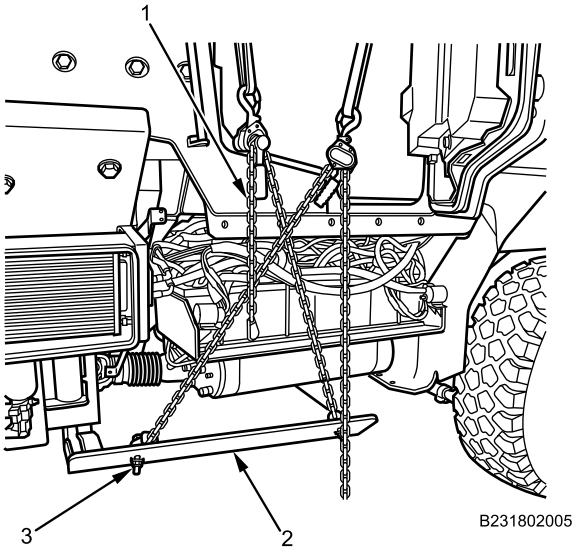

Figure 8. Right Side Chain Hoist.

NOTE

Cross-chain hoist mounting points: front chain hoist to rear belly armor, rear chain hoist to front belly armor.

12. Attach chain hoists (Figure 8, Item 1) to lower right side belly armor (Figure 8, Item 2) boltholes with two armor bolts (Figure 8, Item 3) and washers previously removed. Tension chain hoist as required to support belly armor plate.
13. Remove two bolts (Figure 9, Item 1), nuts, washers, and rubber bushings from belly armor center mount (Figure 9, Item 2).

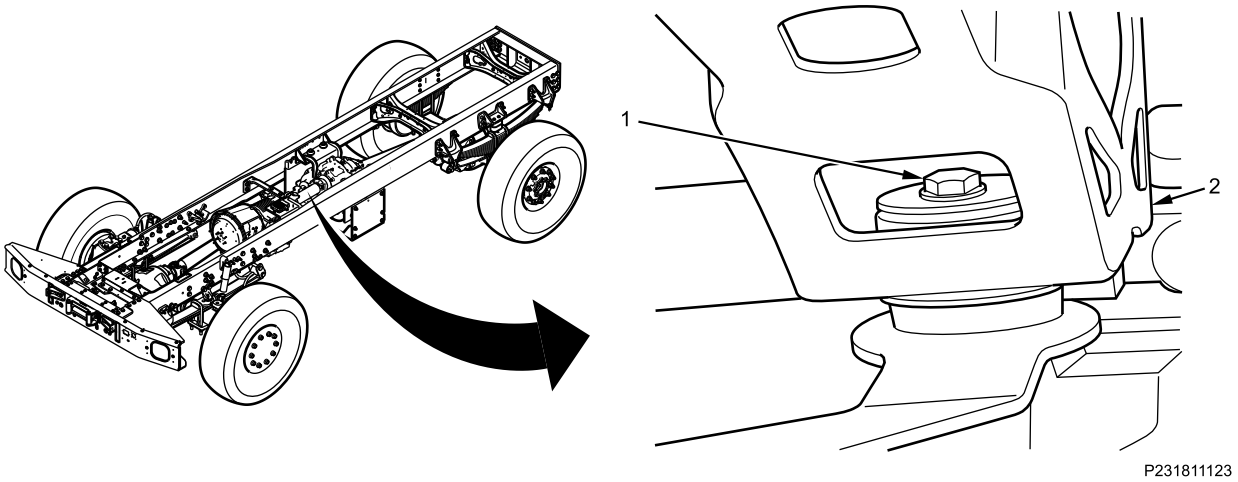

Figure 9. Belly Armor Center Mount.

14. Remove five bolts (Figure 10, Item 1), nuts, washers, and rubber bushings from right front belly armor (Figure 10, Item 2). Adjust sling tension as required.

BELLY ARMOR REMOVAL AND INSTALLATION - (CONTINUED)

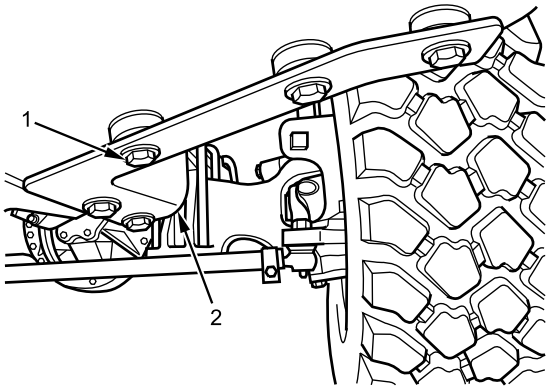

B231802006

Figure 10. Right Front Belly Armor.

WARNING

Use extreme caution when removing belly armor fasteners. Belly armor will be supported only by chain hoist and lifting sling after mounting bolts are removed. Ensure belly armor does not fall, and lower load as soon as possible. Failure to comply may result in damage to equipment and serious injury or death to personnel.

15. Remove five bolts (Figure 11, Item 1), nuts, washers, and rubber bushings from left front belly armor (Figure 11, Item 2).

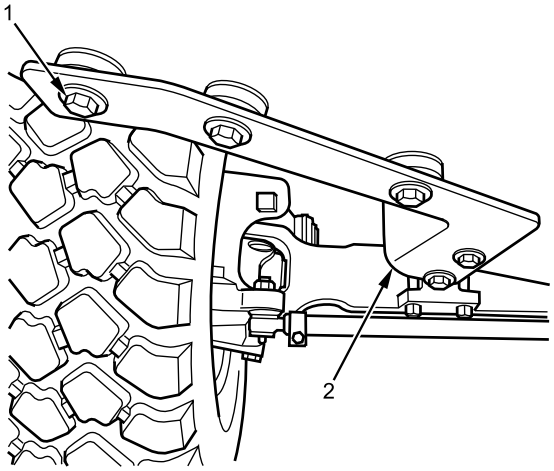

B231802007

Figure 11. Left Front Belly Armor.

BELLY ARMOR REMOVAL AND INSTALLATION - (CONTINUED)

16. Lower belly armor plate (Figure 12, Item 1) to ground, while tensioning chain hoists (Figure 12, Item 2) evenly on both sides of vehicle as needed.

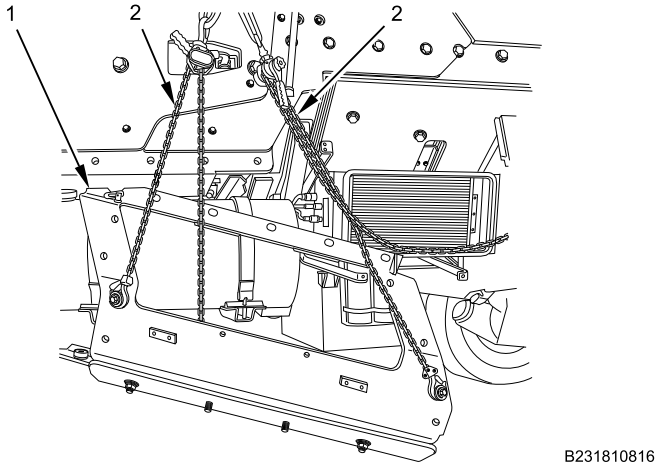

Figure 12. Left Belly Armor Plate.

17. Remove chain hoists (Figure 13, Item 1) from belly armor (Figure 13, Item 2).

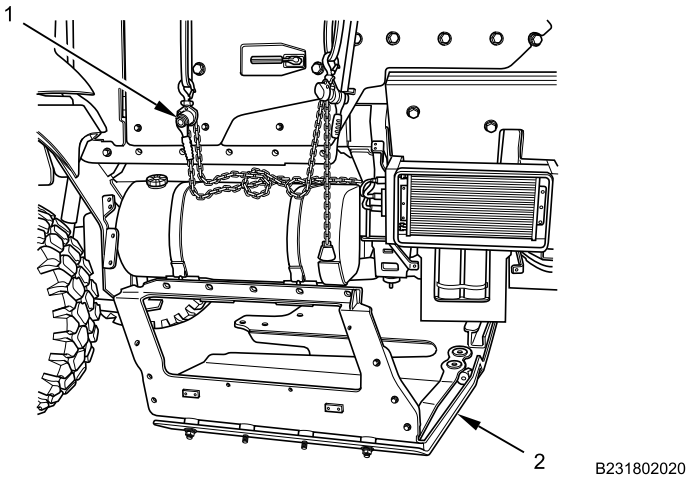

Figure 13. Fuel Tank Cover and Chain Hoist.

18. With assistant, remove belly armor (Figure 13, Item 2) from under vehicle.
19. Inspect all bushings and fasteners for wear or damage. Replace as necessary.

END OF TASK

BELLY ARMOR REMOVAL AND INSTALLATION - (CONTINUED)

DISASSEMBLY

1. Remove four bolts (Figure 14, Item 2), nuts, washers, and bushings from fuel tank cover plate (Figure 14, Item 1). Remove fuel tank cover plate from belly armor.

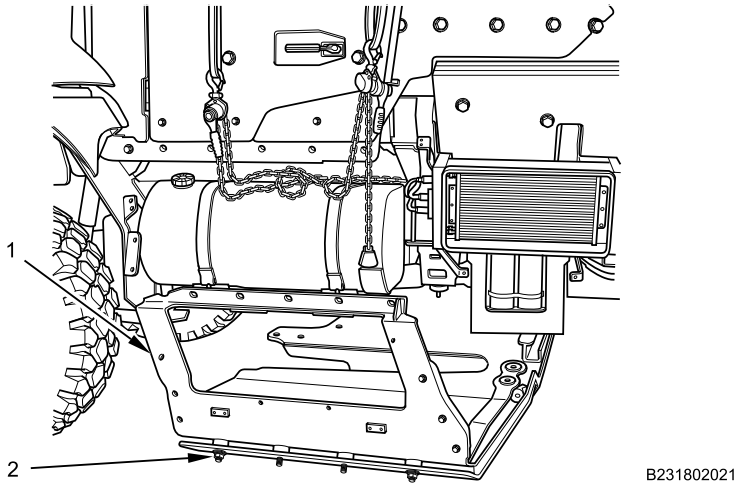

Figure 14. Belly Armor and Fuel Tank Cover Plate.

END OF TASK

BELLY ARMOR REMOVAL AND INSTALLATION - (CONTINUED)

ASSEMBLY

WARNING

Belly armor is heavy (900 lbs). Belly armor removal should only be done during maintenance operations. Use the belly armor removal/installer kit and follow procedures that are provided. Do not attempt to lift without the proper lifting device. Failure to comply may result in serious injury or death to personnel.

NOTE

Install bolts with nuts outboard or face down.

1. Install fuel tank cover plate (Figure 15, Item 1) on belly armor with four bolts, washers, bushings and two outboard nuts (Figure 15, Item 2). Torque bolts to 100 lb-ft (136 N•m).

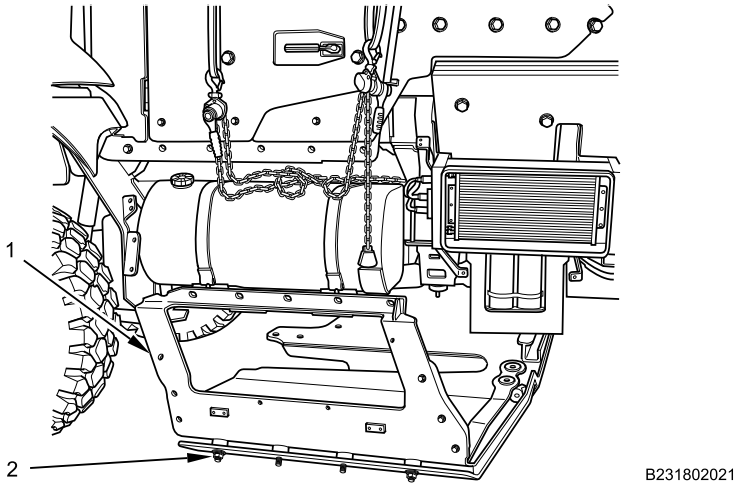

Figure 15. Belly Armor and Fuel Tank Cover Plate.

2. With assistant, position belly armor with fuel tank cover plate (Figure 15, Item 1) under vehicle.

END OF TASK

BELLY ARMOR REMOVAL AND INSTALLATION - (CONTINUED)

INSTALLATION

WARNING

Corrosion preventive compound is toxic. Use only in well-ventilated area. Do not get in eyes; wear chemical safety goggles and full-face shield when using. Avoid contact with skin and wear rubber or plastic, solvent-resistant gloves. In case of contact, remove contaminated clothing and immediately wash area with soap and water. If compound contacts eyes, flush eyes with large amounts of water for at least 15 minutes and get immediate medical attention. If swallowed, do not induce vomiting; contact a physician immediately. Failure to comply may result in serious injury or death to personnel.

NOTE

Cross-chain hoist mounting points: front hoist to rear cover, rear hoist to front cover.

1. Attach chain hoist (Figure 16, Item 1) to fuel tank cover plate with two bolts (Figure 16, Item 3), washers, and nuts. Tension chain hoist as required to support belly armor and fuel tank cover plate (Figure 16, Item 2).

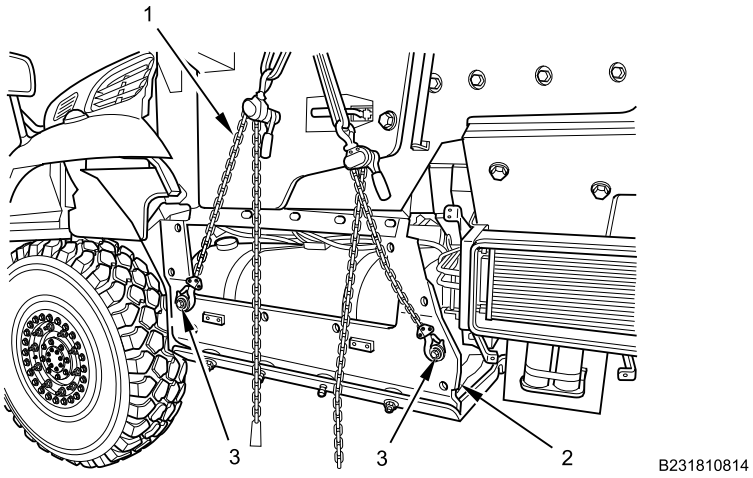

Figure 16. Left Side Chain Hoist.

BELLY ARMOR REMOVAL AND INSTALLATION - (CONTINUED)

NOTE

Cross-chain hoist mounting points: front chain hoist to rear belly armor, rear chain hoist to front belly armor.

2. Attach chain hoist (Figure 17, Item 1) to lower right side belly armor (Figure 17, Item 3) with two armor bolts (Figure 17, Item 2), washers, and nuts. Tension chain hoist as required to support belly armor plate.

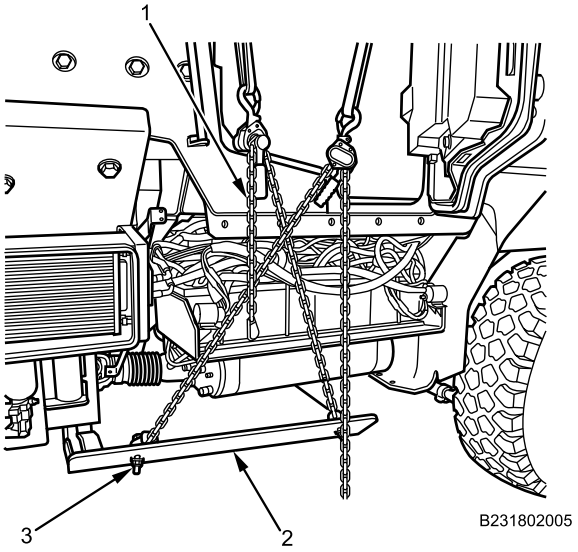

Figure 17. Right Side Chain Hoist.

3. Loosen but do not remove eight wheel deflector bolts (Figure 18, Item 1) from wheel deflector (Figure 18, Item 2). Left side shown, right side similar.

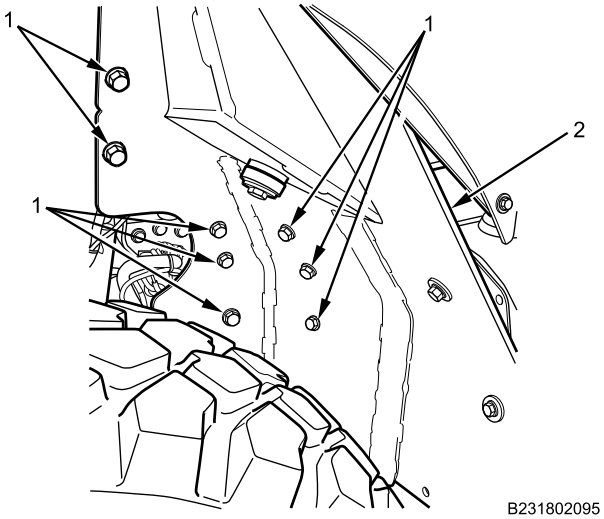

Figure 18. Wheel Deflector Bolts.

BELLY ARMOR REMOVAL AND INSTALLATION - (CONTINUED)

4. Raise belly armor and fuel tank cover plate (Figure 19, Item 1) evenly into position with chain hoists (Figure 19, Item 2) on both sides of vehicle while observing drive shaft cutout and fuel tank strap location for clearance.

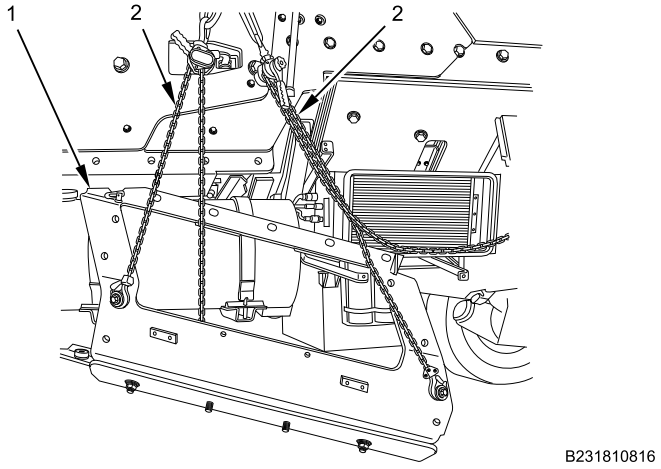

Figure 19. Belly Armor Plate.

5. Apply corrosion preventive compound on five left front belly armor mounting bolts. Do not tighten bolts at this time.
6. Install five bolts (Figure 20, Item 1), rubber bushings, washers, and nuts on left front belly armor plate (Figure 20, Item 2). Do not tighten bolts at this time.

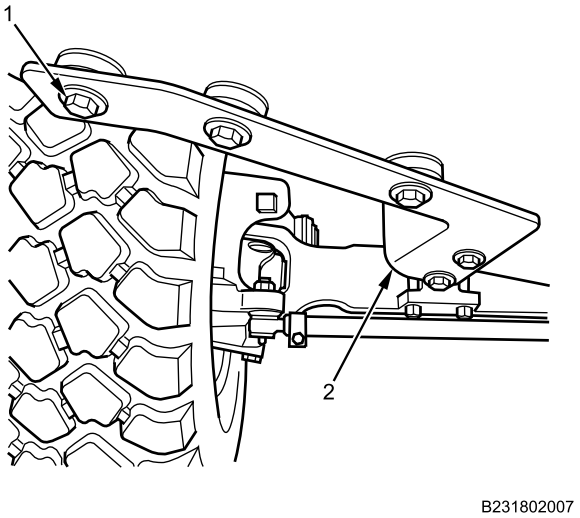

Figure 20. Left Front Belly Armor.

7. Apply corrosion preventive compound on five right front belly armor mounting bolts.

BELLY ARMOR REMOVAL AND INSTALLATION - (CONTINUED)

8. Install five bolts (Figure 21, Item 1), rubber bushings, washers, and nuts on right front belly armor plate (Figure 21, Item 2). Do not tighten bolts at this time.

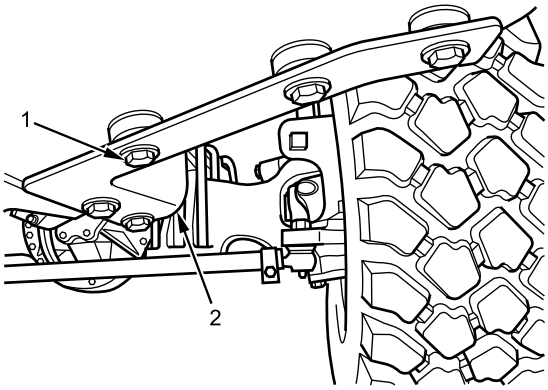

B231802006

Figure 21. Right Front Belly Armor.

9. Apply corrosion preventive compound on two rear center belly armor mounting bolts.

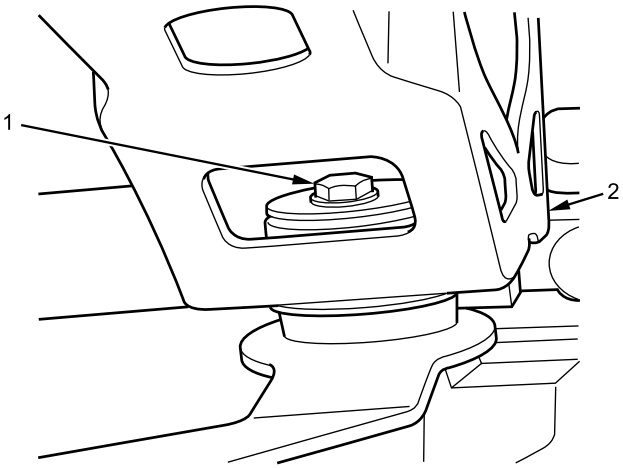

B231802008

Figure 22. Belly Armor Center Mount.

10. Install two bolts (Figure 22, Item 1), rubber bushings, washers, and nuts on rear center belly armor mount (Figure 22, Item 2). Torque bolts to 200 lb-ft (271 N•m).
11. Torque all previously installed front belly armor-to-wheel deflector bolts to 100 lb-ft (136 N•m).
12. Tighten all previously installed front wheel deflector bolts securely.
13. Remove two armor bolts (Figure 23, Item 3) and washers securing chain hoists (Figure 23, Item 1) on fuel tank cover plate (Figure 23, Item 2).

BELLY ARMOR REMOVAL AND INSTALLATION - (CONTINUED)

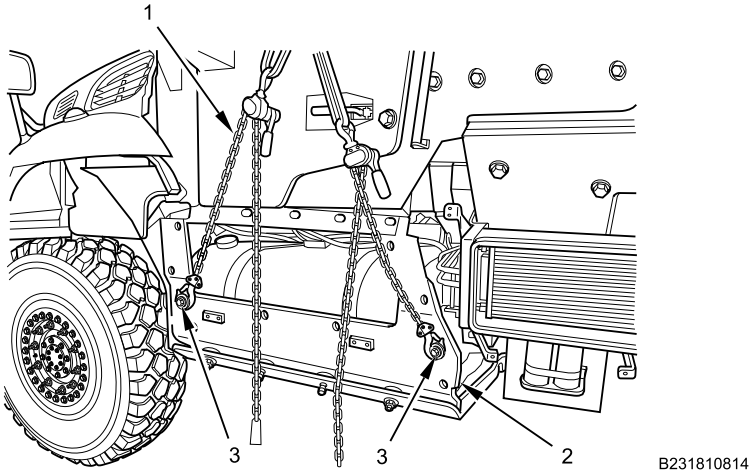

Figure 23. Left Side Chain Hoist.

14. Remove support brackets (Figure 24, Item 2), chain hoist, and straps (Figure 24, Item 1).

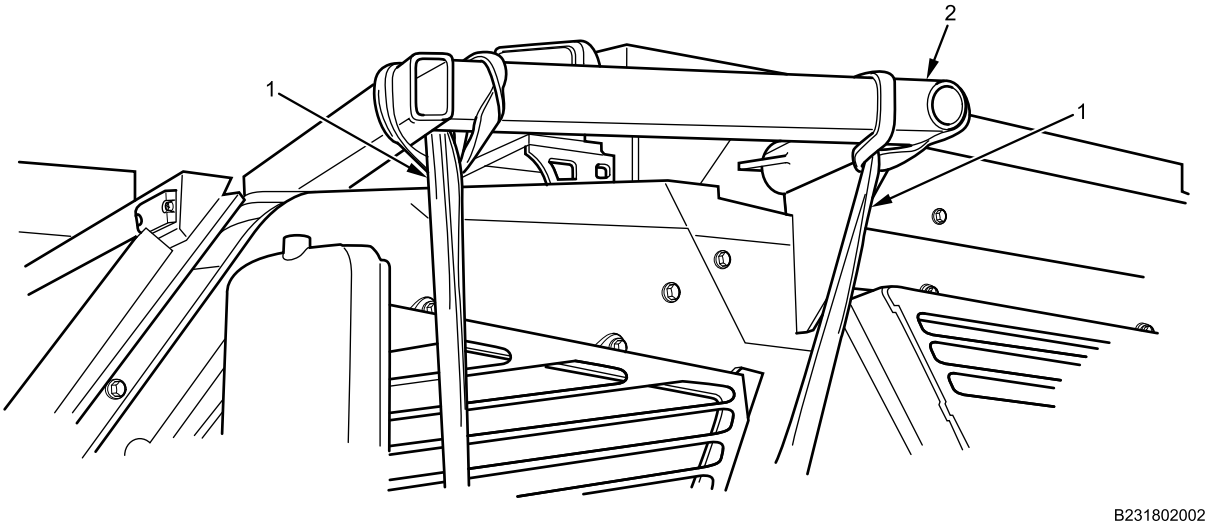

Figure 24. Belly Armor Kit Support.

BELLY ARMOR REMOVAL AND INSTALLATION - (CONTINUED)

15. Install two bolts (Figure 24, Item 1), rubber bushings, nuts, and washers on lower right side battery box cover (Figure 24, Item 2). Torque bolts to 100 lb-ft (136 N•m).

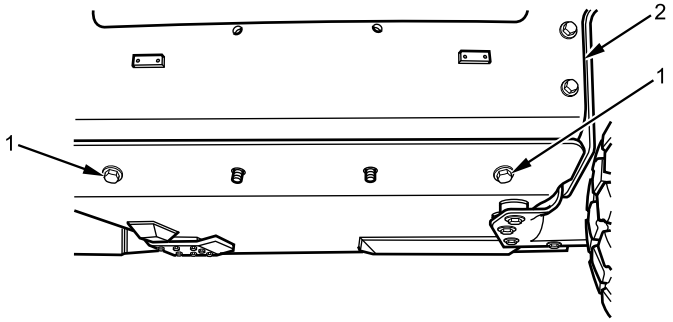

B231802014

Figure 25. Right Side Battery Box.

16. Install six bolts (Figure 26, Item 2) and washers on upper fuel tank cover plate (Figure 26, Item 3). Torque bolts to 100 lb-ft (136 N•m).

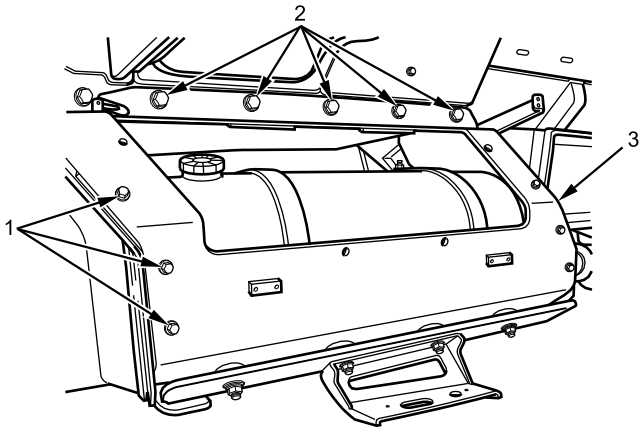

B231802009

Figure 26. Fuel Tank Cover Plate.

17. Install three bolts (Figure 26, Item 1) and washers on fuel tank cover plate (Figure 26, Item 3). Torque bolts to 56-65 lb-ft (76-88 N•m).

BELLY ARMOR REMOVAL AND INSTALLATION - (CONTINUED)

18. Install five bolts (Figure 27, Item 1) and washers on battery box cover plate (Figure 27, Item 3). Torque bolts to 100 lb-ft (136 N•m).

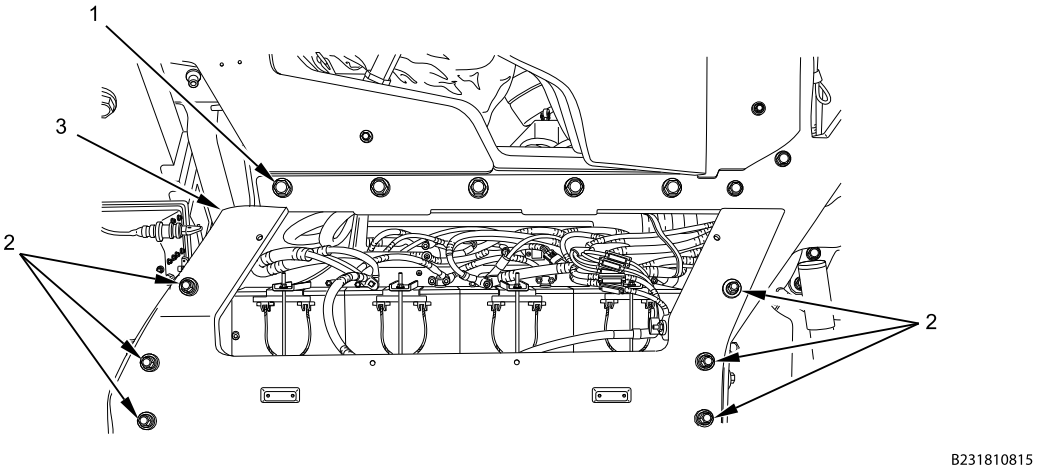

Figure 27. Battery Box Cover Plate.

19. Install six bolts (Figure 27, Item 2) and washers on battery box cover plate (Figure 27, Item 3). Torque bolts to 56-65 lb-ft (76-88 N•m).
20. Install left side rear armor plate (Figure 28, Item 2) with five bolts (Figure 28, Item 1), washers, and nuts. Torque bolts to 56-65 lb-ft (76-88 N•m). Left side shown; right side similar.

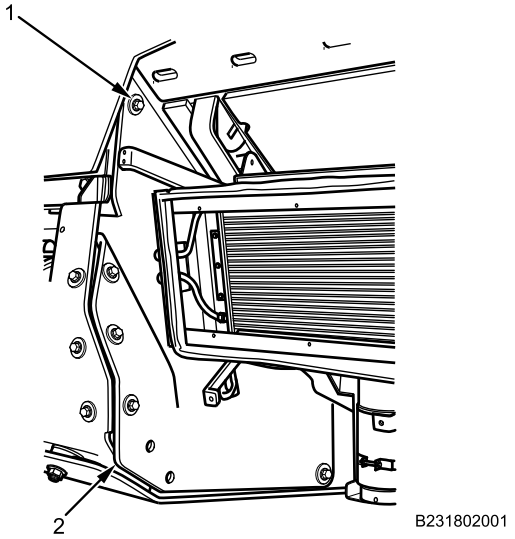

Figure 28. Left Side Rear Belly Armor Plate.

END OF TASK

FOLLOW-ON MAINTENANCE

1. Install exterior fuel tank armor door (WP 0605).
2. Install exterior battery box armor door (WP 0604).
3. Install step and bracket (WP 0656).

BELLY ARMOR REMOVAL AND INSTALLATION - (CONTINUED)

4. Install A/C condenser panel (WP 0672).
5. Remove wheel chocks (TM 9-2355-106-10).

END OF TASK

END OF WORK PACKAGE

FIELD MAINTENANCE

CABIN DOOR REMOVAL AND INSTALLATION

INITIAL SETUP:

Tools and Special Tools
General Mechanic's Tool Kit (GMTK) (WP 0795, Item 37)
Lifting sling (WP 0795, Item 68)
Lifting device capable of lifting 5,000 lbs (2,268 kgs) (WP 0795, Item 67)

Materials/Parts
Goggles, industrial (WP 0794, Item 20)
Faceshield, industrial (WP 0794, Item 16)
Compound (WP 0794, Item 13)
Gloves (WP 0794, Item 18)

Personnel Required
Maintainer (2)

References
TM 9-2355-106-10
TM 9-2355-106-23P
WP 0782

Equipment Condition
Parking brake set (TM 9-2355-106-10)
Transmission set in NEUTRAL (N) (TM 9-2355-106-10)
Engine off (TM 9-2355-106-10)
MAIN POWER switch off (TM 9-2355-106-10)
Wheels chocked (TM 9-2355-106-10)
Air tanks and reservoirs drained (TM 9-2355-106-10)
Cabin door opened and secured (WP 0608)
Door armor panel removed (WP 0609)
Side cowl armor panel removed (WP 0644)
Door window armor glass removed (WP 0653)
A-pillar trim removed (WP 0642)

WARNING

Armor parts are heavy. Use care when removing or installing. Do not attempt to lift without an assistant and lifting device. Wear gloves. Failure to comply may result in serious injury or death to personnel.

Use the appropriate lifting sling and chain hoist for the type of load. Clean lifting strap slings and chain hoists prior to use, and inspect for damage such as wear, corrosion, elongation, tears, or punctures. Replace lifting strap slings and chain hoists that are damaged. Failure to comply may result in damage to equipment and injury or death to personnel.

CABIN DOOR REMOVAL AND INSTALLATION - (CONTINUED)

NOTE

Cabin door removal and installation task instructions should be discussed prior to starting the door replacement task, to ensure instructions are understood by all participants. Mark and label all connections and reference areas before removal of component parts.

Vehicle is equipped with either a single-piston or dual-piston door assist. If the door trim panel is one piece, the single piston system is used. If the door trim panel is two pieces, the dual-piston system is used. If parts are unavailable, upgrade to the two-piece door trim panel, dual-piston door system.

Right door shown, left door similar.

REMOVAL

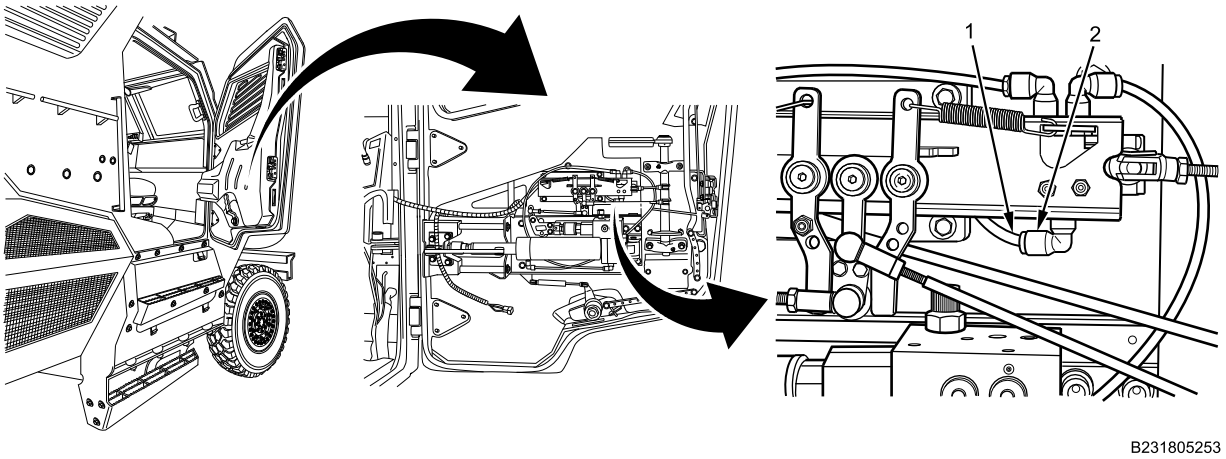

Figure 1. Air Line Disconnected from Door Actuator Connector (Single Piston).

1. Secure cabin door through window opening with lifting sling and lifting device. Apply tension to lifting sling to support weight of door.

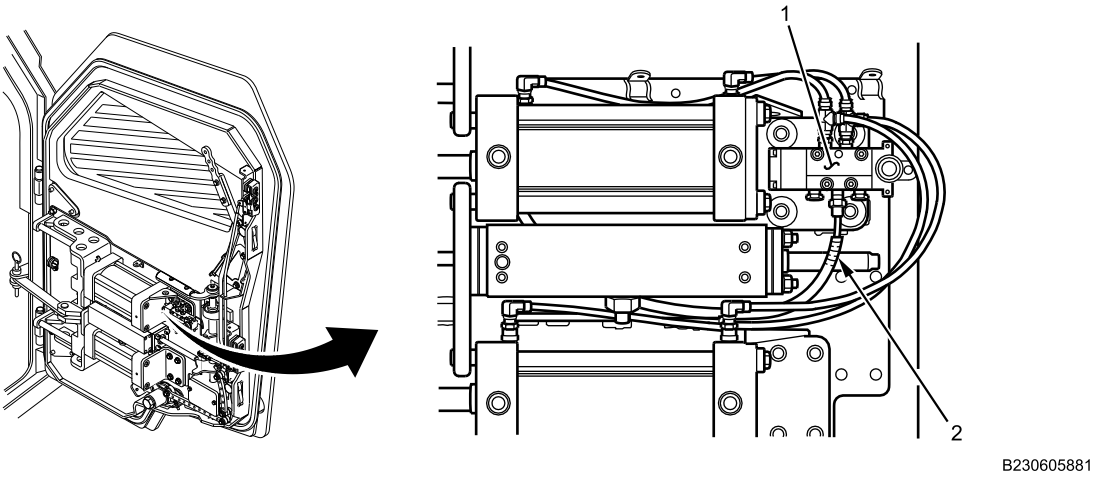

Figure 2. Air Line Disconnected from Door Actuator Connector (Dual Piston).

2. Disconnect air line (Figure 1, Item 1) or (Figure 2, Item 2) from door actuator connector (Figure 1, Item 2) or (Figure 2, Item 1).

CABIN DOOR REMOVAL AND INSTALLATION - (CONTINUED)

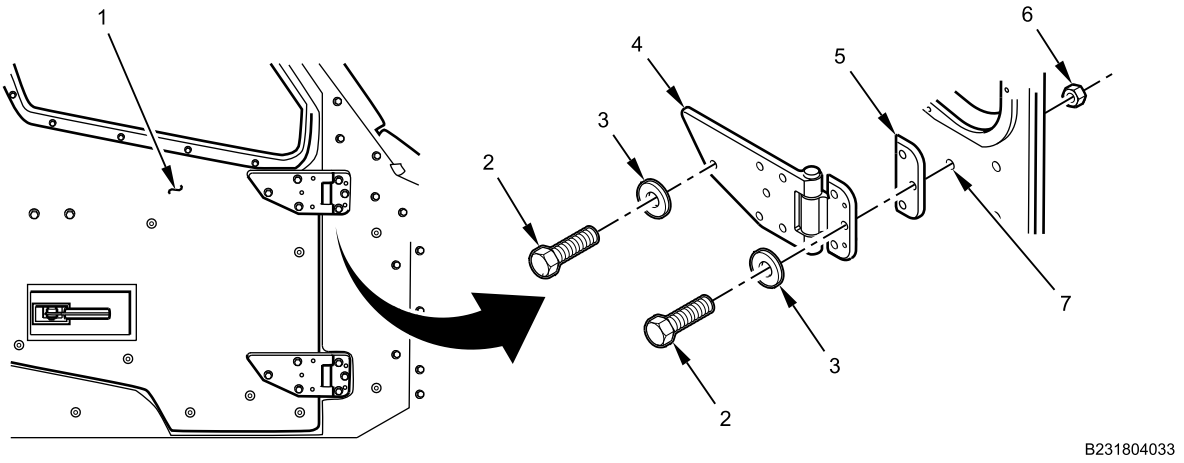

Figure 3. Upper and Lower Door Hinge Removal.

3. Remove six hinge mounting bolts (Figure 3, Item 2), washers, (Figure 3, Item 3), nuts (Figure 3, Item 7) and spacer plate (Figure 3, Item 5) from door hinge (Figure 3, Item 4) and door (Figure 3, Item 6).

WARNING

Prior to moving heavy components with lifting device, clear path of travel and clear personnel from area. Use proper lifting device for weight of item. Use extreme caution if lifting objects overhead or backing up. Stop and lower load as soon as possible. Failure to comply may result in damage to equipment and serious injury or death to personnel.

4. With lifting device and assistant, slowly lift and remove cabin door (Figure 3, Item 1) from vehicle.

END OF TASK

CABIN DOOR REMOVAL AND INSTALLATION - (CONTINUED)

INSTALLATION

WARNING

Corrosion preventive compound is toxic. Use only in well-ventilated area. Do not get in eyes; wear chemical safety goggles and full-face shield when using. Avoid contact with skin and wear rubber or plastic, solvent-resistant gloves. In case of contact, remove contaminated clothing and immediately wash area with soap and water. If compound contacts eyes, flush eyes with large amounts of water for at least 15 minutes and get immediate medical attention. If swallowed, do not induce vomiting; contact a physician immediately. Failure to comply may result in serious injury or death to personnel.

NOTE

On some vehicles, replacement door may require that vehicle mounting hinge boltholes be enlarged.

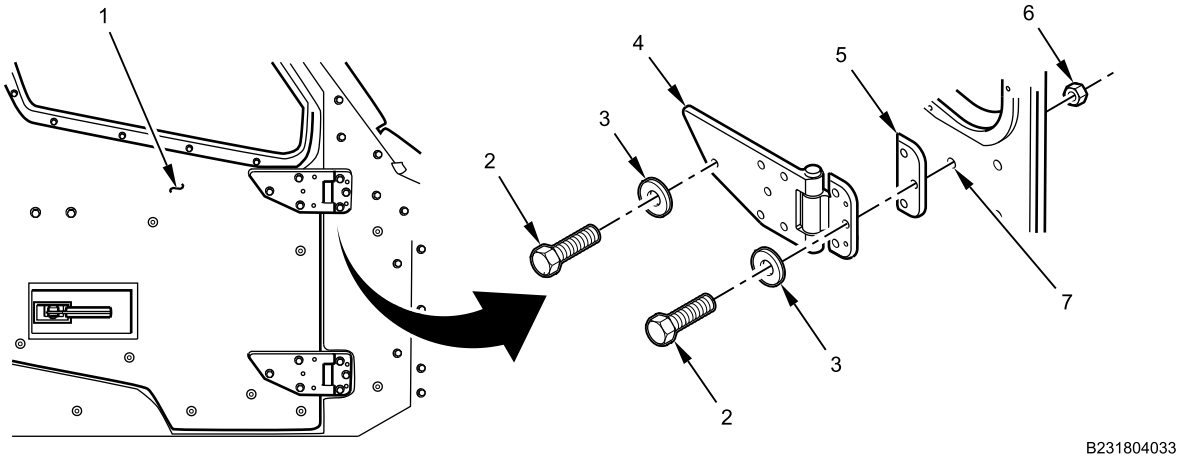

Figure 4. Installation of Upper and Lower Door Hinges.

1. Apply corrosion preventive compound to six hinge mounting bolts (Figure 4, Item 2), six boltholes (Figure 4, Item 6) on vehicle, and six hinge mounting holes (Figure 4, Item 4).
2. Secure cabin door (Figure 4, Item 1) through window opening with lifting sling and lifting device.
3. With lifting device and assistant, lift cabin door (Figure 4, Item 1) to vehicle and align door hinge (Figure 4, Item 4) and spacer plate (Figure 4, Item 5) with six mounting holes (Figure 4, Item 6) on vehicle.
4. Loosely install two center hinge mounting bolts (Figure 4, Item 2), washers (Figure 4, Item 3), and nuts (Figure 4, Item 7).
5. Loosely install remaining four hinge mounting bolts (Figure 4, Item 2), washers (Figure 4, Item 3), and nuts (Figure 4, Item 7) on upper and lower door hinges (Figure 4, Item 4).
6. Lightly tighten center mounting bolts (Figure 4, Item 2), check cabin door (Figure 4, Item 1) alignment, and test door operation.
7. Remove lifting sling and lifting device.
8. If necessary, adjust cabin door (Figure 4, Item 1) to verify proper opening and closing.
9. Tighten 12 hinge mounting bolts (Figure 4, Item 2) securely.

CABIN DOOR REMOVAL AND INSTALLATION - (CONTINUED)

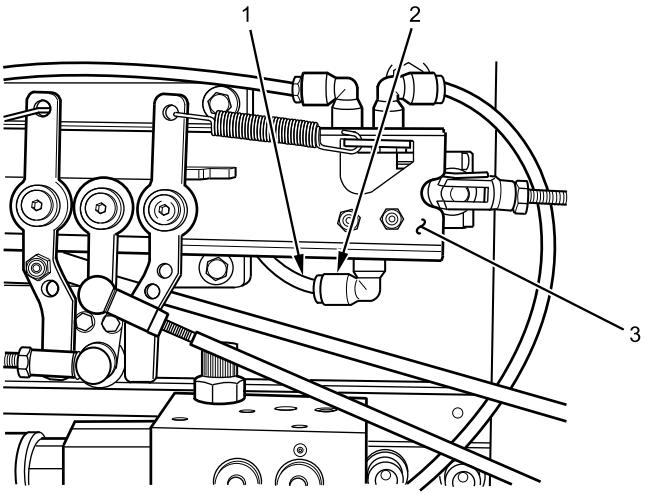

B231803400

Figure 5. Air Line Secured to Door Actuator Connector (Single Piston).

NOTE

Perform following step for single piston models only.

10. Route air line (Figure 5, Item 1) inside upper actuator housing (Figure 5, Item 3) and install air line on door actuator connector (Figure 5, Item 2).

CABIN DOOR REMOVAL AND INSTALLATION - (CONTINUED)

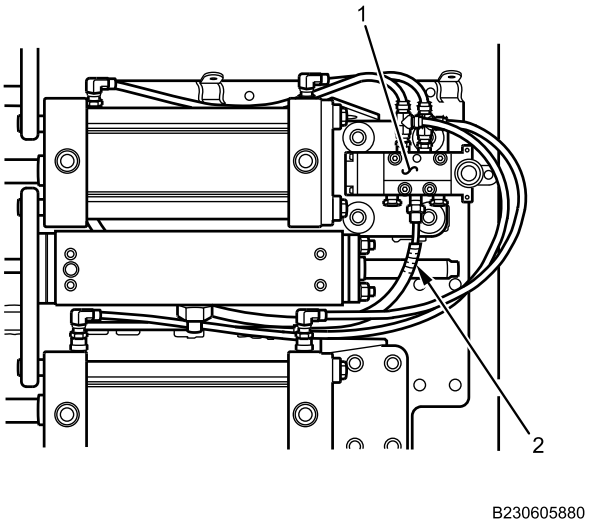

Figure 6. Air Line Secured to Door Actuator Connector (Dual Piston).

NOTE

Perform following step for dual piston models only.

11. Install air line (Figure 6, Item 2) on door actuator (Figure 6, Item 1).

END OF TASK

FOLLOW-ON MAINTENANCE

1. Install door window armor glass (WP 0653).
2. Install A-pillar trim (WP 0642).
3. Install side cowl armor panel (WP 0653).
4. Install door armor panel (WP 0644).
5. Turn MAIN POWER switch on (TM 9-2355-106-10).
6. Start engine and allow air pressure to build to normal operating range (TM 9-2355-106-10).
7. Turn engine off (TM 9-2355-106-10).
8. Turn MAIN POWER switch off (TM 9-2355-106-10).
9. Close cabin door WP 0608.
10. Remove wheel chocks (TM 9-2355-106-10).

END OF TASK

END OF WORK PACKAGE

FIELD MAINTENANCE

SECURING CABIN DOOR FOR SERVICE

INITIAL SETUP:

Tools and Special Tools
General Mechanic's Tool Kit (GMTK) (WP 0795, Item 37)
Belly Armor Removal/Installer Kit (WP 0795, Item 16)
Lifting sling, (2) (WP 0795, Item 68)

References
TM 9-2355-106-10
TM 9-2355-106-23P
WP 0782

Equipment Condition
Parking brake set (TM 9-2355-106-10)
Transmission set in NEUTRAL (N) (TM 9-2355-106-10)
Engine off (TM 9-2355-106-10)
MAIN POWER switch off (TM 9-2355-106-10)
Wheels chocked (TM 9-2355-106-10)
Cabin door open (TM 9-2355-106-10)

WARNING

Cabin door must be secured in the open position by using heavy duty winch straps to prevent accidental closure during vehicle maintenance. Pull door hinge pin prior to securing door open. Failure to comply may result in serious injury or death to personnel.

Use the appropriate lifting strap sling or chain hoist for the type of load. Always clean and inspect lifting strap slings and chain hoists prior to use. Inspect for damage such as wear, corrosion, elongation, tears, or punctures. Replace lifting strap slings or chain hoists that are damaged. Failure to comply may result in component damage and death or injury to personnel.

Cabin doors are heavy. Ensure that no one is standing directly behind the door before opening and closing it. Ensure that hands and feet are clear of the area before closing the door. Use caution when opening or closing the doors, especially when the vehicle is parked on an incline. Failure to comply may result in injury to personnel.

NOTE

Left side shown; right side similar.

SECURING CABIN DOOR FOR SERVICE - (CONTINUED)

INSTALLATION

1. Using rolling head pry bar, push end of lifting strap (Figure 1, Item 1) through opening between door (Figure 1, Item 3) and door armor plate (Figure 1, Item 5) near lower door latch plate (Figure 1, Item 4), and around armor plate bolt (Figure 1, Item 2).

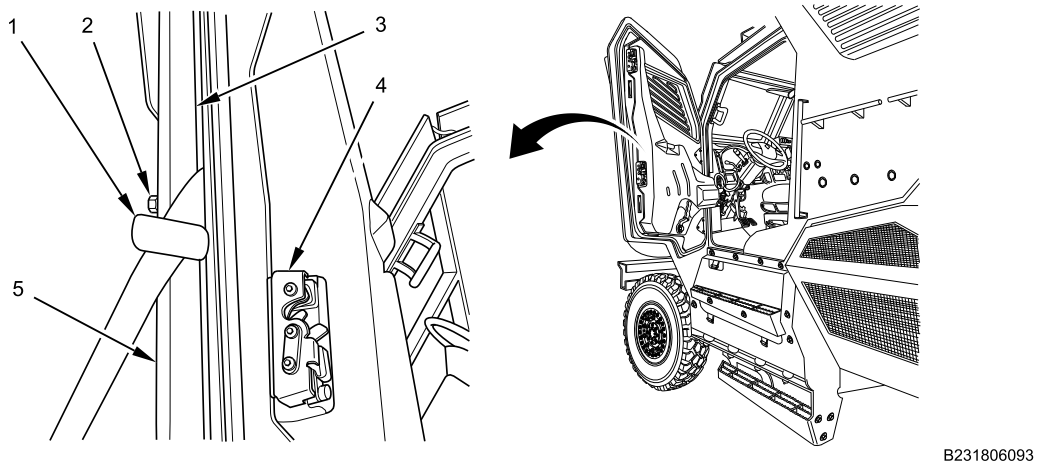

Figure 1. Door Armor Plate.

2. Using rolling head pry bar, pull end of lifting strap (Figure 1, Item 1) around armor plate bolt (Figure 1, Item 2) until both ends of lifting strap protrude through opening between door (Figure 1, Item 3) and door armor plate (Figure 1, Item 5).
3. Insert one end of lifting strap through loop of other end and pull to tighten lifting strap (Figure 1, Item 1) around armor plate bolt (Figure 1, Item 2).
4. Insert second lifting strap through front towing eye (Figure 2, Item 1), and through loop (Figure 2, Item 2) on other end of strap. Pull to tighten strap around front towing eye.

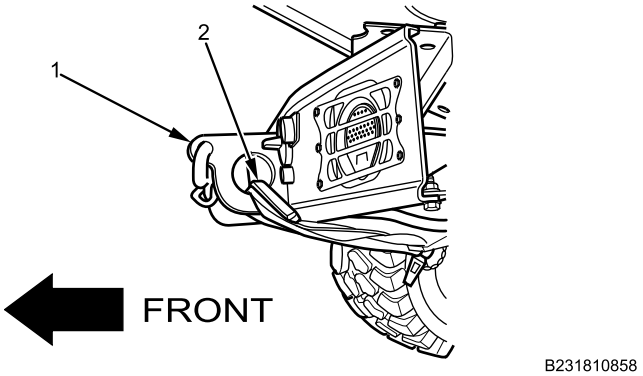

Figure 2. Front Towing Eye.

SECURING CABIN DOOR FOR SERVICE - (CONTINUED)

5. Attach chain hoist (Figure 3, Item 1) to lifting strap around front towing eye (Figure 3, Item 3).

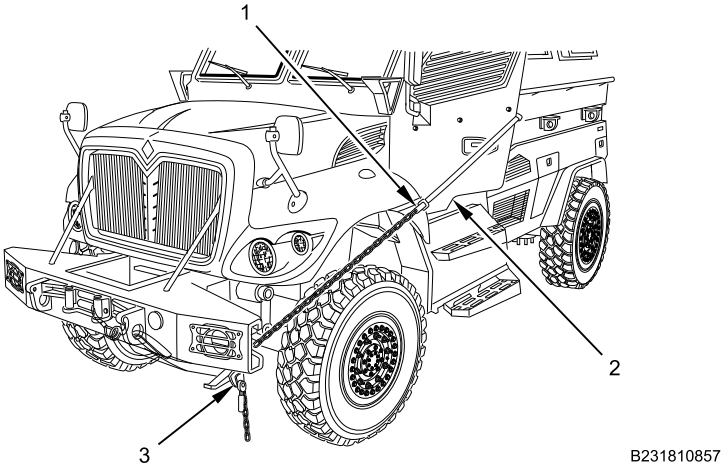

Figure 3. Chain Hoist.

6. Attach other end of chain hoist (Figure 3, Item 1) to lifting strap (Figure 3, Item 2) around door armor plate bolt.
7. Push down plunger on top of door actuator pin (Figure 4, Item 3), and remove door actuator pin (Figure 4, Item 4) and actuator rod (Figure 4, Item 1) from door actuator bracket (Figure 4, Item 2).

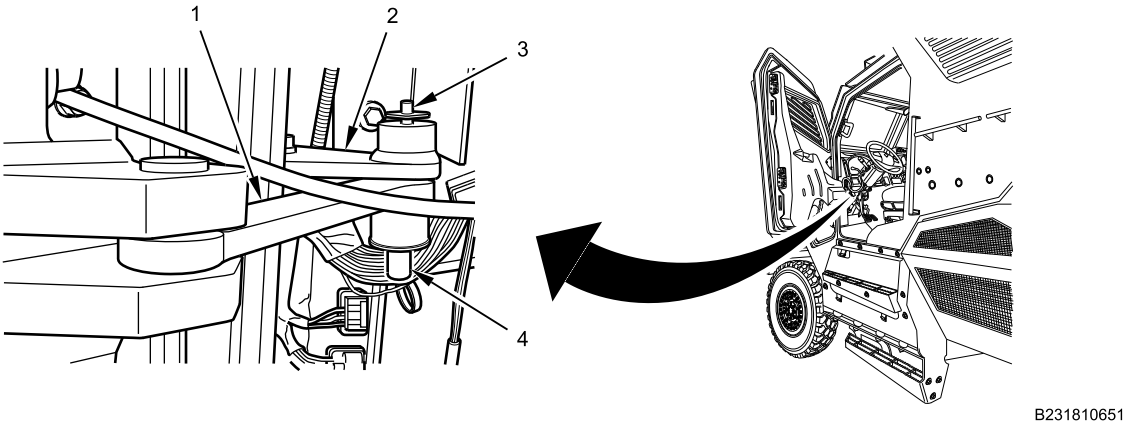

Figure 4. Door Actuator Rod.

8. Tension chain hoist (Figure 3, Item 1) until door is secured in fully open position.

END OF TASK

SECURING CABIN DOOR FOR SERVICE - (CONTINUED)

REMOVAL

WARNING

Cabin doors are heavy. Ensure that no one is standing directly behind the door before opening and closing it. Ensure that hands and feet are clear of the area before closing the door. Use caution when opening or closing the doors, especially when the vehicle is parked on an incline. Failure to comply may result in injury to personnel.

1. Release chain hoist tension.
2. Push down plunger on top of door actuator pin (Figure 5, Item 3), install actuator rod (Figure 5, Item 1) in door actuator bracket (Figure 5, Item 2), with door actuator pin (Figure 5, Item 4).

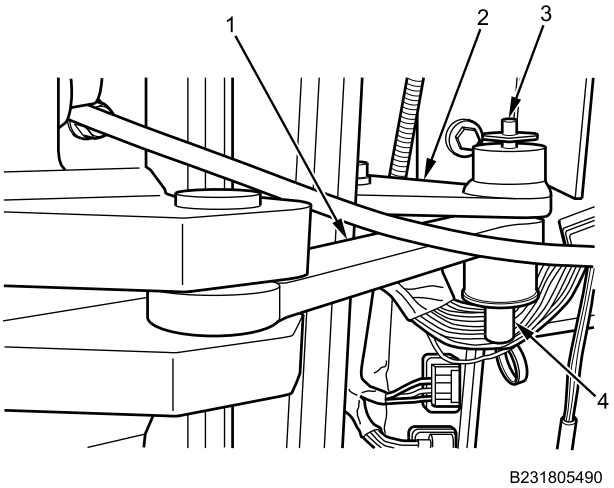

Figure 5. Door Actuator Rod.

3. Remove chain hoist (Figure 6, Item 1) from lifting strap around front towing eye (Figure 6, Item 3).

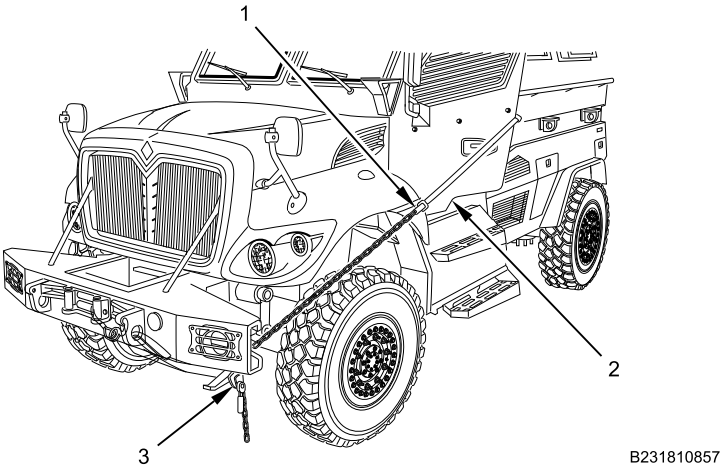

Figure 6. Chain Hoist.

4. Remove chain hoist (Figure 6, Item 1) from lifting strap (Figure 6, Item 2) around door armor plate bolt.

SECURING CABIN DOOR FOR SERVICE - (CONTINUED)

5. Remove lifting strap (Figure 7, Item 2) from front towing eye (Figure 7, Item 1).

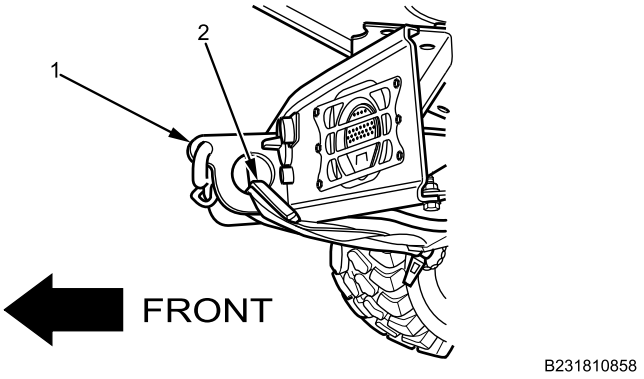

Figure 7. Front Towing Eye.

6. Using rolling head pry bar, remove loop end of lifting strap (Figure 8, Item 1) from around armor plate bolt (Figure 8, Item 2) between door (Figure 8, Item 3) and door armor plate (Figure 8, Item 5) near lower door latch plate (Figure 8, Item 5).

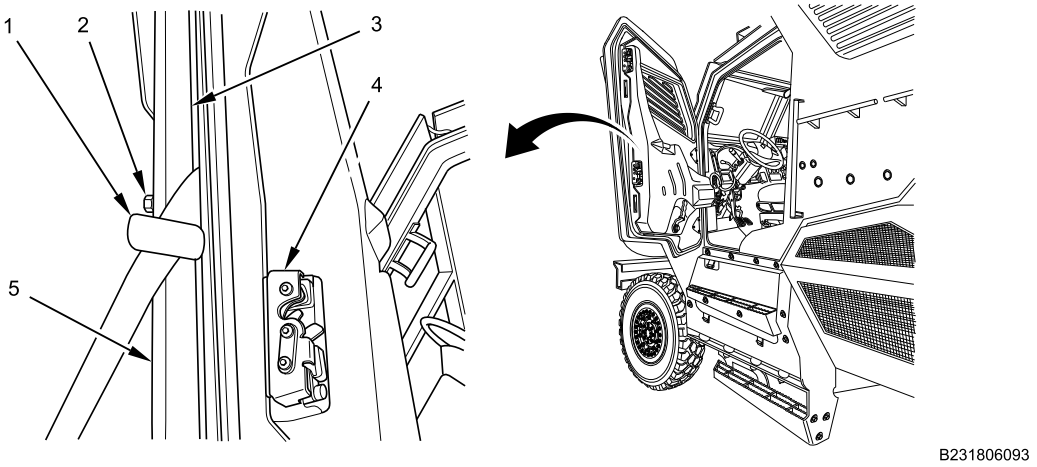

Figure 8. Door Armor Plate.

END OF TASK

FOLLOW-ON MAINTENANCE

1. Close cabin door (TM 9-2355-106-10).
2. Remove wheel chocks (TM 9-2355-106-10).

END OF TASK

END OF WORK PACKAGE

RECOMMENDED CHANGES TO PUBLICATIONS AND BLANK FORMS For use of this form, see AR 25-30; the proponent agency is OAASA.	Use Part II *(reverse)* for Repair Parts and Special Tool Lists (RPSTL) and Supply Catalogs/Supply Manuals (SC/SM).	DATE *Date you filled out this form.*
TO *(Forward to proponent of publication or form) (Include ZIP Code)* U.S. Army TACOM Life Cycle Management Command ATTN: AMSTA-LCL-MPP/TECH PUBS 6501 E. 11 Mile Road, Warren, MI 48397-5000	**FROM** *(Activity and location) (Include ZIP Code)* *Your mailing address*	

PART I – ALL PUBLICATIONS (EXCEPT RPSTL AND SC/SM) AND BLANK FORMS

PUBLICATION/FORM NUMBER	DATE	TITLE
TM Number	*Date of the TM*	*Title of the TM*

ITEM	PAGE	PARA-GRAPH	LINE	FIGURE NO.	TABLE	RECOMMENDED CHANGES AND REASON (Exact wording of recommended change must be given)
	0007-3					*Figure 2, Item 9 should show a lockwasher. Currently shows a flat washer.*
	0018-2					*Cleaning and inspection, Step 6, reference to governor support pin (14) is wrong reference. Reference should be change to (12).*

SAMPLE

TYPED NAME, GRADE OR TITLE	TELEPHONE EXCHANGE/AUTOVON, PLUS EXTENSION	SIGNATURE
Your Name	*Your Phone Number*	*Your Signature*

TO *(Forward direct to addressee listed in publication)*	**FROM** *(Activity and location) (Include ZIP Code)*	**DATE**
U.S. Army TACOM Life Cycle Management Command ATTN: AMSTA-LCL-MPP/TECH PUBS 6501 E. 11 Mile Road, Warren, MI 48397-5000	*Your Address*	*Date you filled out this form*

PART II – REPAIR PARTS AND SPECIAL TOOL LISTS AND SUPPLY CATALOGS/SUPPLY MANUALS

PUBLICATION NUMBER	DATE	TITLE
TM Number	*Date of the TM*	*Title of the TM*

PAGE NO.	COLM NO.	LINE NO.	NATIONAL STOCK NUMBER	REFERENCE NO.	FIGURE NO.	ITEM NO.	TOTAL NO. OF MAJOR ITEMS SUPPORTED	RECOMMENDED ACTION

SAMPLE

PART III – REMARKS *(Any general remarks, or recommendations, or suggestions for improvement of publications and blank forms. Additional blank sheets may be used if more space is needed.)*

TYPED NAME, GRADE OR TITLE	TELEPHONE EXCHANGE/AUTOVON, PLUS EXTENSION	SIGNATURE
Your Name	*Your Phone Number*	*Your Signature*

APD V4.00

RECOMMENDED CHANGES TO PUBLICATIONS AND BLANK FORMS For use of this form, see AR 25-30; the proponent agency is OAASA	Use Part II *(reverse)* for Repair Parts and Special Tool Lists (RPSTL) and Supply Catalogs/Supply Manuals (SC/SM).	**DATE**
TO *(Forward to proponent of publication or form) (Include ZIP Code)* U.S. Army TACOM Life Cycle Management Command ATTN: AMSTA-LCL-MPP/TECH PUBS 6501 E. 11 Mile Road, Warren, MI 48397-5000	**FROM** *(Activity and location) (Include ZIP Code)*	

PART I – ALL PUBLICATIONS (EXCEPT RPSTL AND SC/SM) AND BLANK FORMS

PUBLICATION/FORM NUMBER	DATE	TITLE
TM 9-2355-106-23-4	19 November 2012	MAINTENANCE MANUAL FOR MINE RESISTANT AMBUSH PROTECTED VEHICLE

	PAGE	PARA-GRAPH	LINE	FIGURE NO.	TABLE	RECOMMENDED CHANGES AND REASON

TYPED NAME, GRADE OR TITLE	TELEPHONE EXCHANGE/AUTOVON, PLUS EXTENSION	SIGNATURE

TO *(Forward direct to addressee listed in publication)*	**FROM** *(Activity and location) (Include ZIP Code)*	**DATE**
U.S. Army TACOM Life Cycle Management Command ATTN: AMSTA-LCL-MPP/TECH PUBS 6501 E. 11 Mile Road, Warren, MI 48397-5000		

PART II – REPAIR PARTS AND SPECIAL TOOL LISTS AND SUPPLY CATALOGS/SUPPLY MANUALS

PUBLICATION/FORM NUMBER	DATE	TITLE
TM 9-2355-106-23-4	19 November 2012	MAINTENANCE MANUAL FOR MINE RESISTANT AMBUSH PROTECTED VEHICLE

PAGE NO.	COLM NO.	LINE NO.	NATIONAL STOCK NUMBER	REFERENCE NO.	FIGURE NO.	ITEM NO.	TOTAL NO. OF MAJOR ITEMS SUPPORTED	RECOMMENDED ACTION

PART III – REMARKS *(Any general remarks, or recommendations, or suggestions for improvement of publications and blank forms. Additional blank sheets may be used if more space is needed.)*

TYPED NAME, GRADE OR TITLE	TELEPHONE EXCHANGE/AUTOVON, PLUS EXTENSION	SIGNATURE

APD V4.00

RECOMMENDED CHANGES TO PUBLICATIONS AND BLANK FORMS For use of this form, see AR 25-30; the proponent agency is OAASA	Use Part II *(reverse)* for Repair Parts and Special Tool Lists (RPSTL) and Supply Catalogs/Supply Manuals (SC/SM).	**DATE**
TO *(Forward to proponent of publication or form) (Include ZIP Code)* U.S. Army TACOM Life Cycle Management Command ATTN: AMSTA-LCL-MPP/TECH PUBS 6501 E. 11 Mile Road, Warren, MI 48397-5000	**FROM** *(Activity and location) (Include ZIP Code)*	

PART I – ALL PUBLICATIONS (EXCEPT RPSTL AND SC/SM) AND BLANK FORMS

PUBLICATION/FORM NUMBER	DATE	TITLE
TM 9-2355-106-23-4	19 November 2012	MAINTENANCE MANUAL FOR MINE RESISTANT AMBUSH PROTECTED VEHICLE

ITEM	PAGE	PARA-GRAPH	LINE	FIGURE NO.	TABLE	RECOMMENDED CHANGES AND REASON

TYPED NAME, GRADE OR TITLE	TELEPHONE EXCHANGE/AUTOVON, PLUS EXTENSION	SIGNATURE

TO *(Forward direct to addressee listed in publication)*	**FROM** *(Activity and location) (Include ZIP Code)*	**DATE**
U.S. Army TACOM Life Cycle Management Command ATTN: AMSTA-LCL-MPP/TECH PUBS 6501 E. 11 Mile Road, Warren, MI 48397-5000		

PART II – REPAIR PARTS AND SPECIAL TOOL LISTS AND SUPPLY CATALOGS/SUPPLY MANUALS

PUBLICATION/FORM NUMBER	DATE	TITLE
TM 9-2355-106-23-4	19 November 2012	MAINTENANCE MANUAL FOR MINE RESISTANT AMBUSH PROTECTED VEHICLE

PAGE NO.	COLM NO.	LINE NO.	NATIONAL STOCK NUMBER	REFERENCE NO.	FIGURE NO.	ITEM NO.	TOTAL NO. OF MAJOR ITEMS SUPPORTED	RECOMMENDED ACTION

PART III – REMARKS *(Any general remark, or recommendations, or suggestions for improvement of publications and blank forms. Additional blank sheets may be used if more space is needed.)*

TYPED NAME, GRADE OR TITLE	TELEPHONE EXCHANGE/AUTOVON, PLUS EXTENSION	SIGNATURE

APD V4.00

RECOMMENDED CHANGES TO PUBLICATIONS AND BLANK FORMS For use of this form, see AR 25-30; the proponent agency is OAASA	Use Part II *(reverse)* for Repair Parts and Special Tool Lists (RPSTL) and Supply Catalogs/Supply Manuals (SC/SM).	**DATE**
TO *(Forward to proponent of publication or form) (Include ZIP Code)* U.S. Army TACOM Life Cycle Management Command ATTN: AMSTA-LCL-MPP/TECH PUBS 6501 E. 11 Mile Road, Warren, MI 48397-5000	**FROM** *(Activity and location) (Include ZIP Code)*	

PART I – ALL PUBLICATIONS (EXCEPT RPSTL AND SC/SM) AND BLANK FORMS

PUBLICATION/FORM NUMBER	DATE	TITLE
TM 9-2355-106-23-4	19 November 2012	MAINTENANCE MANUAL FOR MINE RESISTANT AMBUSH PROTECTED VEHICLE

ITEM	PAGE	PARA-GRAPH	LINE	FIGURE NO.	TABLE	RECOMMENDED CHANGES AND REASON

TYPED NAME, GRADE OR TITLE	TELEPHONE EXCHANGE/AUTOVON, PLUS EXTENSION	SIGNATURE

TO *(Forward direct to addressee listed in publication)*	**FROM** *(Activity and location) (Include ZIP Code)*	**DATE**
U.S. Army TACOM Life Cycle Management Command ATTN: AMSTA-LCL-MPP/TECH PUBS 6501 E. 11 Mile Road, Warren, MI 48397-5000		

PART II – REPAIR PARTS AND SPECIAL TOOL LISTS AND SUPPLY CATALOGS/SUPPLY MANUALS

PUBLICATION/FORM NUMBER	DATE	TITLE
TM 9-2355-106-23-4	19 November 2012	MAINTENANCE MANUAL FOR MINE RESISTANT AMBUSH PROTECTED VEHICLE

PAGE NO.	COLM NO.	LINE NO.	NATIONAL STOCK NUMBER	REFERENCE NO.	FIGURE NO.	ITEM NO.	TOTAL NO. OF MAJOR ITEMS SUPPORTED	RECOMMENDED ACTION

PART III – REMARKS *(Any general remarks, recommendations, or suggestions for improvement of publications and blank forms. Additional blank sheets may be used if more space is needed.)*

TYPED NAME, GRADE OR TITLE	TELEPHONE EXCHANGE/AUTOVON, PLUS EXTENSION	SIGNATURE

APD V4.00

By Order of the Secretary of the Army:

RAYMOND T. ODIERNO
General, United States Army
Chief of Staff

Official:

JOYCE E. MORROW
Administrative Assistant to the
Secretary of the Army

1229006

By Order of the Secretary of the Air Force:

JANET C. WOLFENBARGER
General, United States Air Force
Commander, AFMC

MARK A. WELSH, III
General, United States Air Force
Chief of Staff

Distribution:

To be distributed in accordance with the initial distribution number (IDN) 381168 requirements for TM 9-2355-106-23-4.

THE METRIC SYSTEM AND EQUIVALENTS

Linear Measure

1 Centimeter = 10 Millimeters = 0.01 Meters = 0.3937 Inches
1 Meter = 100 Centimeters = 1000 Millimeters = 39.37 Inches
1 Kilometer = 1000 Meters = 0.621 Miles

Weights

1 Gram = 0.001 Kilograms = 1000 Milligrams = 0.035 Ounces
1 Kilogram = 1000 Grams = 2.2 Pounds
1 Metric Ton = 1000 Kilograms = 1 Megagram = 1.1 Short Tons

Liquid Measure

1 Milliliter = 0.001 Liters = 0.0338 Fluid Ounces
1 Liter = 1000 Milliliters = 33.82 Fluid Ounces

Square Measure

1 Sq Centimeter = 100 Sq Millimeters = 0.155 Sq Inches
1 Sq Meter = 10,000 Sq Centimeters = 10.76 Sq Feet
1 Sq Kilometer = 1,000,000 Sq Meters = 0.0386 Sq Miles

Cubic Measure

1 Cu Centimeter = 1,000 Cu Millimeters = 0.06 Cu Inches
1 Cu Meter = 1,000,000 Cu Centimeters = 35.31 Cu Feet

Temperature

9/5 C° +32 = F°
5/9 (°F - 32) = °C
212° Fahrenheit is equivalent to 100° Celsius
90° Fahrenheit is equivalent to 32.2° Celsius
32° Fahrenheit is equivalent to 0° Celsius

APPROXIMATE CONVERSION FACTORS

To Change	To	Multiply By
Inches	Centimeters	2.540
Feet	Meters	0.305
Yards	Meters	0.914
Miles	Kilometers	1.609
Sq Inches	Sq Centimeters	6.451
Sq Feet	Sq Meters	0.093
Sq Yards	Sq Meters	0.836
Sq Miles	Sq Kilometers	2.590
Acres	Sq Hectometers	0.405
Cubic Feet	Cubic Meters	0.028
Cubic Yards	Cubic Meters	0.765
Fluid Ounces	Milliliters	29.573
Pints	Liters	0.473
Quarts	Liters	0.946
Gallons	Liters	3.785
Ounces	Grams	28.349
Pounds	Kilograms	0.454
Short Tons	Metric Tons	0.907
Pound-Feet	Newton-Meters	1.356
Pounds per Sq Inch	Kilopascals	6.895
Miles per Gallon	Kilometers per Liter	0.425
Miles per Hour	Kilometers per Hour	1.609

To Change	To	Multiply By
Centimeters	Inches	0.394
Meters	Feet	3.280
Meters	Yards	1.094
Kilometers	Miles	0.621
Sq Centimeters	Sq Inches	0.155
Sq Meters	Sq Feet	10.764
Sq Meters	Sq Yards	1.196
Sq Kilometers	Sq Miles	0.386
Sq Hectometers	Acres	2.471
Cubic Meters	Cubic Feet	35.315
Cubic Meters	Cubic Yards	1.308
Milliliters	Fluid Ounces	0.034
Liters	Pints	2.113
Liters	Quarts	1.057
Liters	Gallons	0.264
Grams	Ounces	0.035
Kilograms	Pounds	2.205
Metric Tons	Short Tons	1.102
Newton-Meters	Pound-Feet	0.738
Kilopascals	Pounds per Sq Inch	0.145
Kilometers per Liter	Miles per Gallon	2.354
Kilometers per Hour	Miles per Hour	0.621

PIN: 087254-000